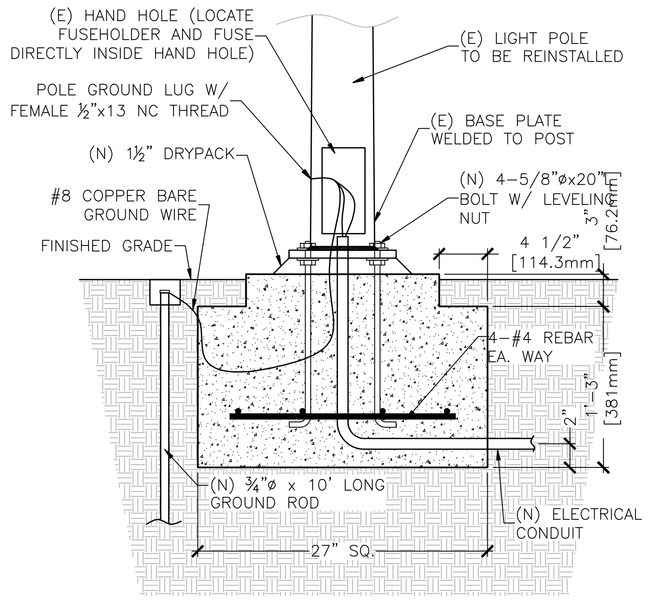

1 ELECTRICAL POST FOOTING DETAIL

SCALE: NTS

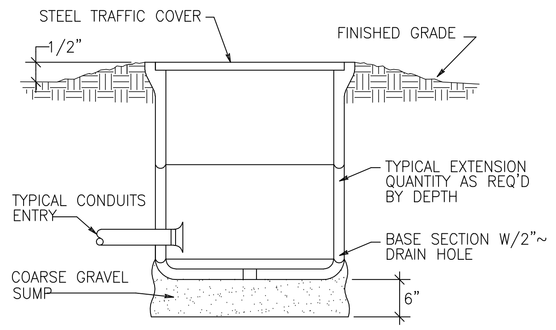

2 PULL BOX DETAIL

SCALE: NTS

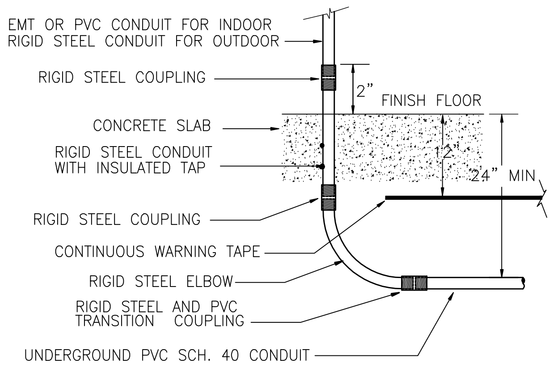

3 OUTDOOR CONDUIT RISER DETAIL

SCALE: NTS

100% SUBMITTAL - FOR CONSTRUCTION

Revisions	Date

CONSULTANTS:

CONSULTING ENGINEERS
JOHN CHONG ENGINEERING
jcengineer@aol.com
(559) 325-9300 • FAX 237-9401
2027 E. DECATUR AVE, FRESNO CA 93720
REGISTERED PROFESSIONAL ENGINEER JOHN S. CHONG E 14419 Exp.6/30/2014 ELECTRICAL STATE OF CALIFORNIA

ARCHITECTS/ENGINEERS:

PAULI ENGINEERING, INC.
2501 W. SHAW AVE., #121, FRESNO, CA 93711
PH: (559)237-4408 - FAX: (559)237-4409
E-MAIL: pauliengineering@sbcglobal.net
www.pauliengineering.com

Drawing Title: DETAILS AND NOTES

Approved: Project Director

Project Title: DEMO BUILDING 10, 13 AND 14

Location: 2615 E. Clinton Ave, Fresno, CA

Date: 12/12/2012 | Checked | Drawn

Project Number: 570-12-571

Building Number: Bldg. 10, 13, 14

Drawing Number: E600

Dwg. of --

Office of Construction and Facilities Management

Department of Veterans Affairs

VA FORM 08-6231