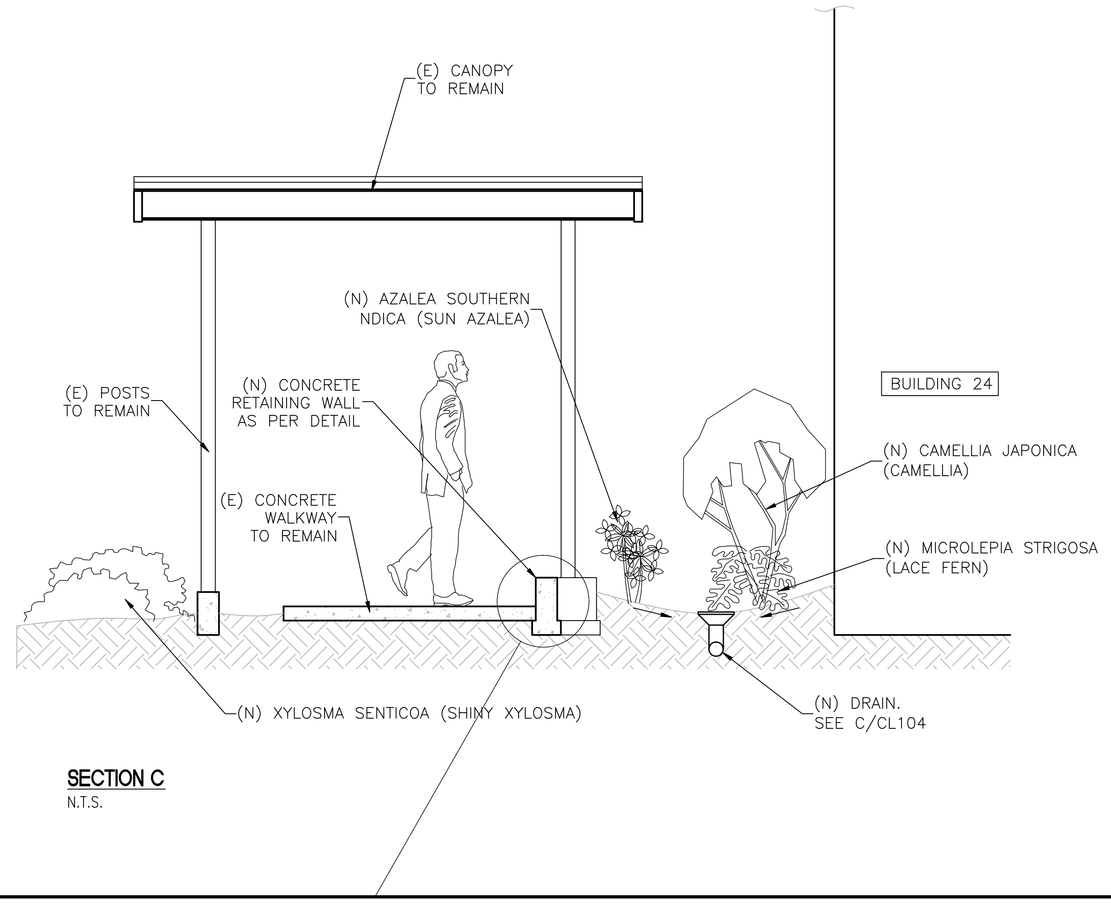

SECTION C
N.T.S.

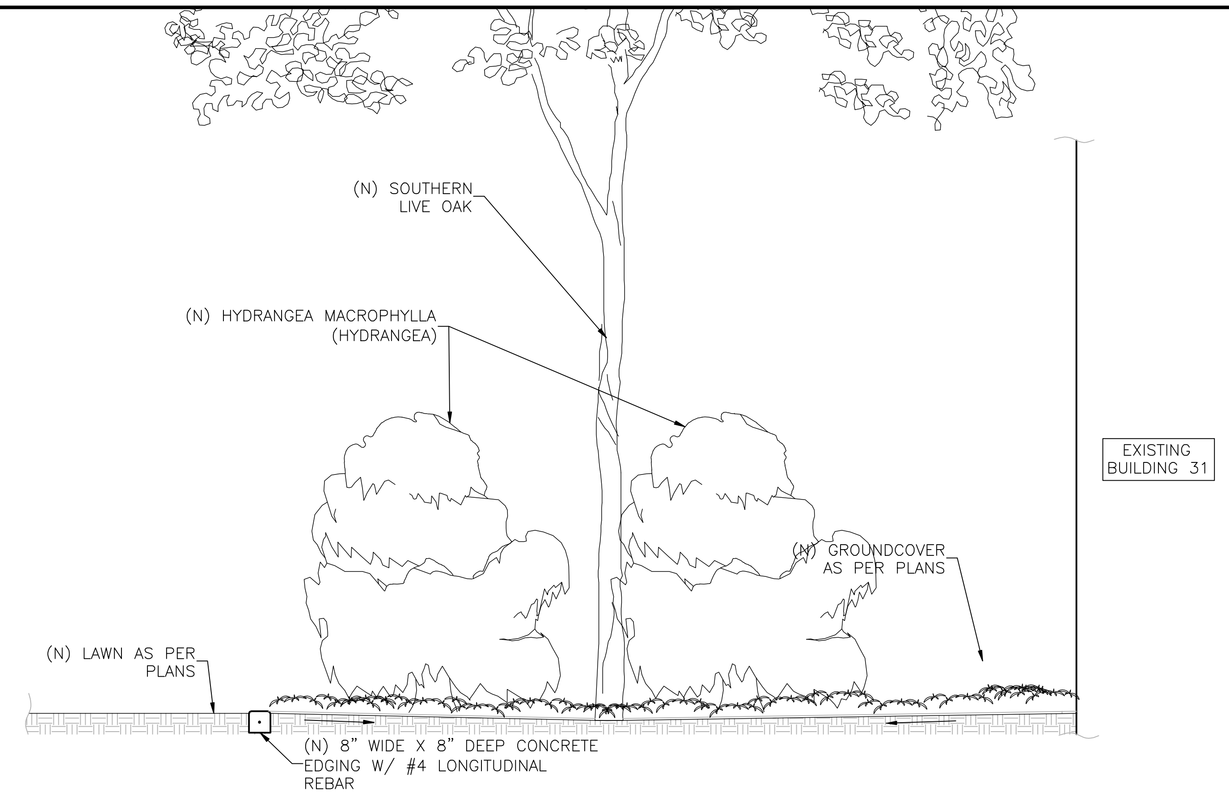

SECTION D - PLANTER
SCALE: 1/2"=1'-0"

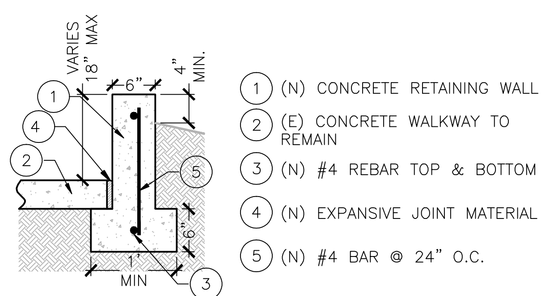

RETAINING WALL DETAIL
SCALE: 1"=1'-0"

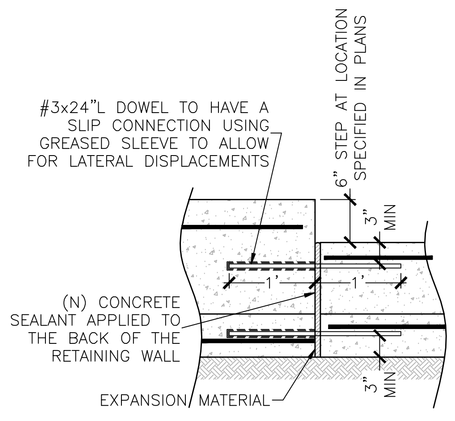

RETAINING WALL ELEVATION AT STEP (TYP.)
SCALE: 1"=1'-0"

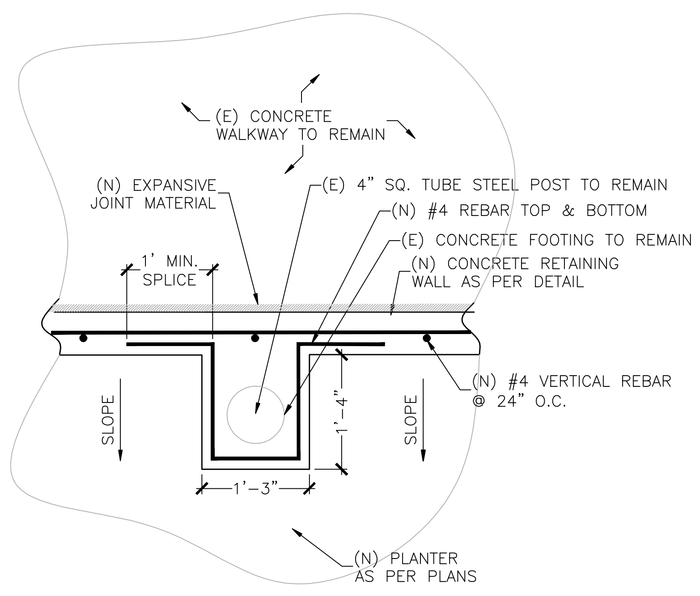

RETAINING WALL PLAN VIEW AT POST (TYP.)
SCALE: 1"=1'-0"

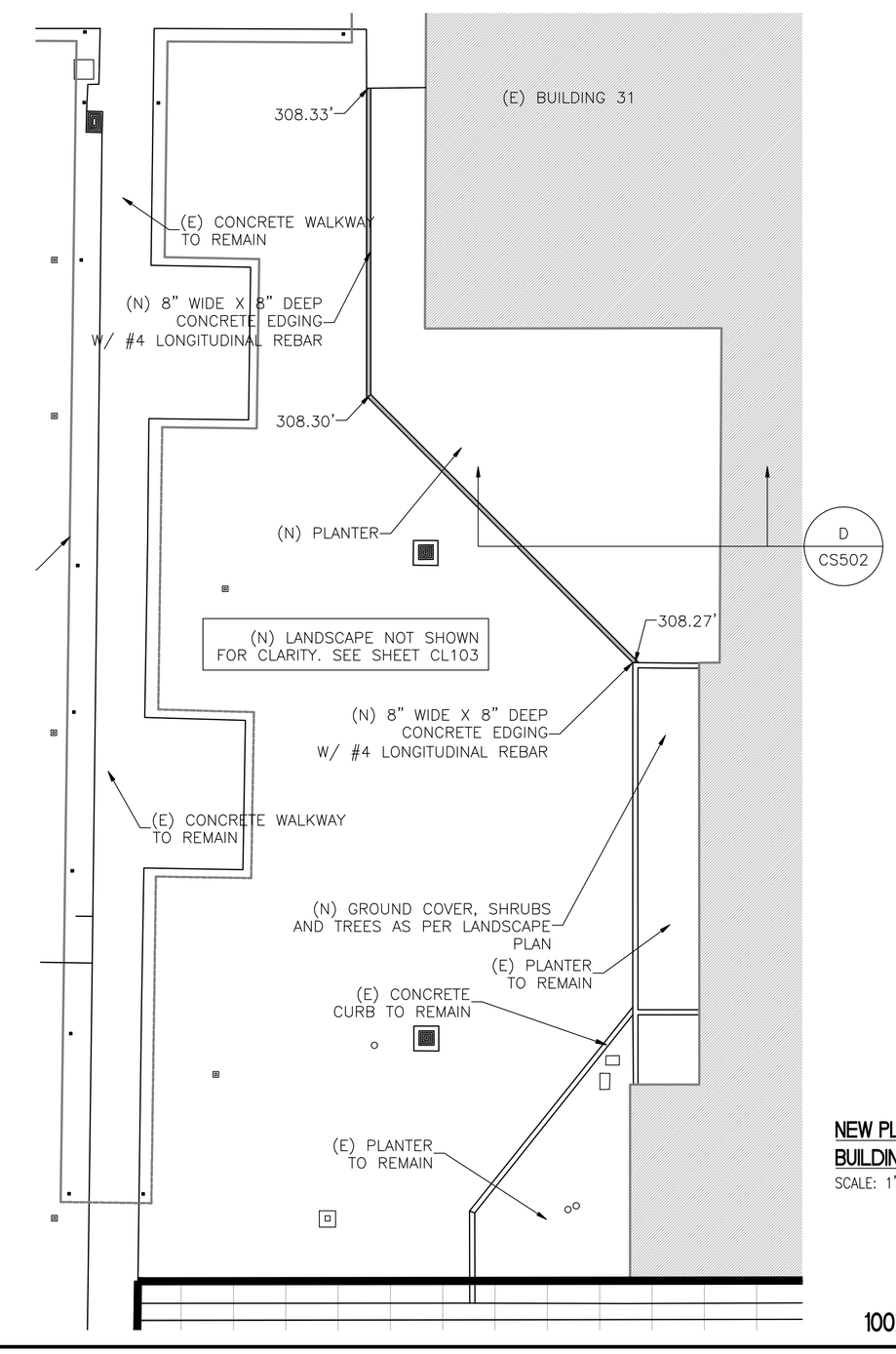

NEW PLANTER AREA WEST BUILDING 31 (PLAN VIEW)
SCALE: 1"=10'-0"

100% SUBMITTAL - FOR CONSTRUCTION

Revisions:	Date

CONSULTANTS:

REGISTERED PROFESSIONAL ENGINEER ESTEBAN T. PAULI No.C51761 Exp. 6-30-14 CIVIL STATE OF CALIFORNIA

ARCHITECT/ENGINEERS:
PAULI ENGINEERING, INC.
2501 W. SHAW AVE, #121, FRESNO, CA 93711
PH: (559)237-4408 - FAX: (559)237-4409
E-MAIL: paulienginee ring@sbcglobal.net
www.paulienginee ring.com

Drawing Title: SECTIONS AND DETAILS

Approved Project Director:

Project Title: SITE IRRIGATION AND LANDSCAPE IMPROVEMENTS

Location: 2615 E. Clinton Ave, Fresno, CA

Date: 1/3/2013 | Checked: | Drawn:

Project Number: 570-12-200

Building Number: CAMPUS

Drawing Number: CS502

Dwg. of --

Office of Construction and Facilities Management

Department of Veterans Affairs

VA FORM 08-6231