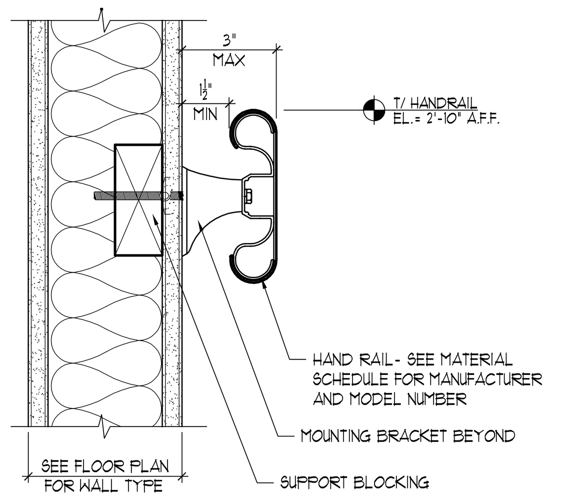

A1 1-AS9 **HAND RAIL** 3"= 1'-0" 900-12

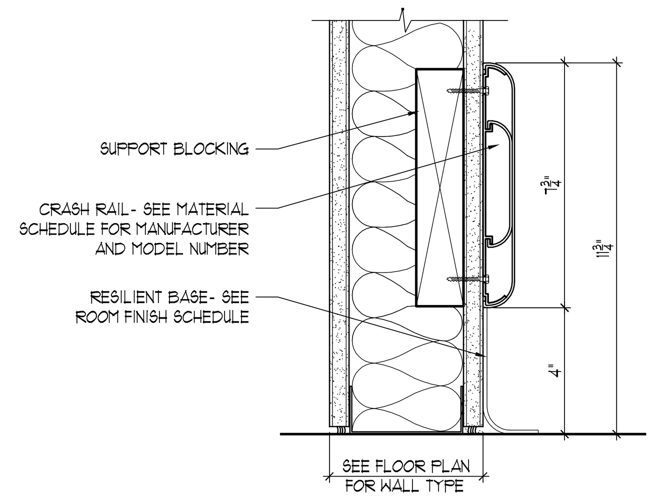

A2 1-AS9 **CRASH RAIL** 3"= 1'-0" 900-06

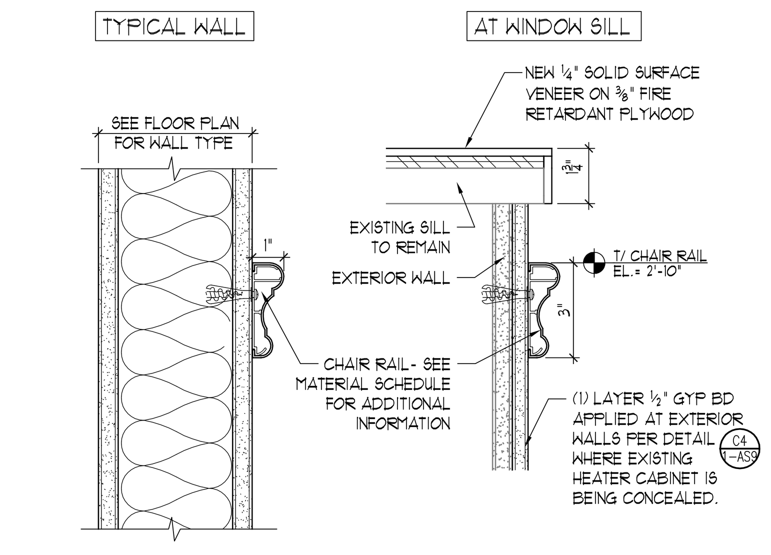

A3 1-AS9 **CHAIR RAIL** 3"= 1'-0" 900-13

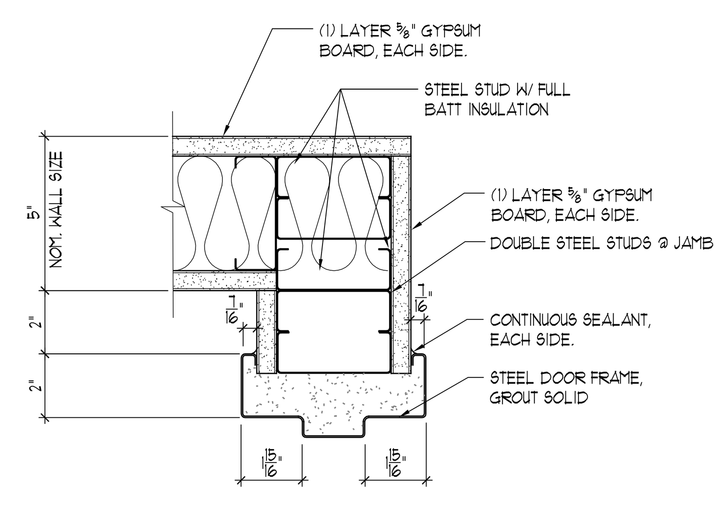

A4 1-AS9 **STEEL FRAME JAMB @ STL STUD PARTITION**
SEE DOOR SCHEDULE FOR LOCATIONS OF OCCURANCE 3" = 1'-0" H5115014

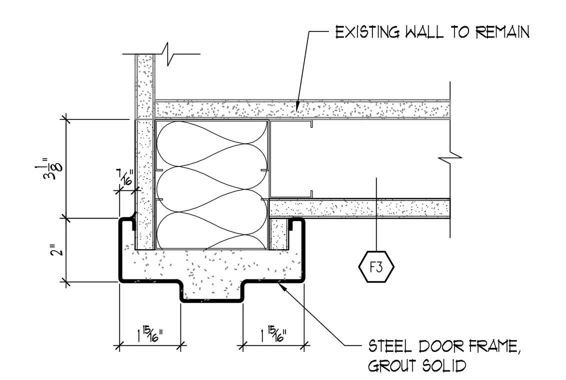

A5 1-AS9 **STEEL FRAME JAMB** 3" = 1'-0" H5112009

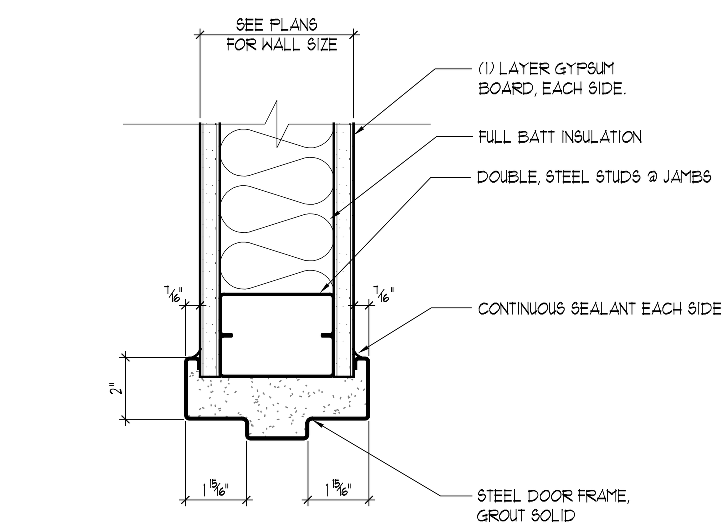

A6 1-AS9 **STEEL FRAME JAMB @ STL STUD PARTITION**
HEAD SIMILAR (SEE DOOR SCHEDULE FOR LOCATIONS OF OCCURANCE) 3" = 1'-0" H5112008

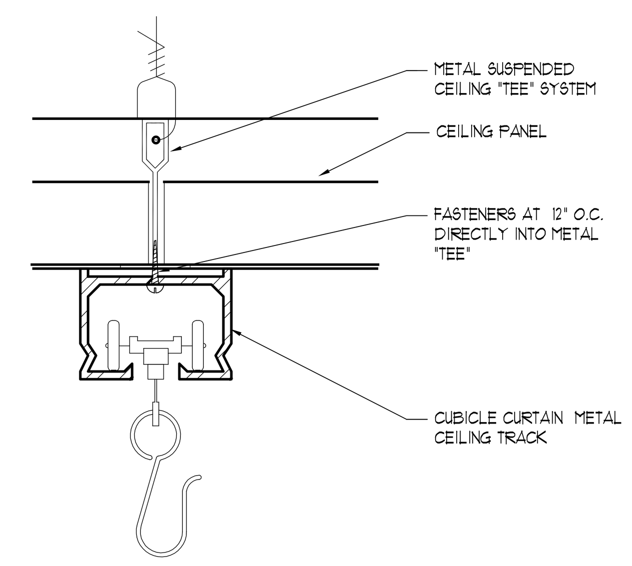

B1 1-AS9 **CUBICLE CURTAIN CEILING TRACK** NTS P4002002

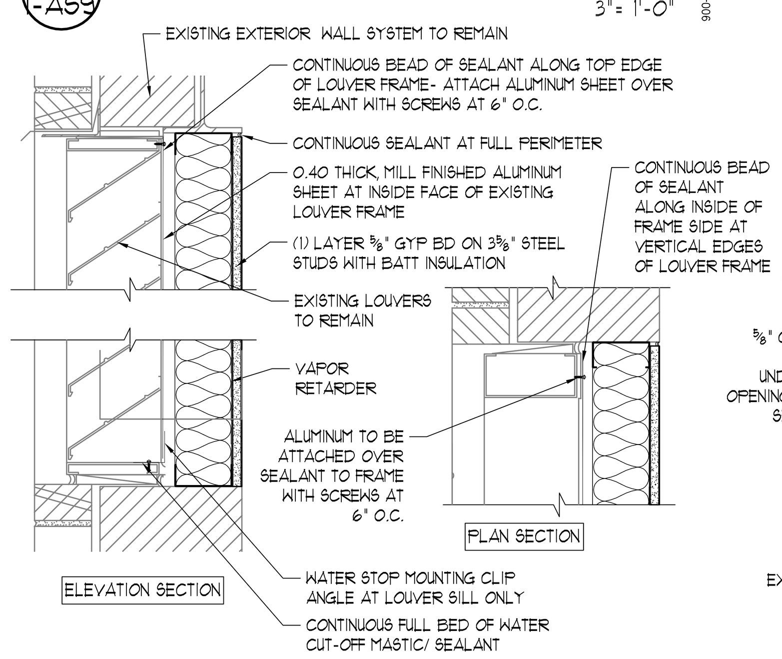

B2 1-AS9 **LOUVER ENCLOSURE DETAIL**
3 INSTANCES WITHIN ROOM 1½"=1'-0" 900-17

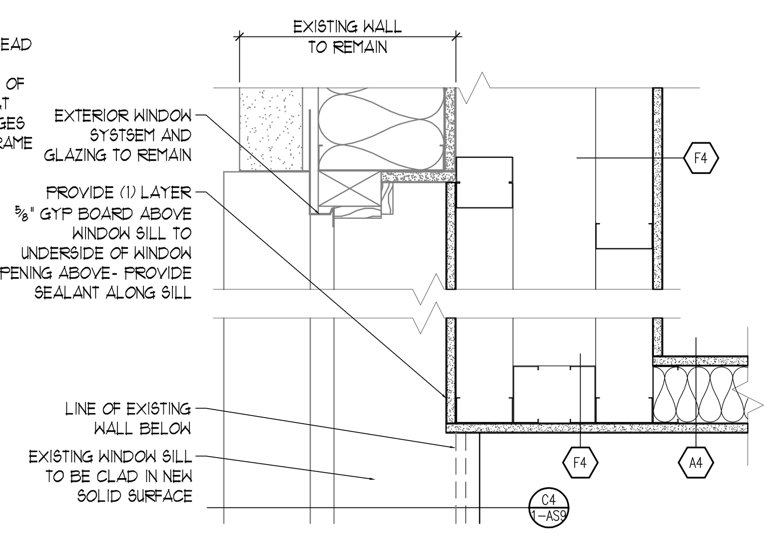

B3 1-AS9 **PARTITION @ EXISTING WINDOW FRAME** 1½"=1'-0" 900-10

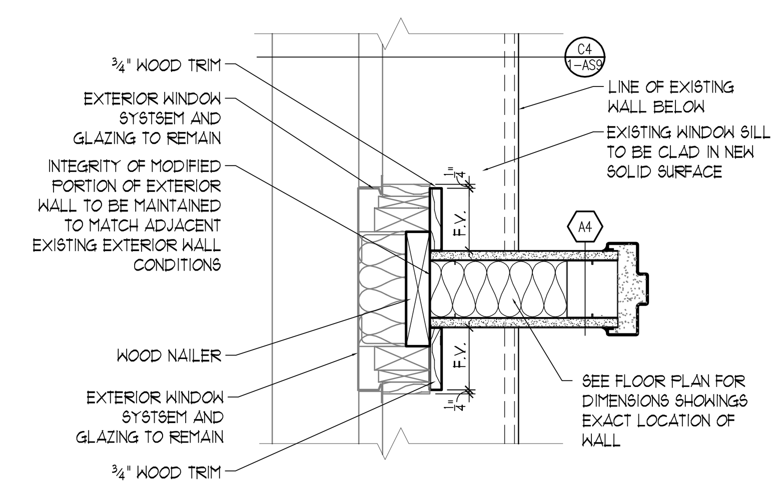

B4 1-AS9 **PARTITION @ EXISTING WINDOW MULLION**
STRAIGHT WALL INTERSECTION 1½"=1'-0" 900-09

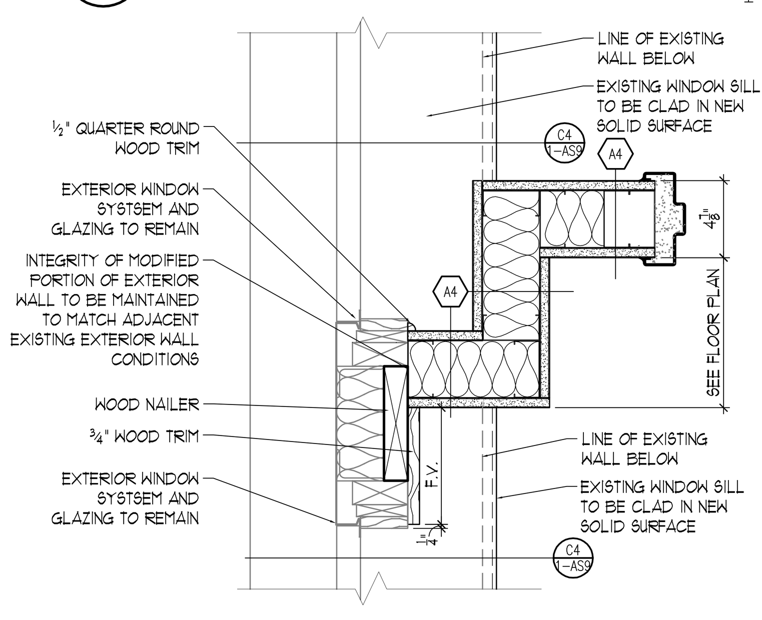

B5 1-AS9 **PARTITION @ EXISTING WINDOW MULLION**
OFFSET WALL 1½"=1'-0" 900-08

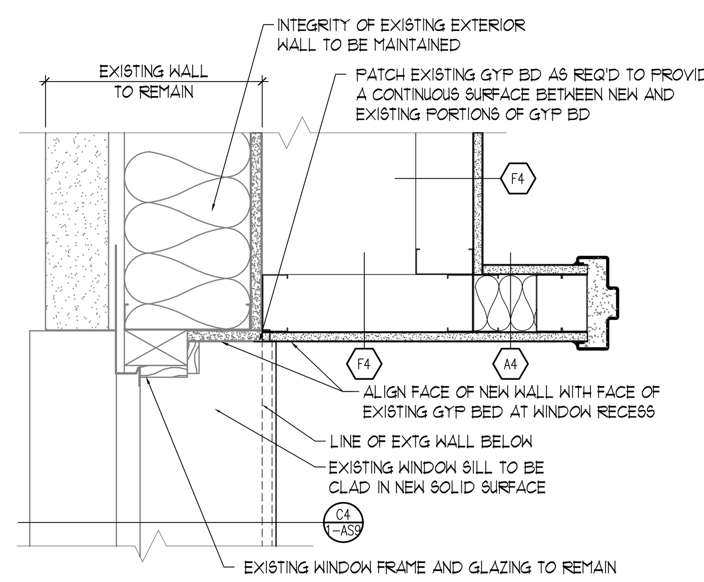

B6 1-AS9 **PARTITION @ EXISTING WINDOW FRAME** 1½"=1'-0" 900-07

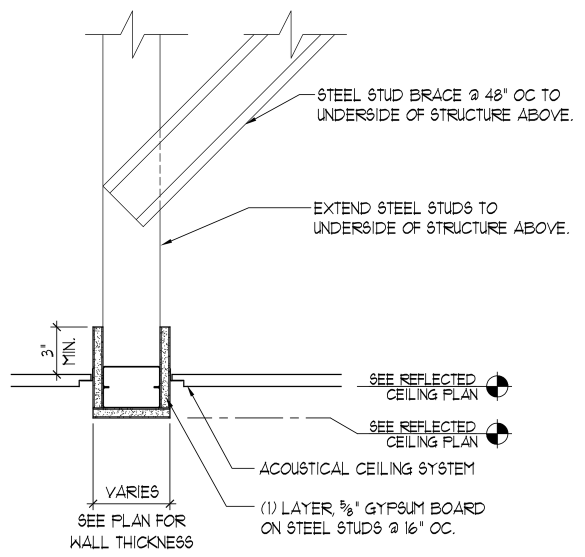

C1 1-AS9 **NARROW BULKHEAD** 1½" = 1'-0" 900-05

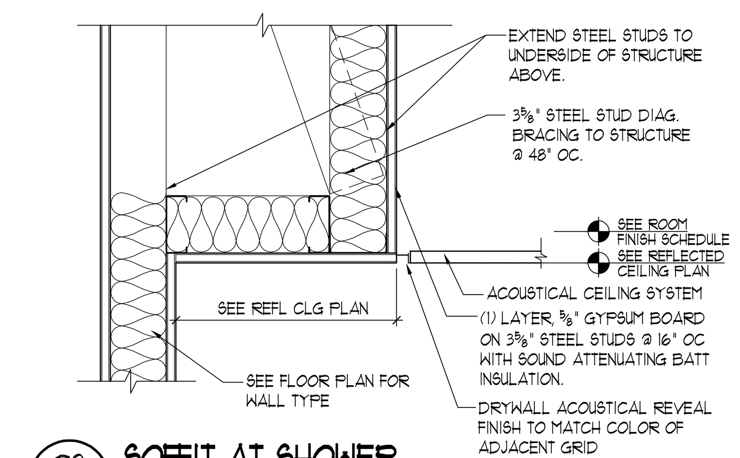

C2 1-AS9 **SOFFIT AT SHOWER** 1½" = 1'-0" M3543000

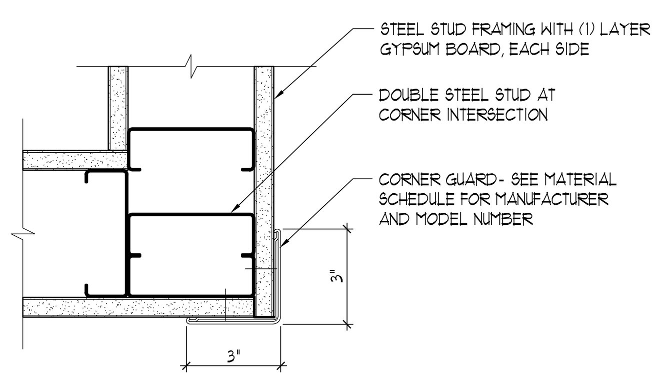

C3 1-AS9 **3" VINYL CORNER GUARD** 3"=1'-0" P3502002

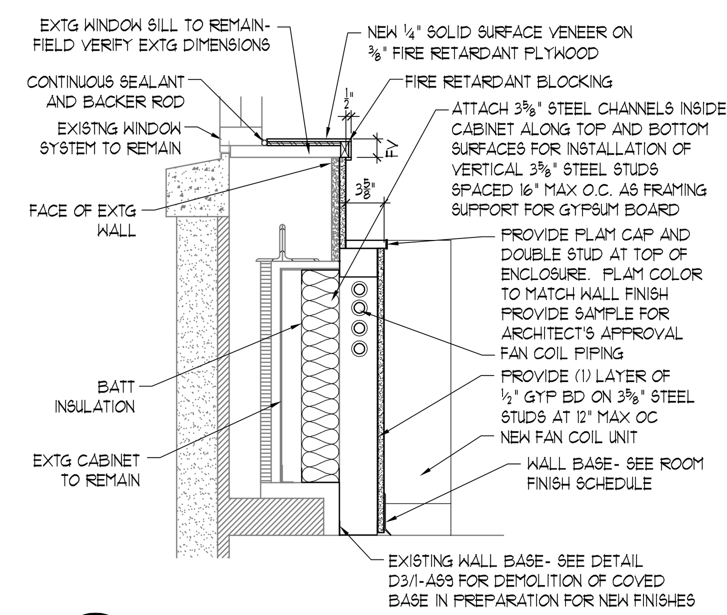

C4 1-AS9 **EXTERIOR WALL DETAIL**
WINDOW SILL AND CABINET ENCLOSURE 1"=1'-0" 900-16

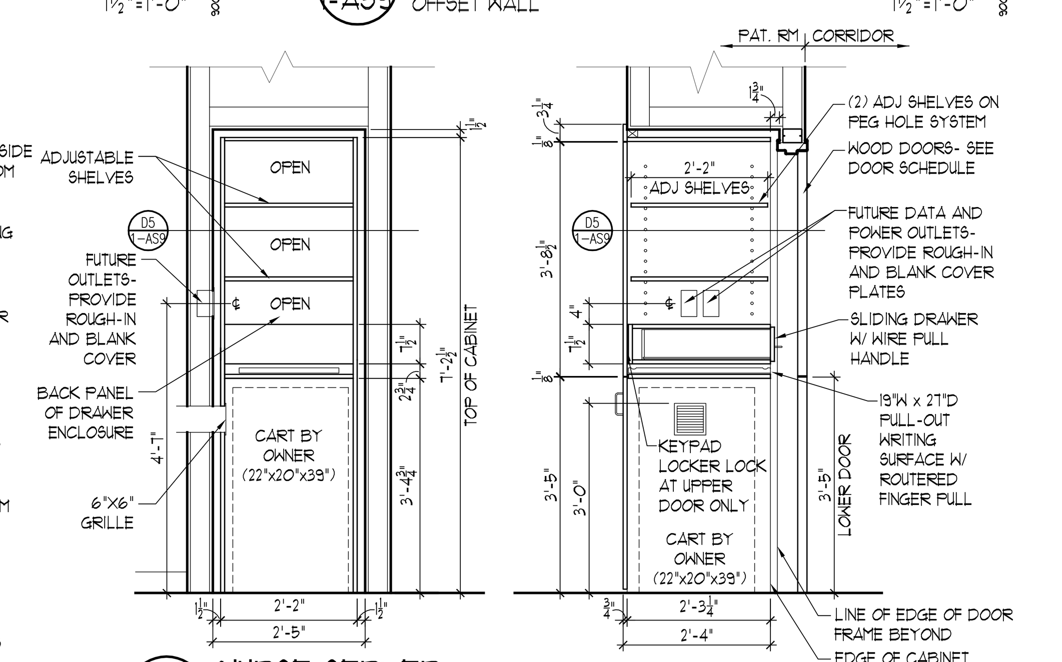

C5 1-AS9 **NURSE SERVER**
SECTION VIEWS ½" = 1'-0" 900-01

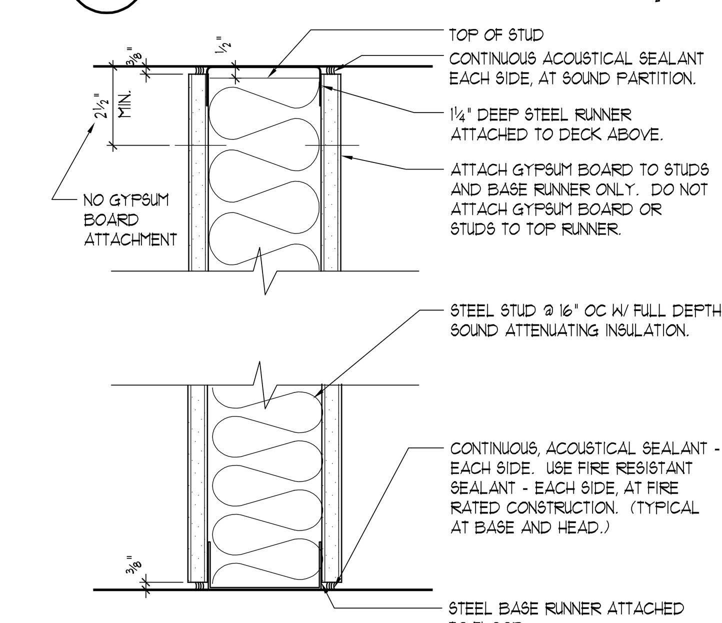

C6 1-AS9 **SOUND PARTITION HEAD AND BASE**
SEE PARTITION TYPES FOR STUD SIZE & COMPOSITION 900-02

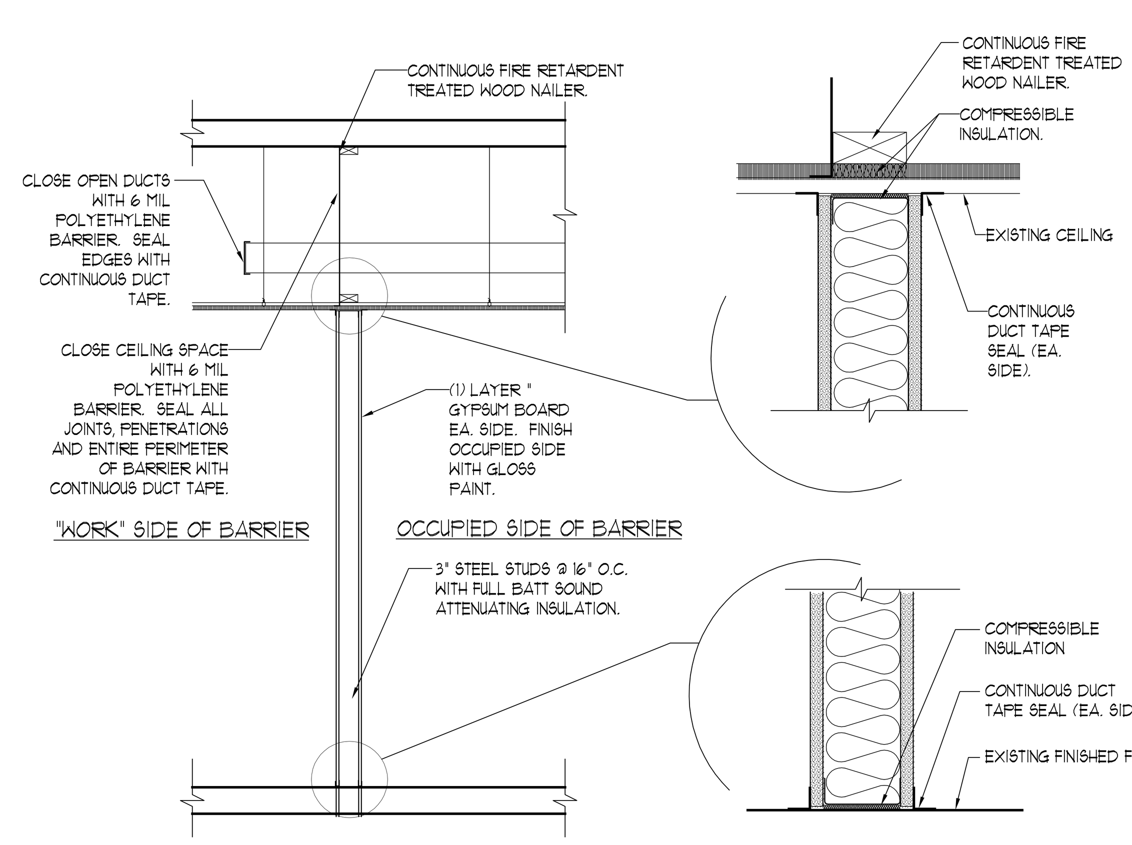

D1 1-AS9 **TYPICAL DUST-PROOF BARRIER** ½" = 1'-0" F5192001

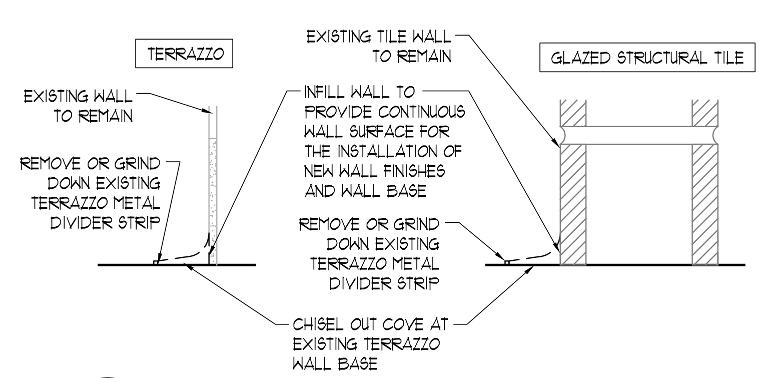

D3 1-AS9 **WALL BASE DEMOLITION DETAILS** 3"= 1'-0" 900-15

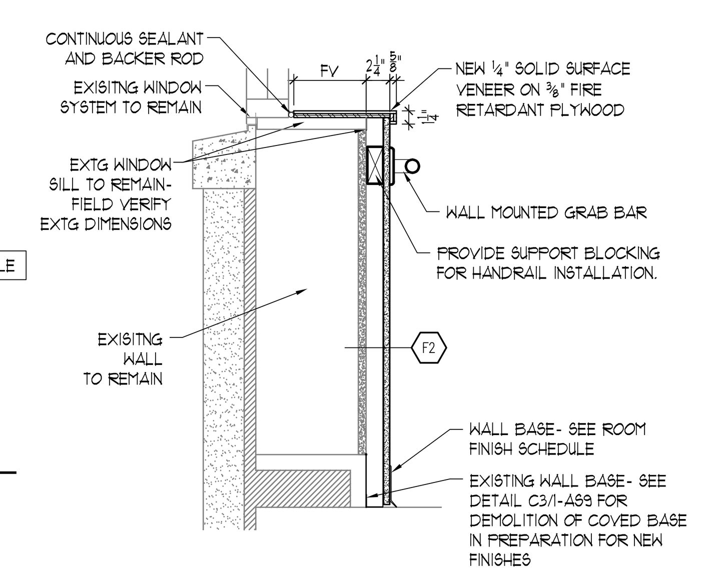

D4 1-AS9 **EXTERIOR WALL DETAIL**
WINDOW SILL AND FURRING- PATIENT TLT RMS 1"=1'-0" 900-18

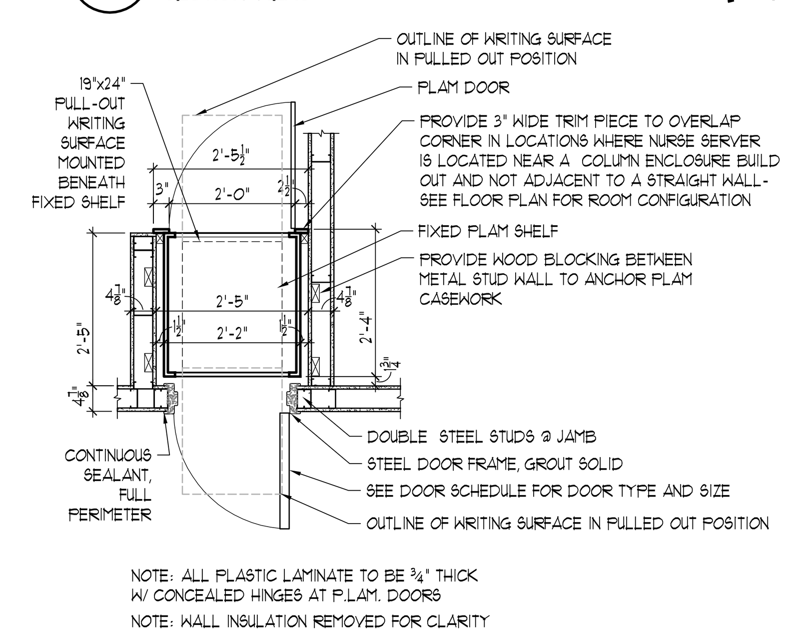

NOTE: ALL PLASTIC LAMINATE TO BE ¾" THICK W/ CONCEALED HINGES AT P.LAM. DOORS
NOTE: WALL INSULATION REMOVED FOR CLARITY

D5 1-AS9 **NURSE SERVER**
PLAN VIEW @ FIXED SHELF ½" = 1'-0" 900-1

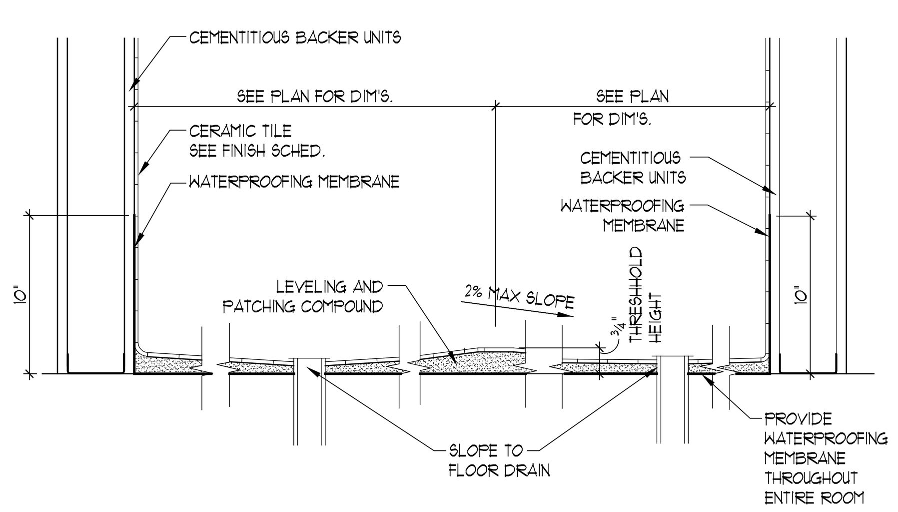

D6 1-AS9 **SHOWER BASE & WET AREAS**
TYPICAL AT ALL PATIENT ROOM TOILETS - SEE DETAIL D1 1-AS9 D6/1-AS9 FOR ROOM SLOPING SECTION 1½" = 1'-0" 900-04

Department of Veteran Affairs
Iowa City VAMC
601 Highway 6W
Iowa City, IA 52246

FULLY SPRINKLERED
CONSTRUCTION DOCUMENTS

Revisions:	Date

KEY PLAN: 7E 7W N

STAMP:

CONSULTANTS:
NIKA Technologies, Inc. Engineering and Management Consultants
11400 Rockville Pike, Ste 505
N. Bethesda, MD 20852
p: 301.770.3520 f: 301.770.3521
www.nikatechnologies.com

ARCHITECT/ENGINEERS:
2310 Crossroads Drive Suite 2000 ▴ Madison WI 53718 ▴ Tel 608 240-9900 ▴ Fax 608 240-9690
11000 West Park Place ▴ Milwaukee WI 53224 ▴ Tel 414 359-3060 ▴ Fax 414 359-3070
Plunkett Raysich Architects, LLP
Intelligent Designs Inspired Results
w w w . p r a r c h . c o m

Drawing Title	Project Title	Project Number
DETAILS	RENOVATE INPATIENT MEDICAL/ SURGICAL WARD, 7E	636A8-10-001
		Building Number: 1
Approved: Project Director	Location: IOWA CITY VA MEDICAL CENTER	Drawing Number: 1-AS9
	Date: 07/07/2009 · Checked: · Drawn: ADB	Dwg. 12 of 44

Office of Construction and Facilities Management
Department of Veterans Affairs

Plunkett Raysich Architects, LLP – P:\07111\CAD\07111 Bldg 1, Floor 5-7-Details.dwg [7E DETAILS] June 09, 2009 – 2:28pm abreitlow
three inches = one foot · one and one half inches = one foot · one inch = one foot · three quarters inch = one foot · one half inch = one foot · three eighths inch = one foot · one quarter inch = one foot · one eighth inch = one foot
VA FORM 08-6231, OCT 1978