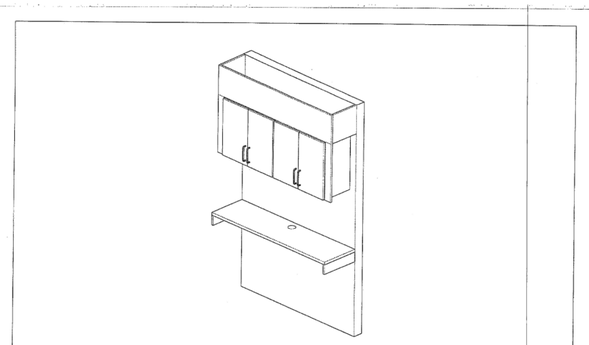

Note: This drawing is an artistic interpretation of the general appearance of the design. It is not meant to be an exact rendition.

amcase AMERICAN MADE CASE | Designed: 8/18/2008 | Printed: 8/18/2008

10 | 03 East Alcove 7E.ofd | 03 East Alcove 7E.ofd | Drawing #: 1

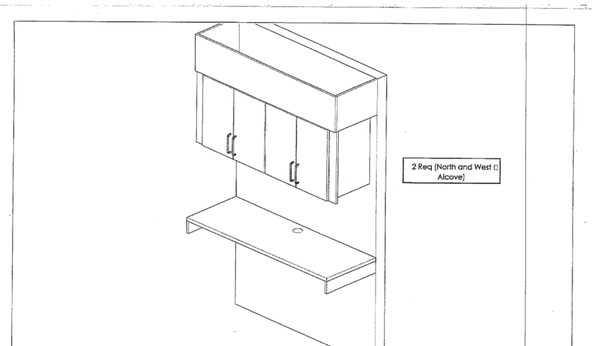

Note: This drawing is an artistic interpretation of the general appearance of the design. It is not meant to be an exact rendition.

amcase AMERICAN MADE CASE | Designed: 8/18/2008 | Printed: 8/18/2008

13 | 04 North and West Alcove | 04 North and West Alcove 7E.ofd | Drawing #: 1

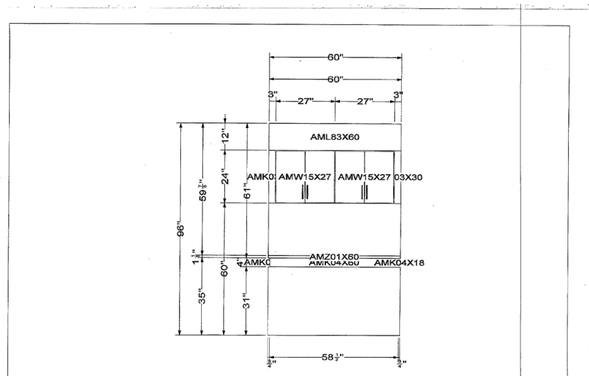

All dimensions ,size designations given are subject to verification on job site and adjustment to fit job conditions.

amcase AMERICAN MADE CASE | This is an original design and must not be released or copied unless applicable fee has been paid or job order placed. | Designed: 8/18/2008 | Printed: 8/18/2008

11 | 03 East Alcove 7E.ofd | El 1 | Drawing #: 1

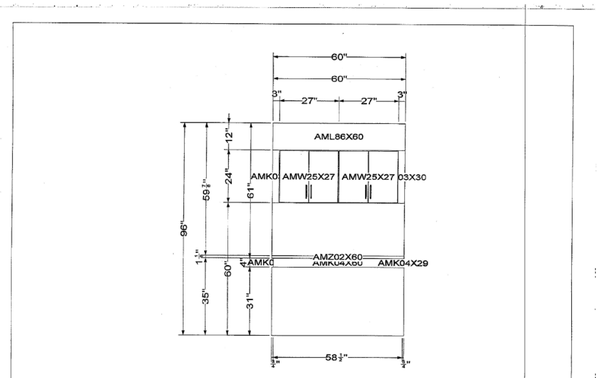

All dimensions ,size designations given are subject to verification on job site and adjustment to fit job conditions.

amcase AMERICAN MADE CASE | This is an original design and must not be released or copied unless applicable fee has been paid or job order placed. | Designed: 8/18/2008 | Printed: 8/18/2008

14 | 04 North and West Alcove.ofd | El 1 | Drawing #: 1

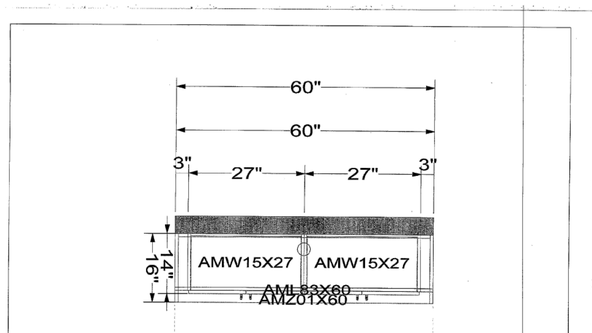

All dimensions ,size designations given are subject to verification on job site and adjustment to fit job conditions.

amcase AMERICAN MADE CASE | This is an original design and must not be released or copied unless applicable fee has been paid or job order placed. | Designed: 8/18/2008 | Printed: 8/18/2008

12 | 03 East Alcove 7E.ofd | All Items | Drawing #: 1

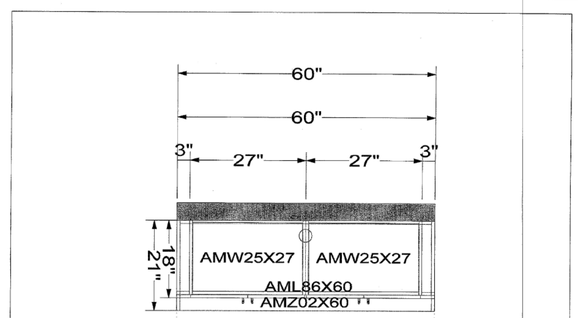

All dimensions ,size designations given are subject to verification on job site and adjustment to fit job conditions.

amcase AMERICAN MADE CASE | This is an original design and must not be released or copied unless applicable fee has been paid or job order placed. | Designed: 8/18/2008 | Printed: 8/18/2008

15 | 04 North and West Alcove 7E.ofd | All Items | Drawing #: 1

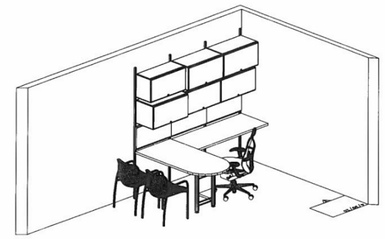

Pigott Inc.	Client Signature	Signature Date	
	Client: VAMC	Project #: 13524.001	
3815 Ingersoll Ave. Des Moines, Iowa 50312	Location: IOWA CITY, IA	Account Executive: BRETT H.	
2345 Blairs Ferry Rd. NE, Suite G Cedar Rapids, Iowa 52402	Project Description: 7 EAST–OFFICE– 7E01	Designer: LINDA R.	
5627 Corey Ave. Davenport, Iowa 52807	Start Date: 05.22.08 / Revision Date: 04.09.09	Released for Install: NO	
	Plan Type: PLAN/3D / Scale: NOT TO SCALE	Sheet #: PLAN/3D	

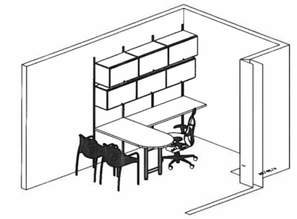

Pigott Inc.	Client Signature	Signature Date	
	Client: VAMC	Project #: 13524.001	
3815 Ingersoll Ave. Des Moines, Iowa 50312	Location: IOWA CITY, IA	Account Executive: BRETT H.	
2345 Blairs Ferry Rd. NE, Suite G Cedar Rapids, Iowa 52402	Project Description: 7 EAST–OFFICE 7E23	Designer: LINDA R.	
5627 Corey Ave. Davenport, Iowa 52807	Start Date: 05.22.08 / Revision Date: 04.09.09	Released for Install: NO	
	Plan Type: PLAN/3D / Scale: NOT TO SCALE	Sheet #: PLAN/3D	

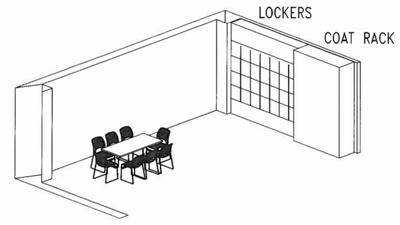

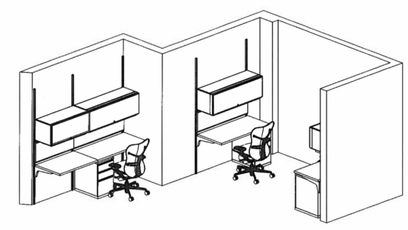

Pigott Inc.	Client Signature	Signature Date	
	Client: VAMC	Project #: 13524.001	
3815 Ingersoll Ave. Des Moines, Iowa 50312	Location: IOWA CITY, IA	Account Executive: BRETT H.	
2345 Blairs Ferry Rd. NE, Suite G Cedar Rapids, Iowa 52402	Project Description: 7 EAST–BREAK ROOM	Designer: LINDA R.	
5627 Corey Ave. Davenport, Iowa 52807	Start Date: 05.22.08 / Revision Date: 05.07.09	Released for Install: NO	
	Plan Type: PLAN/3D / Scale: NOT TO SCALE	Sheet #: PLAN/3D	

Pigott Inc.	Client Signature	Signature Date	
	Client: VAMC	Project #: 13524.001	
3815 Ingersoll Ave. Des Moines, Iowa 50312	Location: IOWA CITY, IA	Account Executive: BRETT H.	
2345 Blairs Ferry Rd. NE, Suite G Cedar Rapids, Iowa 52402	Project Description: 7 EAST–NURSE– 7E02	Designer: LINDA R.	
5627 Corey Ave. Davenport, Iowa 52807	Start Date: 05.22.08 / Revision Date: 05.06.09	Released for Install: NO	
	Plan Type: PLAN/3D / Scale: NOT TO SCALE	Sheet #: PLAN/3D	

MODULAR CASEWORK INFORMATION
NOT TO SCALE

Department of Veteran Affairs
Iowa City VAMC
601 Highway 6W
Iowa City, IA 52246

FULLY SPRINKLERED
CONSTRUCTION DOCUMENTS

Revisions: | Date

KEY PLAN:

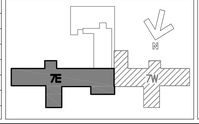

STAMP:

CONSULTANTS:

NIKA Technologies, Inc.
Engineering and Management Consultants
11400 Rockville Pike, Ste 505
N. Bethesda, MD 20852
p: 301.770.3520 f: 301.770.3521
www.nikatechnologies.com

ARCHITECT/ENGINEERS:

Plunkett Raysich Architects LLP
2310 Crossroads Drive Suite 2000 ▲ Madison WI 53718 ▲ Tel 608 240-9900 ▲ Fax 608 240-9690
11000 West Park Place ▲ Milwaukee WI 53224 ▲ Tel 414 359-3060 ▲ Fax 414 359-3070
Intelligent Designs | Inspired Results
www.prarch.com

Drawing Title: PATIENT LIFT INFORMATION	Project Title: RENOVATE INPATIENT MEDICAL/ SURGICAL WARD, 7E	Project Number: 636A8-10-001	Office of Construction and Facilities Management
		Building Number: 1	
Approved: Project Director	Location: IOWA CITY VA MEDICAL CENTER	Drawing Number: 1-CW3	Department of Veterans Affairs
	Date: 07/07/2009 / Checked / Drawn	Dwg. 41 of 44	

VA FORM 08-6231, OCT 1978

Plunkett Raysich Architects, LLP – P:\07111\CAD\07111 Bldg 1, Floor 7E Casework.dwg [7E CASEWORK (3)] May 08, 2009 – 2:57pm dbreitlow
one inch = one foot | one quarter inch = one foot | one eighth inch = one foot | three quarters inch = one foot | one half inch = one foot | three eighths inch = one foot | one and one half inches = one foot | three inches = one foot