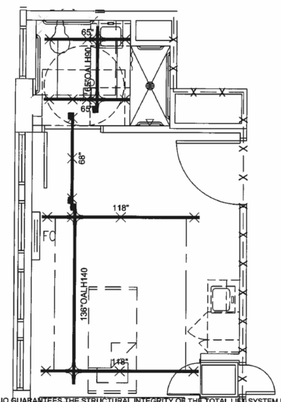

- ALL HARDWARE INCLUDED. (ACCORDING TO STRUCTURE)

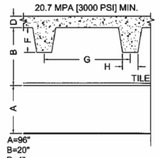

CUSTOMER APPROVAL: _____ DATE: _____

QUANTITY OF ROOMS: 1

LISTING OF ROOM NUMBER(S): RM.. 7E19

RENOVATE INPATIENT MEDICAL/SURGICAL WARD 7E

SAFE WORKING LOAD BELOW LIFT: 600LBS [272KG]
MINIMUM STRUCTURE CAPACITY: 750LBS [340KG]

DATE CREATED (DD-MMM-YYYY): 15-APR-2009

DRAWN BY: Mjsorci | SCALE: 1/4" = 1'
REFERENCE #: QC-415092MS | PAGE: 7 / 17

NOTE: ARJO GUARANTEES THE STRUCTURAL INTEGRITY OF THE TOTAL LIFT SYSTEM,INCLUDING TRACK,BRACING,HANGERS,AND ALL CONNECTIONS TO THE BUILDING STRUCTURE.THE FACILITY MUST VERIFY THE ADEQUACY OF THE BUILDING STRUCTURE TO SUPPORT THE LOADS IMPOSED BY THE LIFT SYSTEM.

THIS LAYOUT HAS BEEN PREPARED WITH SUPPLIED DATA. VERIFICATIONS MUST BE DONE ON SITE.

NOTE: CUTTING OF RAILS ON SITE ONLY

31210.01 REV-0

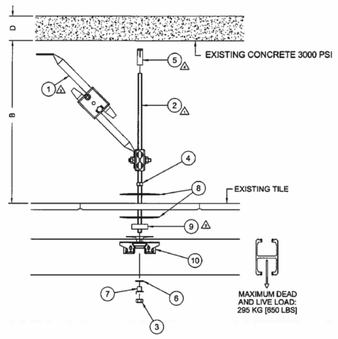

- ALL HARDWARE INCLUDED. (ACCORDING TO STRUCTURE)

SUGGESTED TYPICAL INSTALLATION

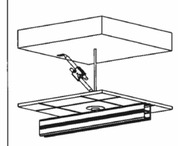

Item #	Part #	Description	Qty
1	700.11350/700.11360	ADJUSTABLE LATERAL BRACE **	*
2	000.00394	THREADED ROD 3/8-16 X 10' ZINC	-
3	000.00402	LOCKNUT STOVER 3/8-16 ZINC	1
4	000.00405	NUT 3/8-16 ZINC	1
5	000.00423	CONCRETE ANCHOR HDI 3/8-16	1
6	000.04430	FLAT WASHER M10 ZINC	1
7	000.04435	TAB WASHER M10	1
8	200.11140	CEILING PLATE ø100MM	2
9	200.11170	12MM KWIKTRAK BRACKET SHIM	1
10	700.11100	TRACK BRACKET KWIKTRAK	1

NOTES:
1. - THREADED ROD LENGHT MUST BE DETERMINED ON SITE. ITEM #2 SHALL HAVE AT LEAST 3 REVOLUTIONS INTO ITEM #5. TORQUE APPLIED SHALL NOT EXCEED 14Nm (11 lbf.ft)
2. - APPROPRIATE COMBINATION OF SHIMS SHALL BE DETERMINED DURING INSTALLATION
3. - INSTALL AS SPECIFIED BY MANUFACTURER IF B ≥12"
4. - SHALL BE INSTALLED AS SPECIFIED BY HILTI SPECIFICATIONS

CUSTOMER APPROVAL: _____ DATE: _____

QUANTITY OF ROOMS:

RENOVATE INPATIENT MEDICAL/SURGICAL WARD 7E

SAFE WORKING LOAD BELOW LIFT: 600LBS [272KG]

DATE CREATED (DD-MMM-YYYY): 15-APR-2009

DRAWN BY: Mjsorci | SCALE: NOT TO SCALE
REFERENCE #: QC-415092MS | PAGE: 9 / 17

31210.03 REV-0

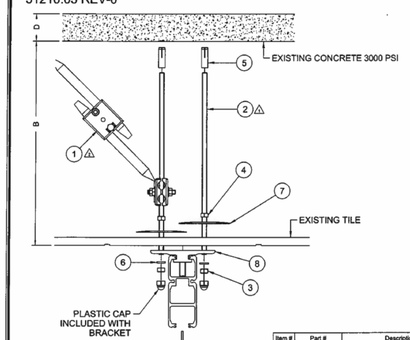

- ALL HARDWARE INCLUDED. (ACCORDING TO STRUCTURE)

SUGGESTED TYPICAL INSTALLATION

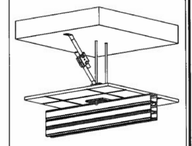

Item #	Part #	Description	Qty
1	- - -	ADJUSTABLE LATERAL BRACE **	-
2	000.00394	THREADED ROD 3/8-16 X 10' ZINC	-
3	000.00402	LOCKNUT STOVER 3/8-16 ZINC	2
4	000.00405	NUT 3/8-16 ZINC	2
5	000.00423	CONCRETE ANCHOR HDI 3/8-16	2
6	000.00425	LOCKWASHER 3/8 ZINC	2
7	200.11140	CEILING PLATE ø100MM	2
8	700.11205	TRACK BRACKET SWL 455KG	1

NOTES:
1. - THREADED ROD LENGHT MUST BE DETERMINE ON SITE. THE THREADED ROD MUST EXCEED THE SADDLE NUT BY 2"
2. - REFER TO LATERAL BRACE REQUIREMENTS (**)

CUSTOMER APPROVAL: _____ DATE: _____

QUANTITY OF ROOMS:

RENOVATE INPATIENT MEDICAL/SURGICAL WARD 7E

SAFE WORKING LOAD BELOW LIFT: 1000LBS [455KG]
MINIMUM STRUCTURE CAPACITY: 1250LBS [570KG]

DATE CREATED (DD-MMM-YYYY): 15-APR-2009

DRAWN BY: Mjsorci | SCALE: NOT TO SCALE
REFERENCE #: QC-4150092MS | PAGE: 11 / 17

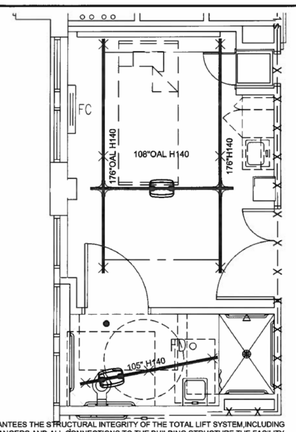

- ALL HARDWARE INCLUDED. (ACCORDING TO STRUCTURE)

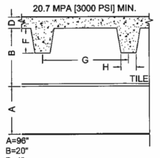

CUSTOMER APPROVAL: _____ DATE: _____

QUANTITY OF ROOMS: 1

LISTING OF ROOM NUMBER(S): RM.. 7E17

RENOVATE INPATIENT MEDICAL/SURGICAL WARD 7E

SAFE WORKING LOAD BELOW LIFT: 1000LBS [455KG]
MINIMUM STRUCTURE CAPACITY: 1250LBS [570KG]

DATE CREATED (DD-MMM-YYYY): 15-APR-2009

DRAWN BY: Mjsorci | SCALE: 1/4" = 1'
REFERENCE #: QC-4150092MS | PAGE: 8 / 17

NOTE: ARJO GUARANTEES THE STRUCTURAL INTEGRITY OF THE TOTAL LIFT SYSTEM,INCLUDING TRACK,BRACING,HANGERS,AND ALL CONNECTIONS TO THE BUILDING STRUCTURE.THE FACILITY MUST VERIFY THE ADEQUACY OF THE BUILDING STRUCTURE TO SUPPORT THE LOADS IMPOSED BY THE LIFT SYSTEM.

THIS LAYOUT HAS BEEN PREPARED WITH SUPPLIED DATA. VERIFICATIONS MUST BE DONE ON SITE.

NOTE: CUTTING OF RAILS ON SITE ONLY

LATERAL BRACE REQUIREMENTS REV-2

- ALL HARDWARE INCLUDED. (ACCORDING TO STRUCTURE)

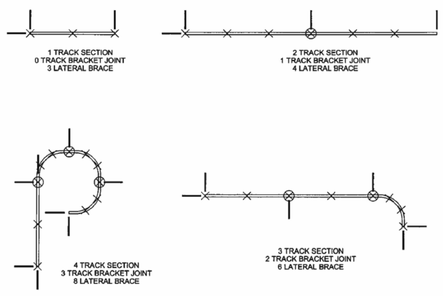

LEGEND
- LATERAL BRACE
- TRACK BRACKET
- TRACK BRACKET JOINT

- MINIMUM 3 LATERAL BRACE
- NUMBER OF LATERAL BRACE = (NUMBER OF TRACK BRACKET JOINT * 2) +2

CUSTOMER APPROVAL: _____ DATE: _____

QUANTITY OF ROOMS:

RENOVATE INPATIENT MEDICAL/SURGICAL WARD 7E

SAFE WORKING LOAD BELOW LIFT: 600LBS [272KG]
MINIMUM STRUCTURE CAPACITY: 750LBS [340KG]

DATE CREATED (DD-MMM-YYYY): 15-APR-2009

DRAWN BY: Mjsorci | SCALE: NOT TO SCALE
REFERENCE #: QC-4150092MS | PAGE: 10 / 17

LATERAL BRACE REQUIREMENTS REV-2

- ALL HARDWARE INCLUDED. (ACCORDING TO STRUCTURE)

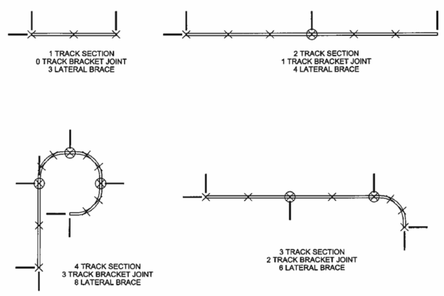

LEGEND
- LATERAL BRACE
- TRACK BRACKET
- TRACK BRACKET JOINT

- MINIMUM 3 LATERAL BRACE
- NUMBER OF LATERAL BRACE = (NUMBER OF TRACK BRACKET JOINT * 2) +2

CUSTOMER APPROVAL: _____ DATE: _____

QUANTITY OF ROOMS:

RENOVATE INPATIENT MEDICAL/SURGICAL WARD 7E

SAFE WORKING LOAD BELOW LIFT: 600LBS [272KG]
MINIMUM STRUCTURE CAPACITY: 750LBS [340KG]

DATE CREATED (DD-MMM-YYYY): 15-APR-2009

DRAWN BY: Mjsorci | SCALE: NOT TO SCALE
REFERENCE #: QC-4150092MS | PAGE: 12 / 17

PATIENT ROOM LIFT SYSTEM INFORMATION
UNDER SEPARATE CONTRACT — NOT TO SCALE

FOR REFERENCE ONLY

Department of Veteran Affairs
Iowa City VAMC
601 Highway 6W
Iowa City, IA 52246

FULLY SPRINKLERED
CONSTRUCTION DOCUMENTS

Revisions | Date

KEY PLAN:

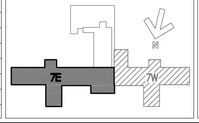

STAMP:

CONSULTANTS:

NIKA Technologies, Inc.
Engineering and Management Consultants
11400 Rockville Pike, Ste 505
N. Bethesda, MD 20852
p: 301.770.3520 f: 301.770.3521
www.nikatechnologies.com

ARCHITECT/ENGINEERS:

Plunkett Raysich Architects LLP
2310 Crossroads Drive Suite 2000 ▲ Madison WI 53718 ▲ Tel 608 240-9900 ▲ Fax 608 240-9690
11000 West Park Place ▲ Milwaukee WI 53224 ▲ Tel 414 359-3060 ▲ Fax 414 359-3070
Intelligent Designs | Inspired Results
www.prarch.com

Drawing Title: PATIENT LIFT INFORMATION	Project Title: RENOVATE INPATIENT MEDICAL/ SURGICAL WARD, 7E		Project Number: 636A8-10-001
			Building Number: 1
Approved: Project Director	Location: IOWA CITY VA MEDICAL CENTER		Drawing Number: 1-PL2
	Date: 07/07/2009	Checked:	Drawn:
			Dwg. 43 of 44

Office of Construction and Facilities Management
Department of Veterans Affairs

VA FORM 08-6231, OCT 1978

Plunkett Raysich Architects, LLP – P:\07111\CAD\07111 Bldg 1, Floor 5-7-Lifts.dwg [7E HEADWALLS (2)] May 08, 2009 – 10:05am dbreitlow