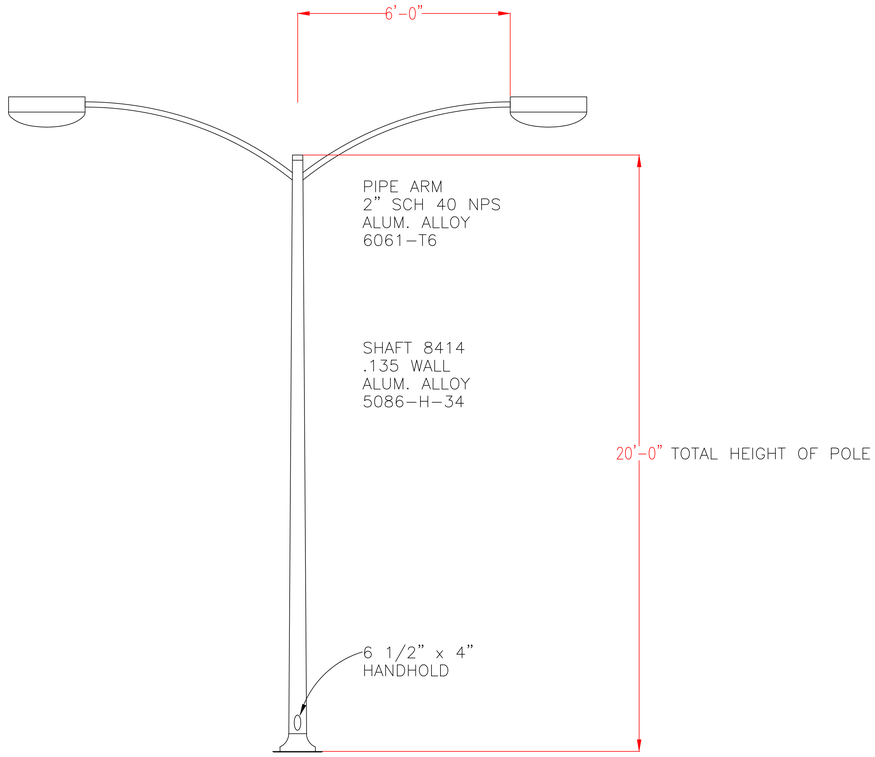

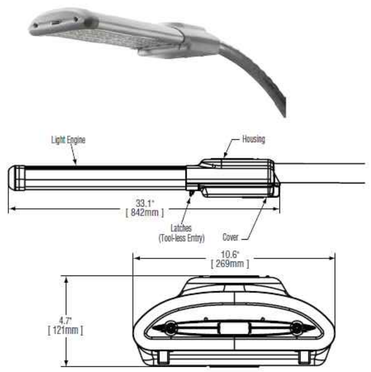

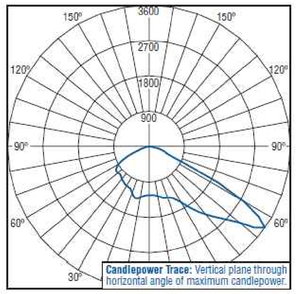

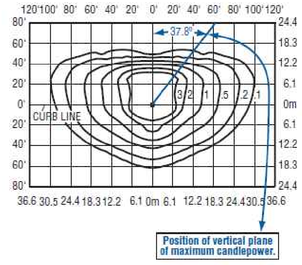

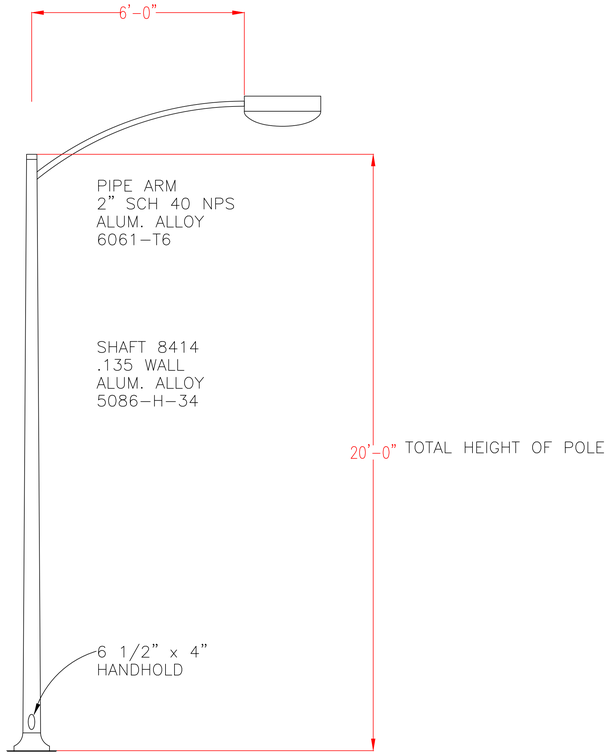

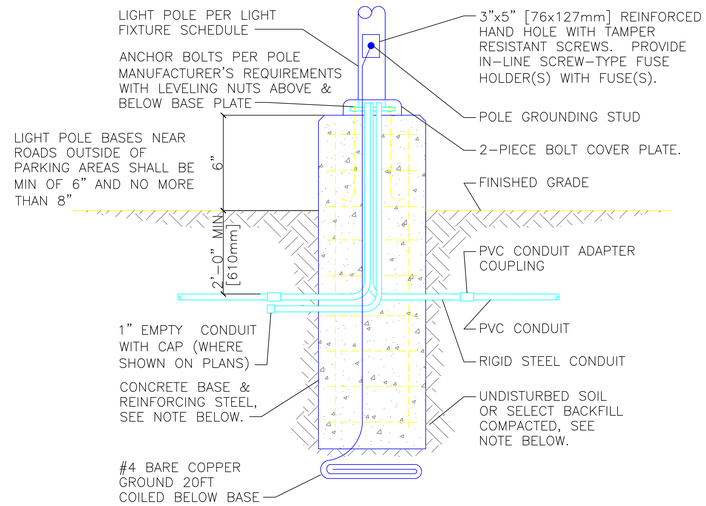

NOTE:

BACKFILL, CONCRETE, REINFORCING STEEL, AND ANCHOR BOLTS ARE SHOWN FOR REFERENCE ONLY. STRUCTURAL DESIGN IS SHOWN ON STRUCTURAL DRAWINGS.

POLE BASE DETAIL

NTS (TURF AREAS)

Revision	Date
REVISION: STREET LIGHT POLE DETAILS	23 NOV 12
REVISION: STREET LIGHT POLE DETAILS	11 FEB 13

RECOMMEND APPROVAL

REQUESTER	Date		
CHIEF OF SERVICE	Date	CHIEF OF STAFF	Date
ASSOC. DIR. PATIENT CARE SVC.	Date	ASSOC. DIR. for OPERATIONS	Date
APPROVAL BY: MEDICAL CENTER DIRECTOR			Date

Drawing Title: LED STREET LIGHTS	Project Title: REPLACE EXTERIOR LIGHTING WITH LED LIGHTS		Date: 14 NOV 2012
Approved: Safety Manager/M&O Supervisor	Building Number: CAMPUS	Checked	Drawn: BLF
Approved: Chief of Facilities Management Svr.	Location: W.G.(Bill) Hefner Medical Center, 1601 Brenner Ave, Salisbury NC 28144		Project No. 659-13-107
			DRAWING NO. E-102
			DWG. 5 OF 8

Department of Veterans Affairs