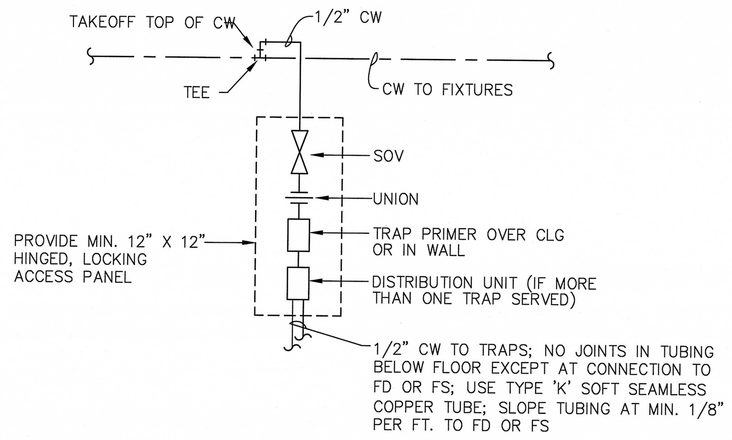

NOTE: INSTALLATION SHALL BE PER MFR'S INSTRUCTION

1 / PL501 TRAP PRIMER DETAIL
SCALE: NONE

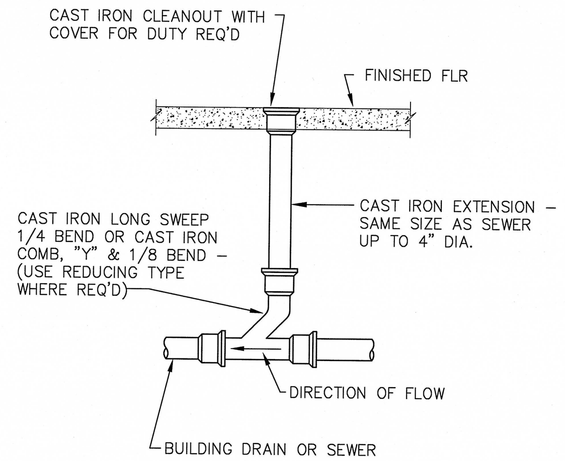

2 / PL501 INTERIOR FLOOR CLEANOUT DETAIL
SCALE: NONE

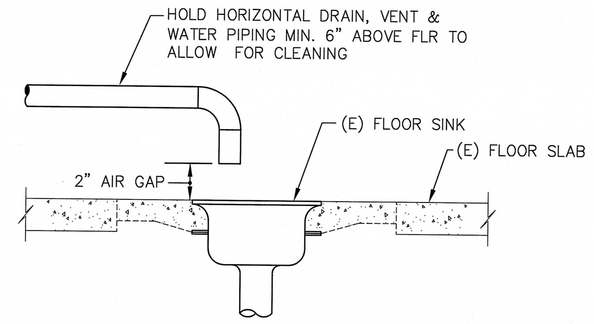

3 / PL501 FLOOR SINK DETAIL
SCALE: NONE

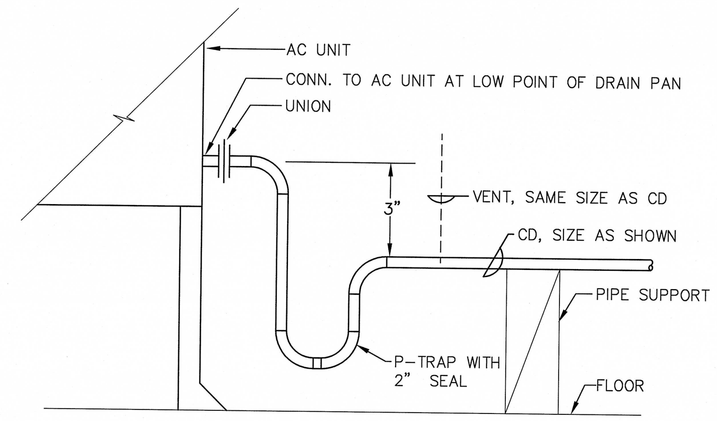

4 / PL501 AC UNIT CD TRAP
SCALE: NONE

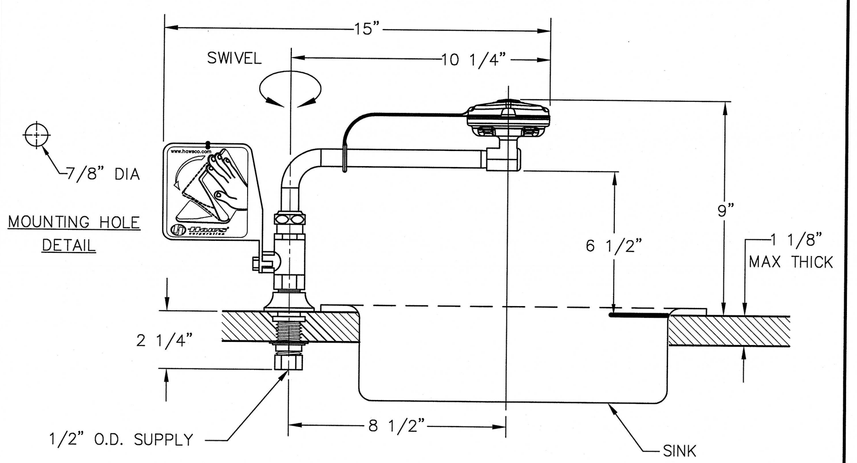

1. THE ANSI Z358.1–2009 STANDARD SPECIFIES EYEWASH NOZZLE HEIGHTS TO BE 33 IN. TO 145 IN. ABOVE THE FLOOR. CENTERLINE OF EYEWASH HEADS MUST BE 6 IN. MIN. AWAY FROM WALL OR NEAREST OBSTRUCTION.
2. DIMENSIONS MAY VARY ±1/2"

5 / PL501 EMERGENCY EYEWASH - DECK MOUNTED
SCALE: NONE

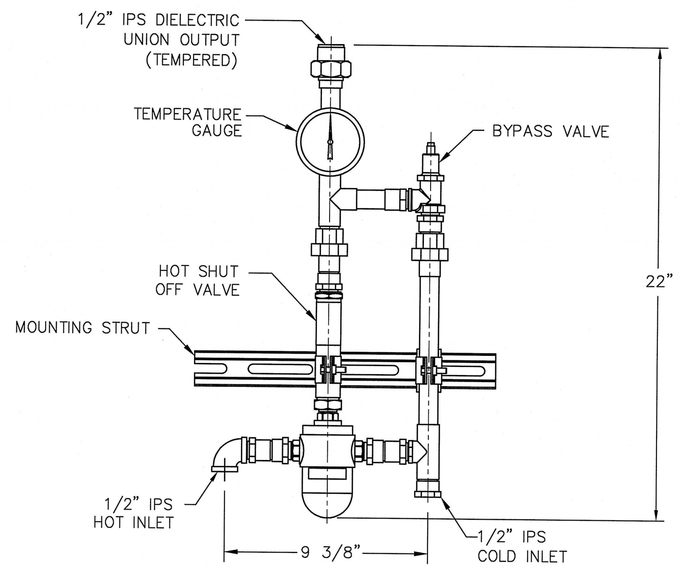

6 / PL501 THERMOSTATIC MIXING VALVE
SCALE: NONE

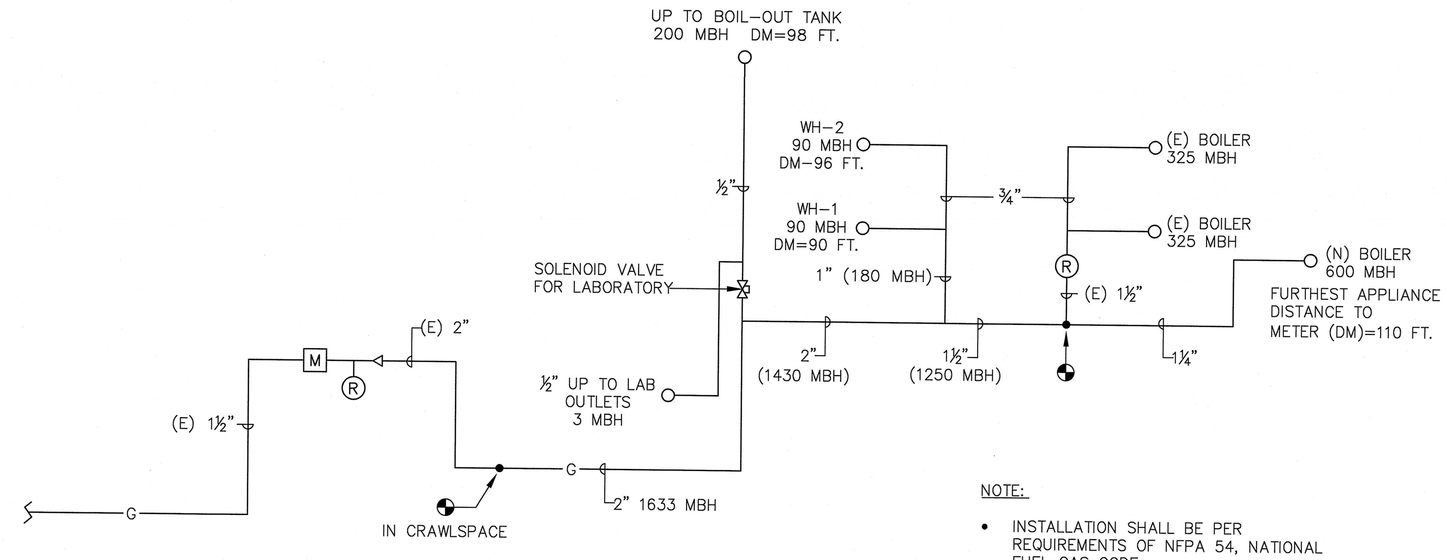

NOTE:

- INSTALLATION SHALL BE PER REQUIREMENTS OF NFPA 54, NATIONAL FUEL GAS CODE.

7 / PL501 GAS PIPING DIAGRAM
SCALE: NONE

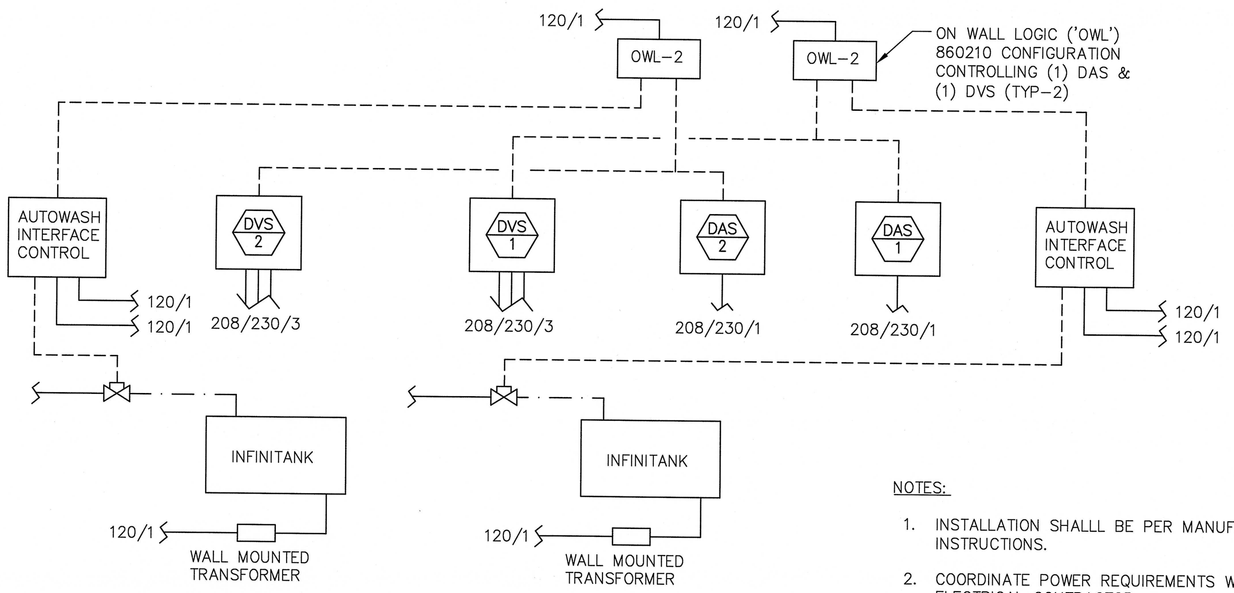

NOTES:

1. INSTALLATION SHALLL BE PER MANUFACTURER'S INSTRUCTIONS.
2. COORDINATE POWER REQUIREMENTS WITH ELECTRICAL CONTRACTOR.

8 / PL501 MEDICAL EQUIPMENT CONTROLS
SCALE: NONE

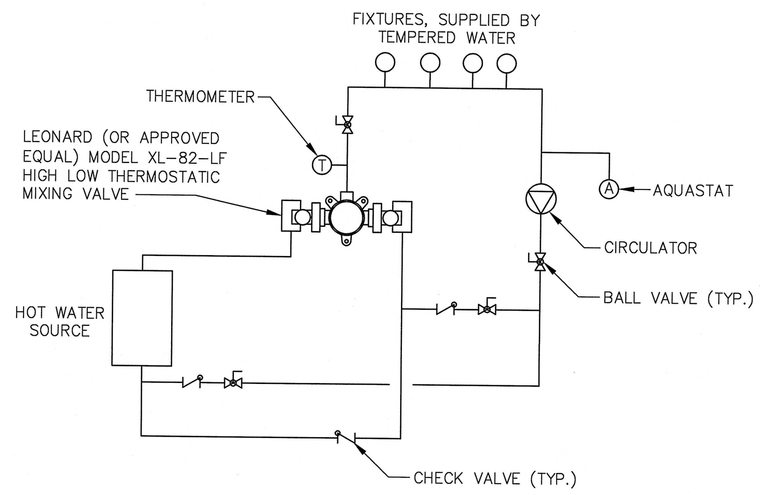

9 / PL501 THERMOSTATIC MIXING VALVE ASSEMBLY
SCALE: NONE

Revisions	Date

CONSULTANTS:

ARCHITECT/ENGINEERS:

K.F. DAVIS ENGINEERING, INC
530 LA GONDA WAY, SUITE E
DANVILLE, CA 94526

REGISTERED PROFESSIONAL ENGINEER — KERT CALVIN DAVIS — No. M26762 — Exp. 9/12 — MECHANICAL — STATE OF CALIFORNIA

Drawing Title	PLUMBING DETAILS
Approved: Project Director	
Project Title	DESIGN OF BUILD BACK BLDG 88 McCLELLAN
Location	McCLELLAN, CA
Date	09/12/2012
Checked	KL
Drawn	MSA
Project Number	612-12-288
Building Number	MCC-88
Drawing Number	PL501
Dwg.	55 of 73

Office of Facilities Management

Department of Veterans Affairs

VA FORM 08-6231, OCT 1978