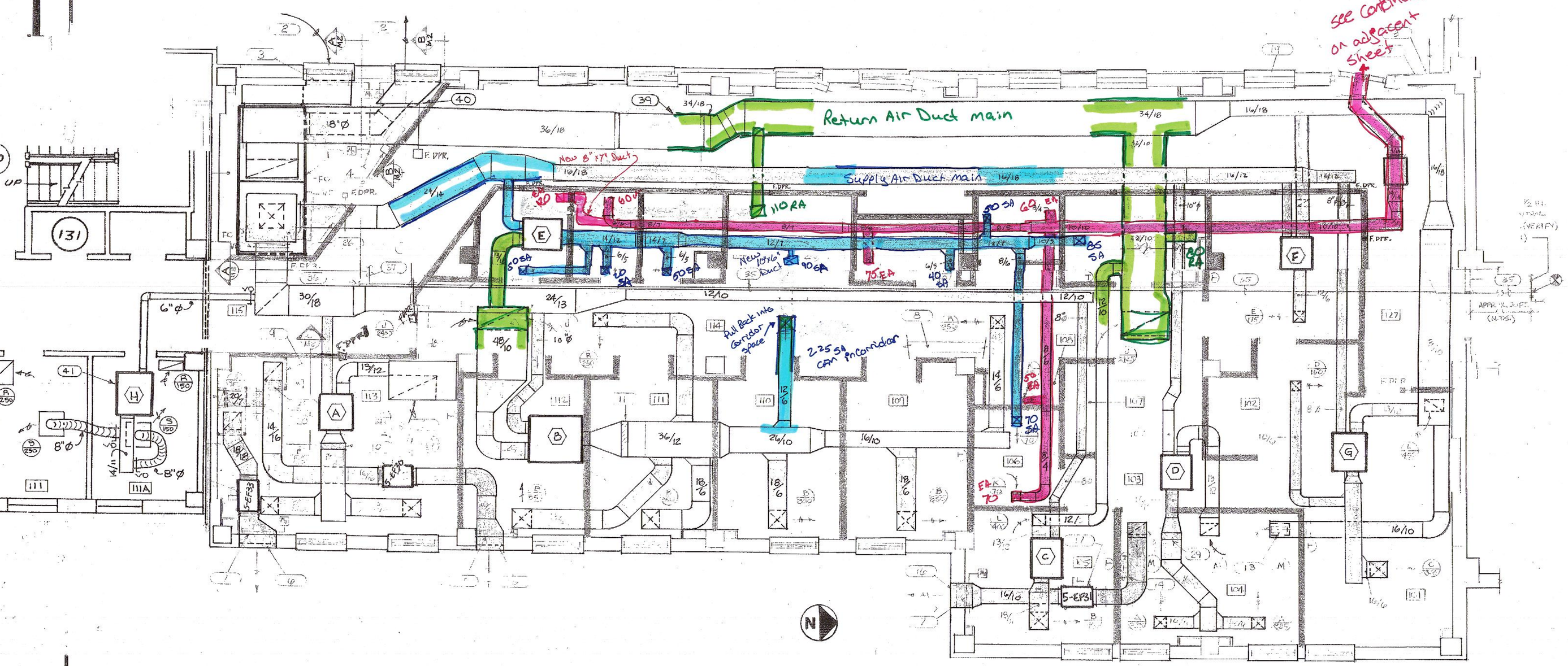

REMODELED FLOOR PLAN - HEATING, VENTILATING & AIR CONDITIONING

SCALE: 1/4" - 1'-0"

Supply Air = Blue
Return Air = Green
Exhaust Air = Red

GENERAL NOTES:

1. All PIPING AND DUCTS IN FINISHED ROOMS OR SPACES SHALL BE CONCEALED IN FURRED CHASES OR SUSPENDED CEILING.
2. PIPES: FIGURE OF DUCT SIZE INDICATES DIMENSION OF FACE SHOWN OR INDICATED.
3. ACCESS PANELS IN SUSPENDED CEILINGS ARE REQUIRED FOR ALL VALVES, TRAPS, DAMPERS, CLEANOUTS, CONTROLS, ETC., AND SHALL BE FURNISHED AND INSTALLED UNDER ARCHITECTURAL SPECIFICATIONS.
4. TOTAL STATIC PRESSURE NOTED IN SCHEDULES INCLUDES DUCT SYSTEM, TERMINAL UNITS, FILTERS, COILS, ETC.
5. FOR TYPICAL STEAM, AND WATER PIPING CONNECTIONS TO EQUIPMENT. SEE STANDARD DETAILS.
6. CEILING DIFFUSER SIZES SHOWN ON FLOOR PLANS ARE NECK SIZES.
7. WATER PIPE CONNECTIONS TO AIR HEATING AND COOLING COILS SHALL BE MADE SO THERE WILL BE COUNTER FLOW BETWEEN WATER AND AIR.
8. REFER TO ARCHITECTURAL REFLECTED CEILING PLAN FOR EXACT LOCATION OF CEILING DIFFUSERS, REGISTERS AND GRILLES.

PLAN NOTES SHEET M2:

1. AIR HANDLING UNIT NO. 5-AC12 SET ON VIBRATION ISOLATOR SPRINGS ON FLOOR.
2. REMOVE EXISTING WINDOW FRAME. NEW 42" X 16" X 6" DEEP WALL COVER INTO EXISTING MASONRY OPENING. VERIFY SIZE.
3. MOTOR OPERATED, OPPOSED ACTING F.A. INTAKE DAMPER.
4. MOTOR OPERATED OPPOSED ACTING, RETURN AIR AND RELIEF AIR DAMPERS.
5. RETURN AIR FAN 5-RF12. SUSPEND WITH ISOLATOR SPRING VIBRATION RODS. SUSPEND FROM OVERHEAD WITH 2 X 2 X 5/16 ANGLE IRON HEADER AND 1/2" ROD. SECURE TO EXISTING CONCRETE OVERHEAD WITH 3/8" EXPANSION BOLTS.
6. OPEN WALL BELOW BEAM. INSTALL 30" X 10" X 4" DEEP WALL LOUVER.
7. MOTOR OPERATED EXHAUST DAMPER. SEE ELECTRICAL PLAN.
8. CORRIDAVE DUCT FABRICATION AND INSTALLATION WITH ELECTRICAL CONTRACTOR TO AVOID RELOCATED CABLE TRAY RUNNING THE LENGTH OF THE SPACE THIS AREA.
9. FABRICATE AND INSTALL AN "L" SHAPED EXHAUST HOOD WITH FRONT LEGS OF 4'-0 AND 2'-0" WIDE AND 2'-0" DEEP. PROVIDE CORNER GUSSET PLATES FOR LIGHT FIXTURES. SEE ELECTRICAL PLAN. SUSPEND FROM OVERHEAD WITH 2 X 2 X 5/16 ANGLE IRON HEADER & 1/2" ROD. SECURE TO EXISTING CONCRETE OVERHEAD WITH 3/8" EXPANSION BOLTS.
10. REHEAT COIL TYPE RC-1.
11. REHEAT COIL TYPE RC-2.
12. EXHAUST FAN 5-EF33. SUSPEND W/ISOLATION SPRING VIBRATION RODS. SUSPEND FROM OVERHEAD WITH 2 X 2 X 5/16 ANGLE IRON HEADER AND 1/2" ROD. SECURE TO EXISTING CONCRETE OVERHEAD WITH 3/8" EXPANSION BOLTS.
13. MOTOR OPERATED RETURN AIR DAMPER.
14. THERMOSTAT, HUMIDISTAT AND OCCUPIED/UNOCCUPIED SWITCH.
15. EXHAUST FAN 5-EF30. SUSPEND W/ISOLATION SPRING VIBRATION RODS. SUSPEND FROM OVERHEAD WITH 2 X 2 X 5/16 ANGLE IRON HEADER AND 1/2" ROD. SECURE TO EXISTING CONCRETE OVERHEAD WITH 3/8" EXPANSION BOLTS.
16. OPEN WALL BELOW BEAM. INSTALL 24" X 10" X 4" DEEP WALL LOUVER.
17. EXHAUST FAN 5-RF11. SUSPEND WITH ISOLATION SPRING VIBRATION RODS. SUSPEND FROM OVERHEAD WITH 2 X 2 X 5/16 ANGLE IRON HEADER AND 1/2" ROD. SECURE TO EXISTING CONCRETE OVERHEAD W/3/8" EXPANSION BOLTS.
18. OPEN WALL BELOW BEAM. INSTALL 18" X 10" X 4" DEEP WALL LOUVER.
19. EXHAUST FAN 5-EF33. SUSPEND WITH ISOLATION VIBRATION RODS. SUSPEND FROM OVERHEAD WITH 2 X 2 X 5/16 ANGLE IRON HEADER AND 1/2" ROD. SECURE TO EXISTING CONCRETE OVERHEAD WITH 3/8" EXPANSION BOLTS.
20. EYE LEVEL EXHAUST CONTROL DAMPER. SEE TEMPERATURE CONTROL ON SHEET M-3.
21. MAKE 16" DUCT OPENING CONNECTION TO LOUVER.
22. BLANK OFF REMAINING LOUVER WITH ALUMINUM FACED PANELS SANDWICHING 2" RIGID INSULATION.
23. MAKE 2" DEEP WATER TIGHT DRIP PAN IN DUCT CONNECTION TO LOUVER.
24. ANGULAR FILTER MIXING BOX WITH TYPE FL-2 FILTERS.
25. SIDE ACCESS FILTER HOUSING WITH TYPE FL-1 FILTERS.
26. DDC CONTROL PANELS.
27. THERMOSTAT TO CONTROL ALL RADIATION ROOM 1113. SEE SHEET M-1.
28. 5-AC12 STARTER AND INVERTER AND FAN POWER SWITCH AND METER ON WALL. SEE ELECTRICAL PLAN.
29. REHEAT COIL TYPE RC-3.

Notes #30 thru 34 have been deleted. Notes #35 thru 38 shall read as follows:

"35. Disconnect and remove existing 3/8" Temp. Control Air Line and replace it with a new 1/2 in. air line.

36. Cap end of new 1/2" temp. control air line for future connection.

37. Temp. control system supply air to pneumatic controls for remodeled area.

38. Hood Exhaust Control Damper. See Temperature Control Sheet M-3."

39. Existing Return air fan removed. Extend existing 34/18 Return air duct & transition to existing 36/18 duct. Power wiring and Temperature control wiring removed back to source.

40. New 18" round Relief air duct. Transition to existing louver ductwork.

41. New VAV unit. External duct insulation on all supply air ductwork. Power wiring connected to nearest available circuit and labeled. Tie into existing Temperature control system.

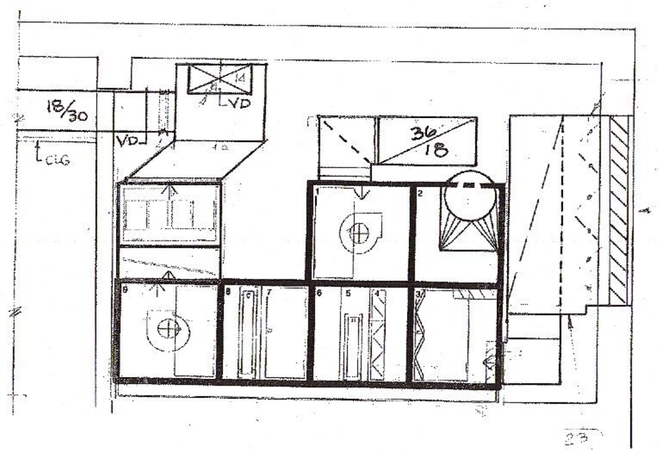

SECTION A/M2
SCALE: 3/8-1-0

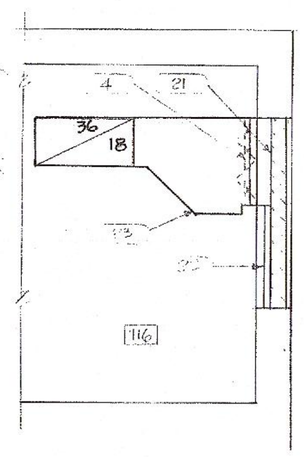

SECTION B/M2
SCALE: 3/8-1-0

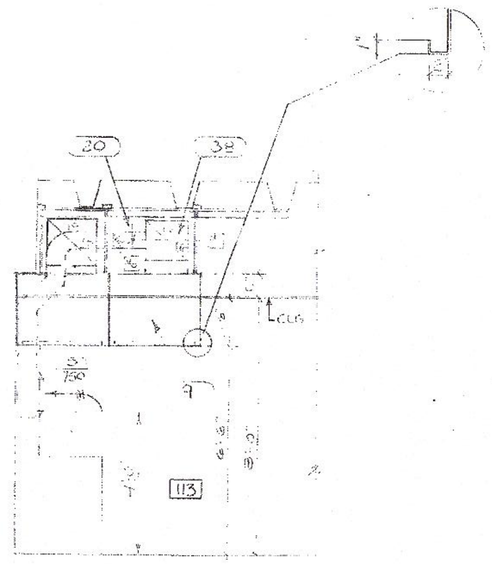

SECTION C/M2
SCALE: 3/8-1-0

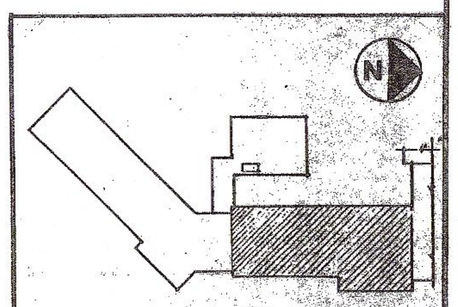

KEY PLAN FOR PROJECT LOCATION
FIRST FLOOR - UNIT NO. 1

Koch Hazard Associates, Ltd. · architects

Kenneth Bastian & Associates - mechanical engineers
Goodyear Engineering Company - electrical engineers

Revisions	Date

Drawing Title	REMODELED FLOOR PLAN HEATING-VENTILATING-AIR CONDITIONING SECTIONS
Approved: Division Chief	
Approved: Service Director	
Project Title	EXPANSION/REMODEL DENTAL SERVICE VETERANS ADMINISTRATION MEDICAL CENTER
Building Number	FIVE
Checked	KB
Drawn	KB
Location	SIOUX FALLS, SOUTH DAKOTA
Date	JULY 30, 1986
Project No.	438-040
DRAWING NO.	5-M2
Dwg. of	

Veterans Administration

VA FORM 08-6231, FEB. 1983

Printed Date: 12/5/2012
Job: VA Dentist vent remod
Product Type: Louver
Mark: LV-132

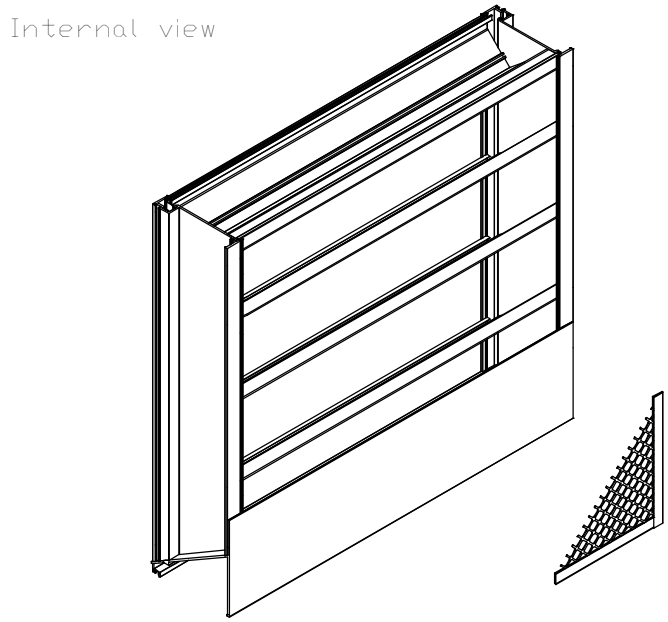

ESD-603

6" Frame

Application & Design

ESD-603 is a weather louver designed to protect air intake and exhaust openings in building exterior walls. Design incorporates drain gutters in the head member and horizontal blades to channel water to the jambs where water is further channeled through vertical downspouts and out at the sloped sill. The ESD-603 is an extremely efficient louver with AMCA LICENSED PERFORMANCE DATA enabling designers to select and apply with confidence.

Width and Height furnished approximately 0.250 in under size.

Construction Features

Frame Depth (in):	6	Frame Thickness (in):	0.081	Louver Material:	Aluminum
Sizing:	Nominal	Fixed Blade Thick. (in):	0.081		
Shape:	Rectangular				
Frame Type:	Channel				
Product Warranty:	1-Year Standard				

Options and Accessories

Bird Screen:	Internal	Bird Screen Type:	Flat Expanded	Bird Screen Mat'l:	Aluminum
Bird Screen Finish:	Mill				
Welded Construction:	No				

Summary

ID #	Tag	Qty.	W (in)	H (in)	Free Area (ft2)	Sect. Wide	Sect. High	Sect. Ship
1-1		1	16.000	16.000	0.62	1	1	1

Performance

ID #	Application	Volume (CFM)	Press. Drop (in wg)	Free Area Velocity (ft/min)	BPWP (ft/min)
1-1	Intake	435	0.082	697	1,027

**Calculated pressure drop does not include the effects of screens, filters or other accessories

Larger openings may require field assembly of multiple louver panels to make up the overall opening size. Individual louver panels are designed to withstand a 25 PSF wind-load (please consult Greenheck if the louvers must withstand higher wind-loads). Design, materials and installation of structural reinforcement required to adequately support large sections or multiple section assemblies within a large opening are not provided by Greenheck. Unless specifically indicated, the following are NOT included in the quote provided: structural steel, installation hardware (anchors, angle clips, continuous angles, shims, fasteners, inserts, backer rod and sealant), field measuring and/or installation, miscellaneous flashing, trim or enclosures, blank off panels, mullion covers or mullion hardware, hinged frames or removable subframes, custom bird/insect screen, 3-coat, metallic and/or exotic paint finishes, bituminous paints for unlike metals, any applicable taxes, stamped and sealed structural calculations or seismic calculations.

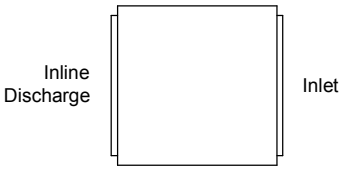

PLAN VIEW

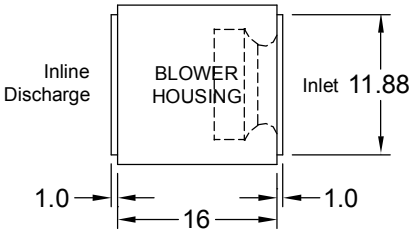

ELEVATION VIEW

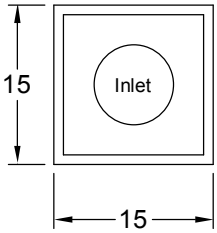

END VIEW

Model: SQ-95-VG

Direct Drive Centrifugal Inline Fan

Standard Construction Features:

- Galvanized steel housing - Backward inclined aluminum wheel - Two bolted access panels - Integral duct connection flanges - Ball bearing motors (sizes 100-160), sleeve bearing motors (sizes 60-95) - Corrosion resistant fasteners

Options & Accessories:

Motor - Vari-Green EC motor w/Mounted Potentiometer Dial
Switch, NEMA-1, Toggle, Junction Box Mounted & Wired
Insulated Housing - 1 in Thick: Fan Housing
Isolators & Brackets (Qty:4), Neoprene Hanging (PN HVI KIT-SQ6-14)(Shipped Loose)

Dimensional

Qty	Weight w/o Accessories (lb)	Weight with Accessories (lb)
1	59	66

Performance

Requested Volume (CFM)	Actual Volume (CFM)	Requested SP (in wg)	Actual SP (in wg)	Fan RPM	Operating Power (hp)	Elevation (ft)	Airstream Temperature (F)	Tip Speed (ft/min)	SE (%)
435	435	0.68	0.68	1717	0.13	0	70	4,888	35.5

Motor

Motor Mounted	Size (hp)	V/C/P	Encl.	Motor RPM	Windings
Yes	1/6	115/60/1	TENV	1725	1

Sound Power by Octave Band

Sound Data	62.5	125	250	500	1000	2000	4000	8000	LwA	dBA	Sones
Inlet	80	79	74	67	61	48	41	40	70	59	9.2
Radiated	79	74	64	57	50	29	22	27	62	51	5.6

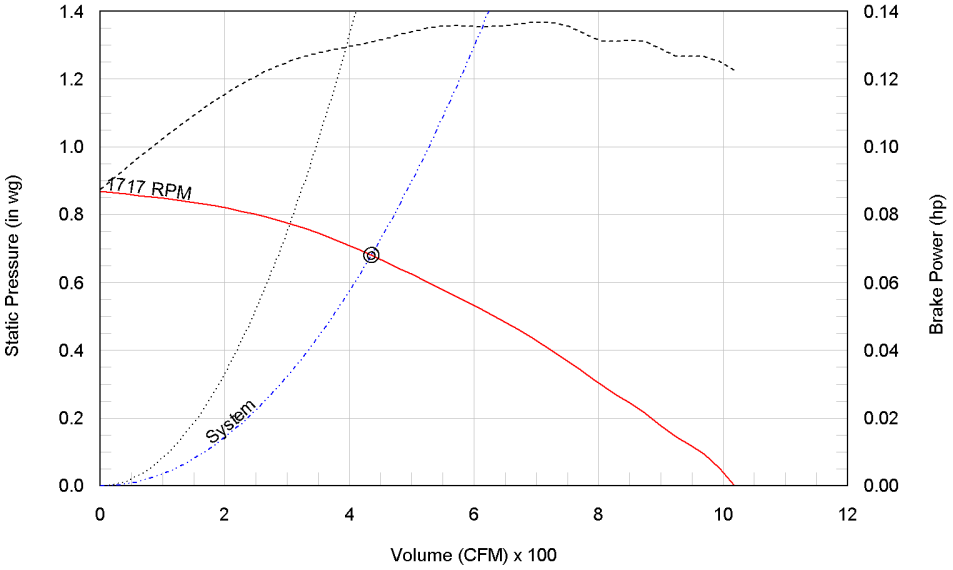

RPM Curve
System Curve
Brake Power Curve
Do not select to the left of this surge curve
Desired operating point
Actual operating point

Notes:

All dimensions shown are in units of in.
*FLA - based on tables 150 or 148 of National Electrical Code 2002. Actual motor FLA may vary, for sizing thermal overload, consult factory.
LwA - A weighted sound power level, based on ANSI S1.4
dBA - A weighed sound pressure level, based on 11.5 dB attenuation per Octave band at 5.0 ft - dBA levels are not licensed by AMCA International
Sones - calculated using AMCA 301 at 5.0 ft

Louvers Product Limited Warranty

Thank you for purchasing Greenheck louvers. Greenheck warrants this equipment to be free from defect in material and workmanship for a period of **1 year** from the date of product shipment. Any units or parts, which prove defective during the warranty period, will be repaired or replaced at our option when returned to our factory, transportation prepaid. Unless agreed upon otherwise Greenheck will not be held responsible for costs associated with removal or installation of product(s).

The legal remedies described in this Limited Warranty are the sole exclusive remedy of Customer. This limited warranty will be void if payment from Customer is not received within a commercially reasonable time frame. GREENHECK MAKES NO OTHER WARRANTY, EITHER EXPRESS OR IMPLIED, REGARDING ITS PRODUCTS, OR ITS SELECTION AND APPLICATION, INCLUDING, BUT NOT LIMITED TO, COMPLIANCE WITH BUILDING CODES, SAFETY CODES, LAWS, MERCHANTABILITY OR FITNESS OR A PARTICULAR PURPOSE. This limited warranty is extended solely to the Customer. It is nontransferable and non-assignable, and the Customer shall not permit or authorize its employees, agents, representatives or customers to claim, represent or imply that this limited warranty extends or is available to anyone other than the Customer.

In the event of material breach by the Customer of any of the conditions of this warranty, Greenheck shall have no liability for and product failure claims.

Failure to pay Greenheck in full for original services will automatically make this warranty null and void.

Greenheck will not be held liable for incidental or consequential damages of any kind. The limited warranty of product(s) replaced or repaired under this limited warranty shall be limited to the remainder of the original warranty period. Greenheck reserves the right to reasonable field access to diagnose and repair any product alleged to be defective. This limited warranty may not be modified by anyone and may not be changed by such things as purchase order forms or acceptance forms, unless otherwise agreed upon by Greenheck.

This limited warranty is provided in lieu of any other warranty requirements or obligations, including, but not limited to, those within project specifications.

All notices and claims given under or pursuant to this agreement shall be in writing and sent by certified or registered mail, postage prepaid, return receipt requested to: Greenheck, Attn: Louver Sales, 525 Western Road, Schofield, WI 54476.

By proceeding to use our products and services on your project, you accept the terms of these limited warranties.