KEYNOTES

1. CONNECT TO EXISTING HOSPITAL POWER LOGIC NETWORK. REVISE GRAPHICAL USER INTERFACE AS REQUIRED TO VIEW DATA FROM NEW POWER MONITOR. THE POWER MONITOR MUST BE FULLY FUNCTIONAL AND DISPLAY DATA SIMILAR TO EXISTING POWER MONITORS.

GENERAL NOTES

1. REFER TO 1-E7 FOR ELECTRICAL NOTES AND SCHEDULES.
2. REFER TO 1-A1 FOR ADDITIONAL INFORMATION.
3. REFER TO 1-E6 FOR PHASING INFORMATION.
4. ACCESS TO BW02 SHAFT WILL REQUIRE A CONTRACTOR REQUEST FORM. FACILITY DESIGN PERSONNEL WILL OPEN THE DOOR(S) TO THE BW02 SHAFT. BW02 HAS ASBESTOS CONTAINING MATERIAL WITHIN AND FALL HAZARDS. CONTRACTOR WILL BE REQUIRED TO HAVE ASBESTOS AWARENESS TRAINING AND TRAINING ON FALL PROTECTION PLUS WEAR FALL PROTECTION WHILE IN THE SHAFT AND TIED OFF. CONTRACTOR SHALL NOT PROP THE DOOR(S) TO THE SHAFT OPEN. IF THE CONTRACTOR IS FOUND TO HAVE PROPPED OPEN DOOR(S) OR FAILED TO WEAR APPROPRIATE FALL PROTECTION, THE CONTRACTOR EMPLOYEE WILL BE REMOVED FROM THE PROJECT UNTIL INVESTIGATION IS CONDUCTED TO DETERMINE CIRCUMSTANCES AND IF REMOVAL WILL BE PERMANENT.

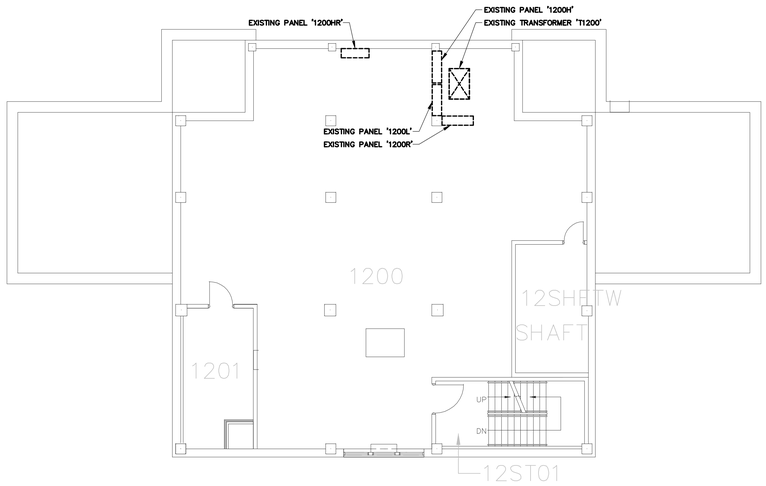

1 TWELFTH FLOOR PLAN - ELECTRICAL DEMOLITION

SCALE: 1/8"=1'-0"

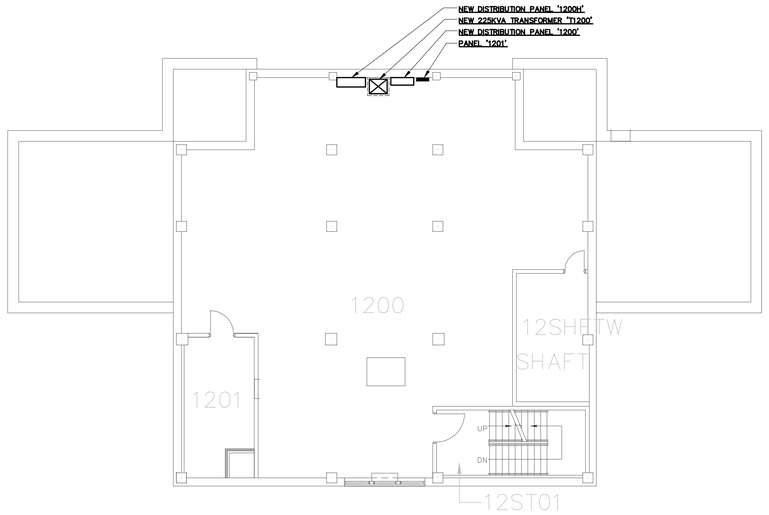

2 TWELFTH FLOOR PLAN - ELECTRICAL

SCALE: 1/8"=1'-0"

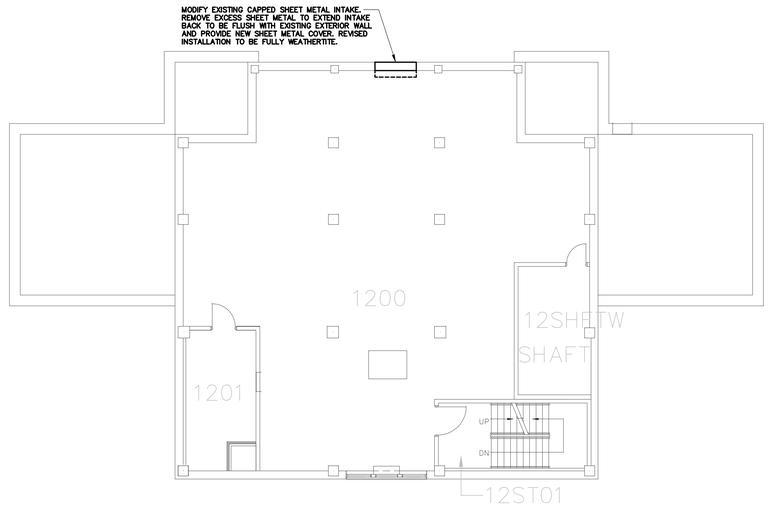

3 TWELFTH FLOOR PLAN - MECHANICAL

SCALE: 1/8"=1'-0"

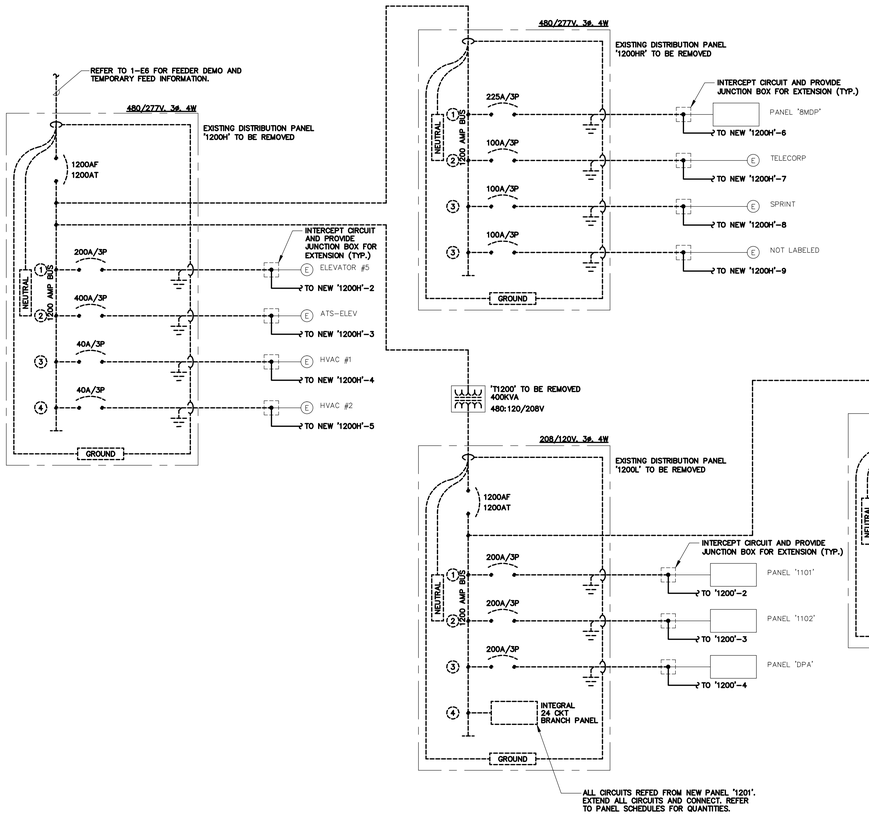

4 ONE-LINE DIAGRAM - TWELFTH FLOOR REVISIONS

NO SCALE

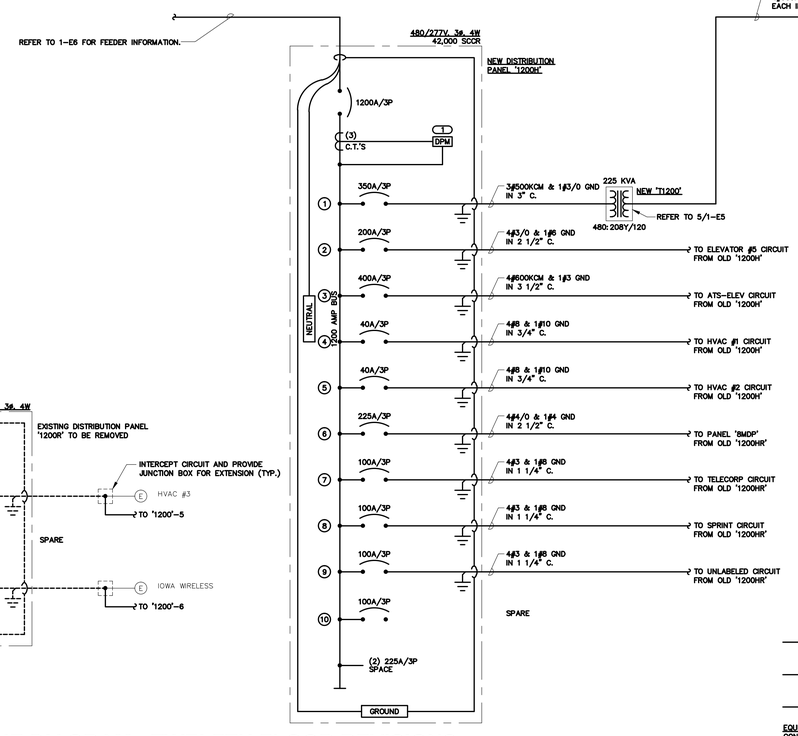

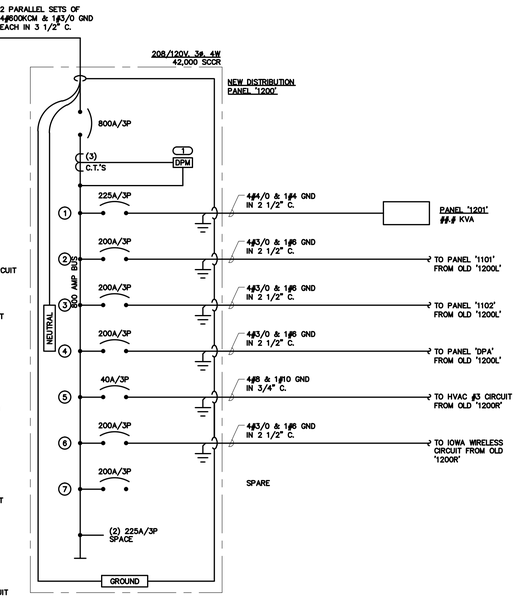

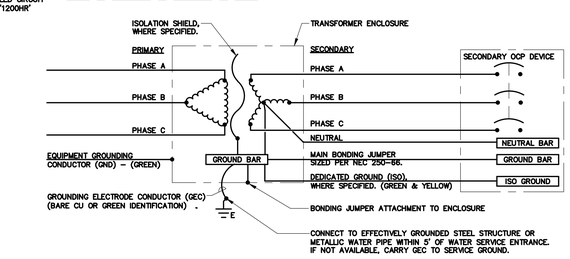

5 TRANSFORMER WIRING DETAIL

NO SCALE

Revisions	Date

Approved Supervisor Facility Manager

Approved Associate Director Patient Care

Approved Associate Director

Approved Chief of Staff

Approved Director

Stamp: LICENSED PROFESSIONAL ENGINEER — MATTHEW D. SNYDER 16945 — IOWA

Key Plan

Achitect/Engineer: CLH Calvin L. Hinz Architects

Calvin L. Hinz Architects, P.C. CLH 2010-18
3705 North 200th Street
Omaha, Nebraska 68022
Phone: 402.291.0911
Fax: 402.291.9193

KJWW ENGINEERING CONSULTANTS
Experience you can build on.™
623 26TH AVENUE
ROCK ISLAND, IL 61201
309.788.0673
FAX: 309.786.5967
www.kjww.com
STRUCTURAL : MECHANICAL : ELECTRICAL
TECHNOLOGY : MEDICAL EQUIPMENT SOLUTIONS

Drawing Title: TWELFTH FLOOR PLAN - ELECTRICAL

Approved Project Director

Project Title: ELECTRICAL PANELS, FEEDERS, SWITCH UPGRADES

Location: IOWA CITY, IOWA

Date	Drawn	Checked	Approved
12-14-12	REEWIN	LEEVAN	MATSNY

Project Number: 636A8-12-009

Building Number: 1

Drawing Number: 1-E5

Dwg. 7 of 11

Office of Facilities Management

Department of Veterans Affairs

VA FORM 08-6231