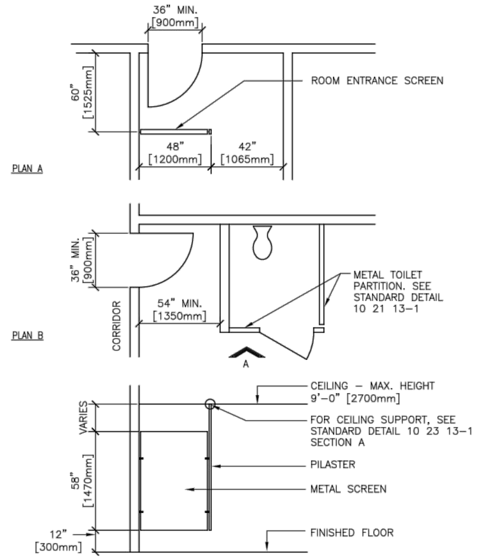

ENTRANCE SCREENS FOR WHEELCHAIR TOILETS

\# NTS

Department of Veterans Affairs

DETAIL TITLE / ENTRANCE SCREENS FOR WHEELCHAIR TOILETS

SCALE :NONE

DATE ISSUED: DECEMBER 2008 CAD DETAIL NO.: SD102113-02.DWG

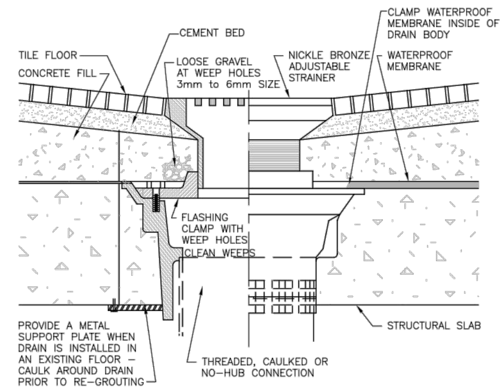

TYPE "C" FLOOR DRAIN DETAIL

\# NTS

Department of Veterans Affairs

DETAIL TITLE / TYPE "C" FLOOR DRAIN DETAIL

SCALE :NONE

DATE ISSUED: DECEMBER 2008 CAD DETAIL NO.: SD221300-03.DWG

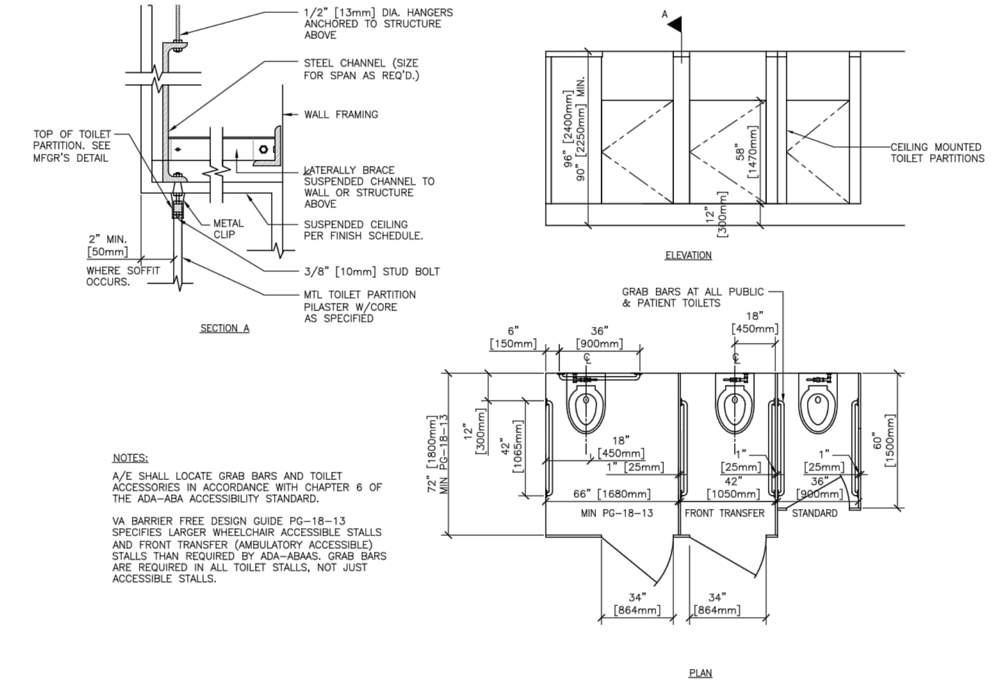

NOTES:

A/E SHALL LOCATE GRAB BARS AND TOILET ACCESSORIES IN ACCORDANCE WITH CHAPTER 6 OF THE ADA-ABA ACCESSIBILITY STANDARD.

VA BARRIER FREE DESIGN GUIDE PG-18-13 SPECIFIES LARGER WHEELCHAIR ACCESSIBLE STALLS AND FRONT TRANSFER (AMBULATORY ACCESSIBLE) STALLS THAN REQUIRED BY ADA-ABAAS. GRAB BARS ARE REQUIRED IN ALL TOILET STALLS, NOT JUST ACCESSIBLE STALLS.

DETAIL TITLE / TOILET STALL DETAILS

SCALE :NONE

DATE ISSUED: DECEMBER 2008

CAD DETAIL NO.: SD102113-01.DWG

Department of Veterans Affairs

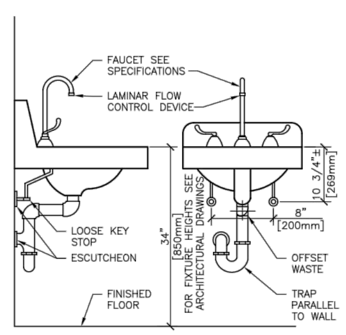

TYPICAL WHEELCHAIR LAVATORY DETAIL

\# NTS

Department of Veterans Affairs

DETAIL TITLE / TYPICAL WHEELCHAIR LAVATORY DETAIL

SCALE :NONE

DATE ISSUED: DECEMBER 2008 CAD DETAIL NO.: SD224000-08.DWG

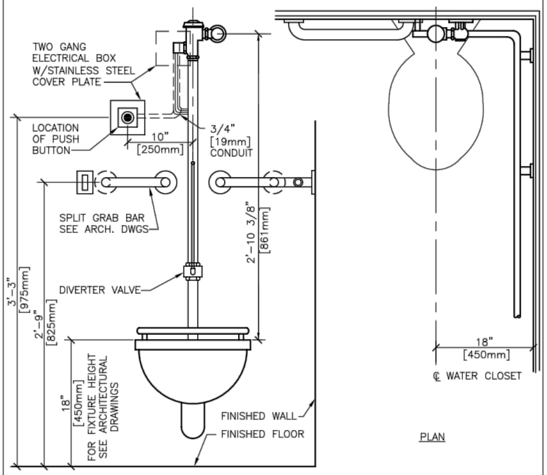

P-104 WATER CLOSET DETAIL

\# NTS

Department of Veterans Affairs

DETAIL TITLE / P-104 WATER CLOSET DETAIL

SCALE :NONE

DATE ISSUED: DECEMBER 2008 CAD DETAIL NO.: SD224000-01.DWG

SLOAN. Efficiency Series

Model
WETS 2053.1001-1.6
Manual Flushometer and Wall Hung Water Closet

DESCRIPTION
Complete system with exposed manual Royal® Flushometer and vitreous china wall hung fixture.
Flush Cycle
Model WETS-2053.1001-1.6 (1.6 gpf/6.0 Lpf)

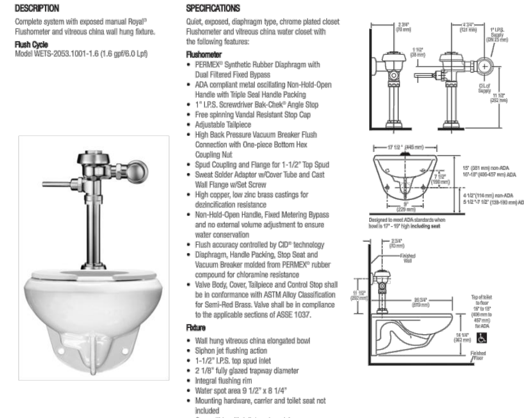

Meets the American Disabilities Guidelines and ANSI A117.1 requirements when installed according to these requirements.

NOTE:
Plumbing System Requirements
- Minimum Flowing Pressure: 25 PSI
- Minimum Flow Rate: 18 GPM

SPECIFICATIONS
Quiet, exposed, diaphragm type, chrome plated closet Flushometer and vitreous china water closet with the following features:

Flushometer
- PERMEX® Synthetic Rubber Diaphragm with Dual Filtered Fixed Bypass
- ADA compliant metal oscillating Non-Hold-Open Handle with Triple Seal Handle Packing
- 1" I.P.S. Screwdriver Bak-Chek® Angle Stop
- Free spinning Vandal Resistant Stop Cap
- Adjustable Tailpiece
- High Back Pressure Vacuum Breaker Flush Connection with One-piece Bottom Hex Coupling Nut
- Spud Coupling and Flange for 1-1/2" Top Spud
- Sweat Solder Adapter w/Cover Tube and Cast Wall Flange w/Set Screw
- High copper, low zinc brass castings for dezincification resistance
- Non-Hold-Open Handle, Fixed Metering Bypass and no external volume adjustment to ensure water conservation
- Flush accuracy controlled by CID® technology
- Diaphragm, Handle Packing, Stop Seat and Vacuum Breaker molded from PERMEX® rubber compound for chloramine resistance
- Valve Body, Cover, Tailpiece and Control Stop shall be in conformance with ASTM Alloy Classification for Semi-Red Brass. Valve shall be in compliance to the applicable sections of ASSE 1037.

Fixture
- Wall hung vitreous china elongated bowl
- Siphon jet flushing action
- 1-1/2" I.P.S. top spud inlet
- 2 1/8" fully glazed trapway diameter
- Integral flushing rim
- Water spot area 9 1/2" x 8 1/4"
- Mounting hardware, carrier and toilet seat not included
- Compatible with toilet seat models: Olsonite 10CT, Bemis 1955CT & Church Commercial 295CT
- Compatible with carrier model: Jay R. Smith 0210Y-M54
- Water closet shall be in compliance to the applicable sections of ASME A112.19.2/CSA B45.1
- Compliant with the Buy American Act when purchased as a combination

EPA GREEN POWER PARTNER
Sloan Valve Company is buying renewable energy certificates to meet 100% of the company's purchased electricity use at its Franklin Park, Illinois facility.

This space for Architect/Engineer approval	
Job Name	Date
Model Specified	Quantity
Variations Specified	
Customer/Wholesaler	
Contractor	
Architect	

The information contained in this document is subject to change without notice.

SLOAN.
Sloan Valve Company
10500 Seymour Avenue
Franklin Park, IL 60131
Phone: 1-800-9-VALVE-9 (982-5839)
or 1-847-671-4300
Fax: 1-800-447-8329 or 1-847-671-4380
www.sloanvalve.com

Copyright © 2010 Sloan Valve Company
Rev. 0b (06/10)

SLOAN. Efficiency Series

Model
WEUS-1006.1001-1.0
Manual Flushometer and Urinal

DESCRIPTION
Complete system with exposed manual Royal® urinal Flushometer and vitreous china urinal.
Flush Cycle
Model WEUS 1006.1001-1.0 (1.0 gpf/3.8 Lpf)

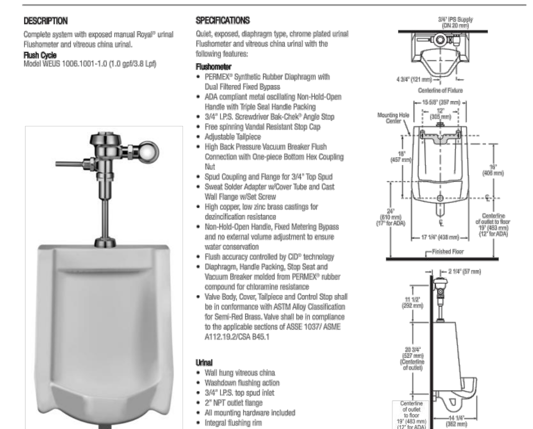

Meets the American Disabilities Guidelines and ANSI A117.1 requirements when installed according to these requirements.

NOTE: Plumbing System Requirements
√ Minimum Flowing Pressure: 25 PSI

SPECIFICATIONS
Quiet, exposed, diaphragm type, chrome plated urinal Flushometer and vitreous china urinal with the following features:

Flushometer
- PERMEX® Synthetic Rubber Diaphragm with Dual Filtered Fixed Bypass
- ADA compliant metal oscillating Non-Hold-Open Handle with Triple Seal Handle Packing
- 3/4" I.P.S. Screwdriver Bak-Chek® Angle Stop
- Free spinning Vandal Resistant Stop Cap
- Adjustable Tailpiece
- High Back Pressure Vacuum Breaker Flush Connection with One-piece Bottom Hex Coupling Nut
- Spud Coupling and Flange for 3/4" Top Spud
- Sweat Solder Adapter w/Cover Tube and Cast Wall Flange w/Set Screw
- High copper, low zinc brass castings for dezincification resistance
- Non-Hold-Open Handle, Fixed Metering Bypass and no external volume adjustment to ensure water conservation
- Flush accuracy controlled by CID® technology
- Diaphragm, Handle Packing, Stop Seat and Vacuum Breaker molded from PERMEX® rubber compound for chloramine resistance
- Valve Body, Cover, Tailpiece and Control Stop shall be in conformance with ASTM Alloy Classification for Semi-Red Brass. Valve shall be in compliance to the applicable sections of ASSE 1037/ ASME A112.19.2/CSA B45.1

Urinal
- Wall hung vitreous china
- Washdown flushing action
- 3/4" I.P.S. top spud inlet
- 2" NPT outlet flange
- All mounting hardware included
- Integral flushing rim
- 100 % factory flush tested
- Compliant to the applicable sections of ASME A112.19.2/CSA B45.1
- Carrier not included
- Compatible with Jay R. Smith Carrier 0636 or 0637
- Compliant with Buy American Act when purchased as a combination

EPA GREEN POWER PARTNER
Sloan Valve Company is buying renewable energy certificates to meet 100% of the company's purchased electricity use at its Franklin Park, Illinois facility.

This space for Architect/Engineer approval	
Job Name	Date
Model Specified	Quantity
Variations Specified	
Customer/Wholesaler	
Contractor	
Architect	

The information contained in this document is subject to change without notice.

SLOAN.
Sloan Valve Company
10500 Seymour Avenue
Franklin Park, IL 60131
Phone: 1-800-9-VALVE-9 (982-5839)
or 1-847-671-4300
Fax: 1-800-447-8329 or 1-847-671-4380
www.sloanvalve.com

Copyright © 2010 Sloan Valve Company
Rev. 0b (07/10)

Revisions	Date

SIOUX FALLS VA HEALTH CARE SYSTEM

Drawing Title	Details
Approved: Division Chief	
Approved: Service Director	
Project Title	Remodel B5 Ground Floor Restroom
Building Number	5
Checked	
Drawn	
Location	VAMROC SIOUX FALLS, SOUTH DAKOTA
Date:	2-13-2013
Project No.	438-13-104
Drawing No.	5 Dwg. of 5

Office of Facilities

Department of Veteran Affairs