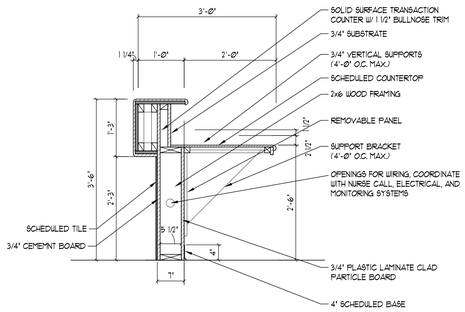

30 HIGH RECEPTION COUNTERTOP
SCALE: 3/4" = 1'-0"

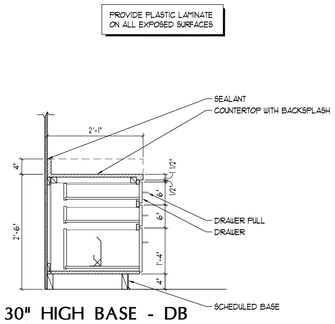

27 30" HIGH BASE - DB THREE DRAWER
SCALE: 3/4" = 1'-0"

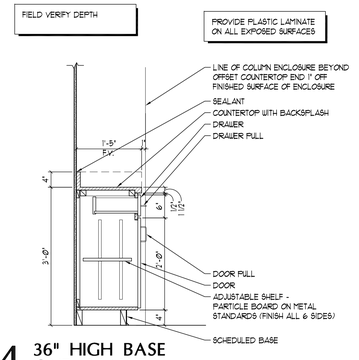

24 36" HIGH BASE ONE DRAWER
SCALE: 3/4" = 1'-0"

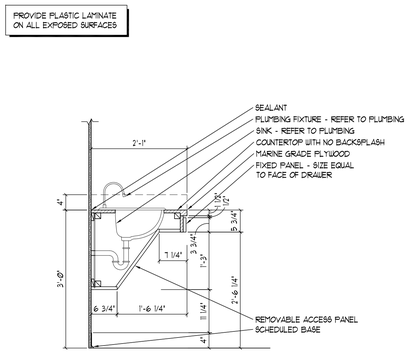

21 36" HIGH SINK BASE
SCALE: 3/4" = 1'-0"

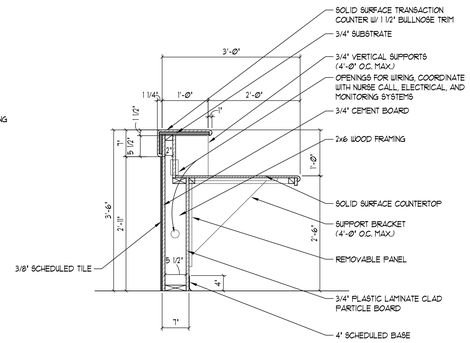

18 ISLAND WORKSTATION
SCALE: 3/4" = 1'-0"

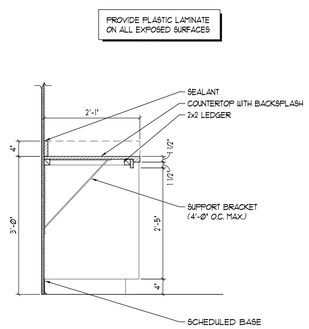

29 36" HIGH WORK SURFACE - KA
SCALE: 3/4" = 1'-0"

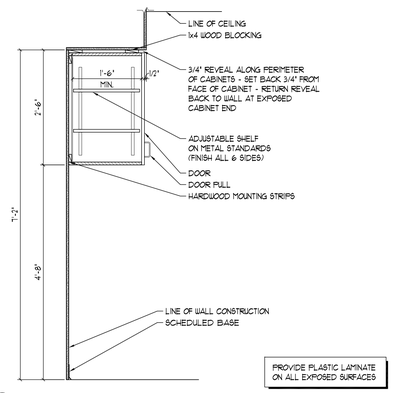

26 30" WALL CABINET - 18" DEEP
SCALE: 3/4" = 1'-0"

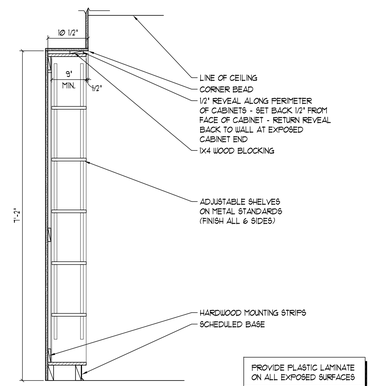

23 9" DEEP SHELVES ADJUSTABLE SHELVES OPEN
SCALE: 3/4" = 1'-0"

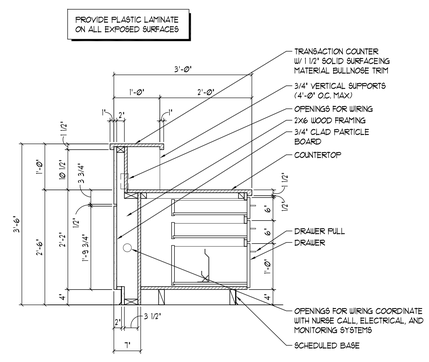

20 NURSE STATION 3 DRAWER BASE
SCALE: 3/4" = 1'-0"

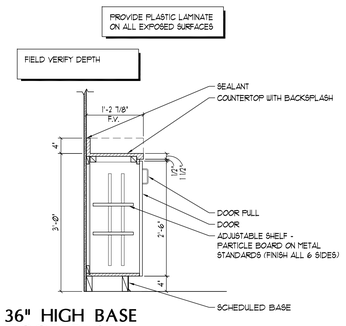

17 36" HIGH BASE DOOR BASE
SCALE: 3/4" = 1'-0"

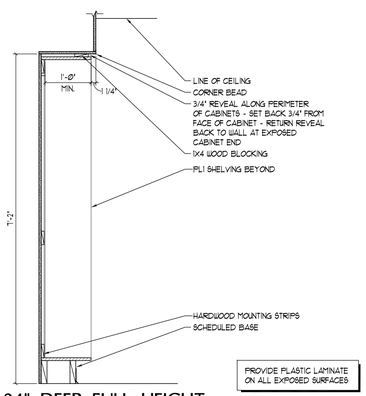

28 24" DEEP FULL HEIGHT VERTICAL SHELVES
SCALE: 3/4" = 1'-0"

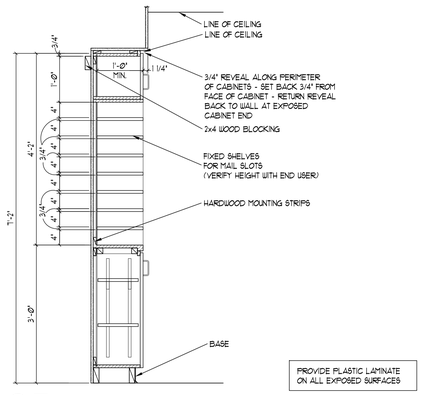

25 MAIL SLOTS
SCALE: 3/4" = 1'-0"

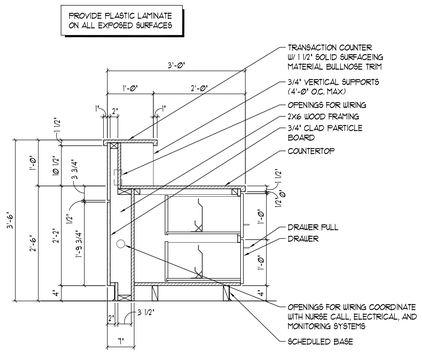

22 NURSE STATION 3 DRAWER BASE
SCALE: 3/4" = 1'-0"

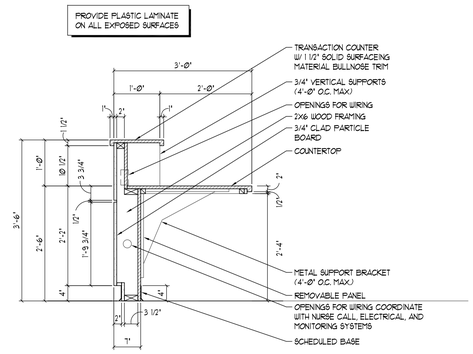

19 NURSE STATION KNEE SPACE
SCALE: 3/4" = 1'-0"

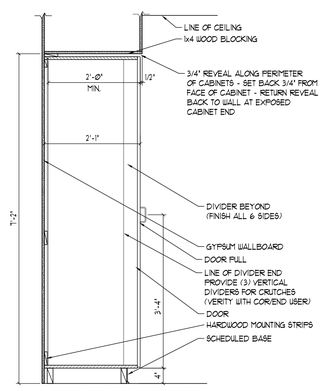

16 24" DEEP FULL HEIGHT W/ DIVIDERS
SCALE: 3/4" = 1'-0"

Scale: AS NOTED

Revisions:	Date

CONSULTANTS:

The Estopinal Group
Architecture Engineering Interiors
820 Jordan Street, Suite 507
Shreveport, LA 71101
tel. 318.424.3700
fax 318.424.3764

R. WAYNE ESTOPINAL
REGISTERED ARCHITECT

PROJECT MANAGERS AND ENGINEERS:

TNF A VETERAN OWNED COMPANY
3 EXECUTIVE COURT, UNIT 4
SOUTH BARRINGTON, IL 60010

Drawing Title: CASEWORK SECTIONS

Approved: Project Director

Project Title: RENOVATE ED & PRIMARY CARE
Phase 1 & 2

Location: SHREVEPORT VAMC
510 EAST STONER AVE

Date: 01/09/13 | Checked: JAH | Drawn: CSH

Project Number: 667-10-100

Building Number: 1N, 1E

Drawing Number: A12.2
Dwg. 36 of 112

Office of Construction and Facilities Management

Department of Veterans Affairs

VA FORM 08-6231

three inches = one foot
one and one half inches = one foot
one inch = one foot
three quarters inch = one foot
one half inch = one foot
three eighths inch = one foot
one quarter inch = one foot
one eighth inch = one foot
J:\ACTIVE SHREVEPORT PROJECTS\VASH\VASH015\CD\ARCH\A-VASH015-A1201-Casework Sections-1N.dwg 1-08-13 03:24:11 PM jatarris