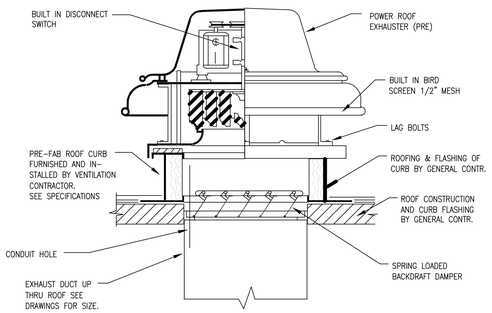

6 ROOF EXHAUST FAN DETAIL
N.T.S.

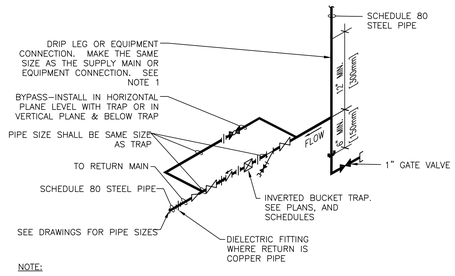

NOTE:

1. ALL DRIP POINTS ON STEAM MAINS SHALL BE PROVIDED WITH A 12" MINIMUM HIGH DRIP LEG FROM BOTTOM OF STEAM MAIN TO TRAP INLET. DRIP LEG SHALL HAVE 6" SCALE POCKET BELOW TRAP INLET.
2. PROVIDE BYPASS PIPING.

4 INVERTED BUCKET STEAM TRAP ASSEMBLY
N.T.S.

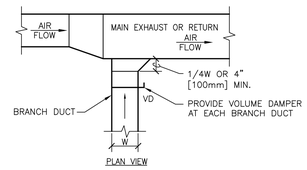

2 EXHAUST OR RETURN BRANCH DUCTWORK
N.T.S.

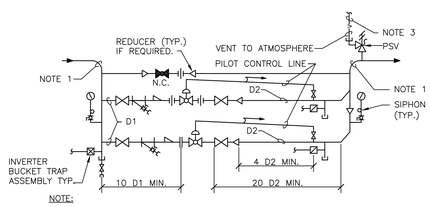

NOTE:

1. SEE FLOOR PLANS FOR PIPE SIZES.
2. SEE EQUIPMENT SCHEDULES FOR VALVE DATA AND PIPE SIZES D1 AND D2. INSTALL VALVES AS RECOMMENDED BY MANUFACTURER.
3. MAKE BYPASS VALVE DISCHARGE PIPE THE SAME SIZE AS D2 FOR THE LARGEST PRV.
4. PROVIDE NECESSARY UNIONS FOR THE REMOVAL OF VALVE WITH SCREWED CONNECTIONS.

5 STEAM PRESSURE REDUCING STATION DOUBLE VALVE (1/3 AND 2/3)
N.T.S.

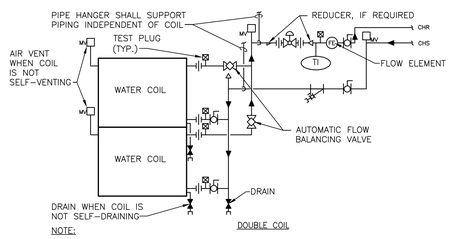

NOTE:

1. WHEN COIL IS INCLUDED IN CASING MOUNTED ON VIBRATION ISOLATORS THE FIRST 2 HANGERS FOR EACH PIPE SHALL BE SPRING & NEOPRENE TYPE. TYPE "H" FOR 4" [100mm]ø PIPE & SMALLER. TYPE "H-P" FOR 5" [125mm]ø PIPE & LARGER.
2. PIPING SHALL BE INSTALLED IN SUCH MANNER THAT IT WILL NOT BLOCK THE SWING OR USE OF ACCESS DOORS OR PANELS; NEITHER SHALL IT BLOCK THE SERVICING OF FILTERS, VALES, OR EQUIPMENT.
3. THE FLOW ELEMENT MAY BE INSTALLED IN THE SUPPLY PIPING IF THE REQUIRED MINIMUM UPSTREAM AND DOWNSTREAM DIMENSIONS CANNOT BE OBTAINED IN THE RETURN PIPING.

3 CHILLED WATER COILS - PIPING CONNECTIONS
N.T.S.

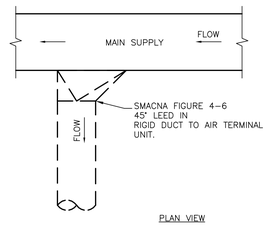

1 ALTERNATE SUPPLY DUCT TAKE-OFF - AIR TERMINAL UNITS
N.T.S.

Revisions:	Date

CONSULTANTS:

The Estopinal Group
820 Jordan Street, Suite 507
Shreveport, LA 71101
tel. 318.424.3700
fax 318.424.3764

STATE OF LOUISIANA
RAMESH T. MIRCHANDANI
License No. 30706
PROFESSIONAL ENGINEER
01/09/13

PROJECT MANAGERS AND ENGINEERS:

TNF A VETERAN OWNED COMPANY
3 EXECUTIVE COURT, UNIT 4
SOUTH BARRINGTON, IL 60010

Drawing Title: MECHANICAL DETAILS

Approved: Project Director

Project Title: RENOVATE ED + PRIMARY CARE

Location: SHREVEPORT VAMC, 510 EAST STONER AVE

Date: 01/09/13 | Checked: RM | Drawn: SL

Project Number: 667-10-100

Building Number: 1N, 1E

Drawing Number: M4.4

Dwg. 71 of 112

Scale: AS NOTED

Office of Construction and Facilities Management

Department of Veterans Affairs

VA FORM 08-6231