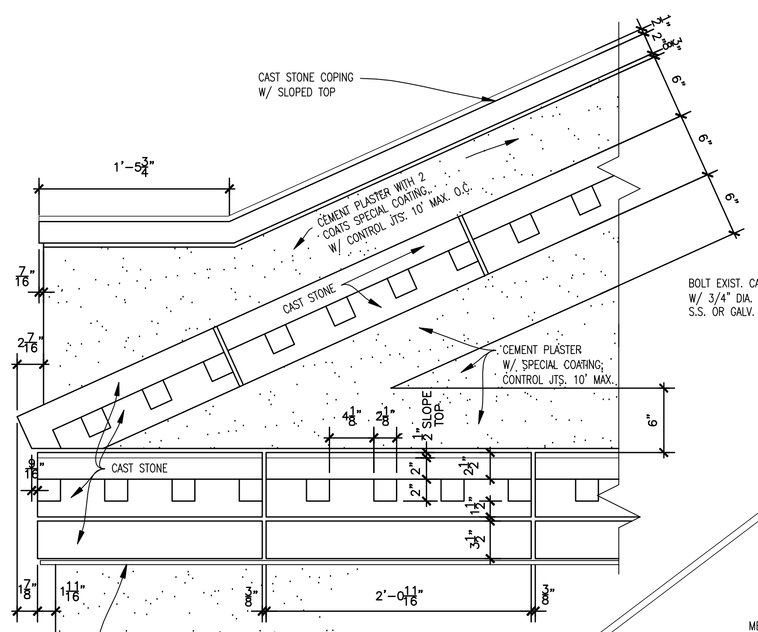

2.1 PARTIAL N.E. ELEV.

SCALE: 1 1/2" = 1'-0"

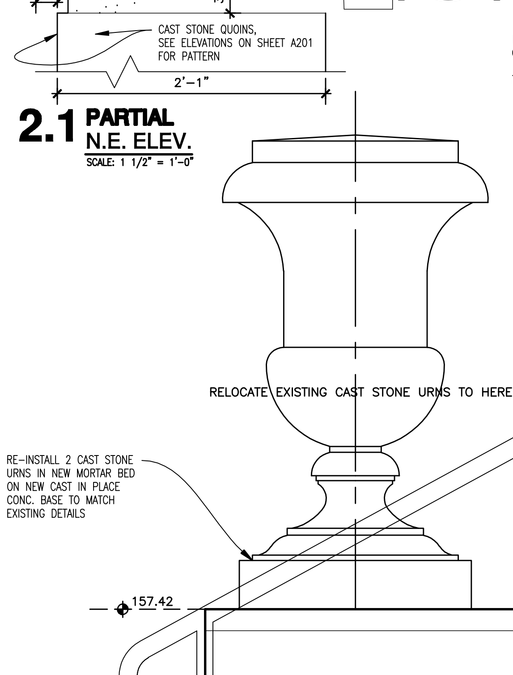

1 DET. AT NEW MASONRY PORTAL WALL / CONC. STEPS

LOOKING S.E. SCALE: 1 1/2" = 1'-0"

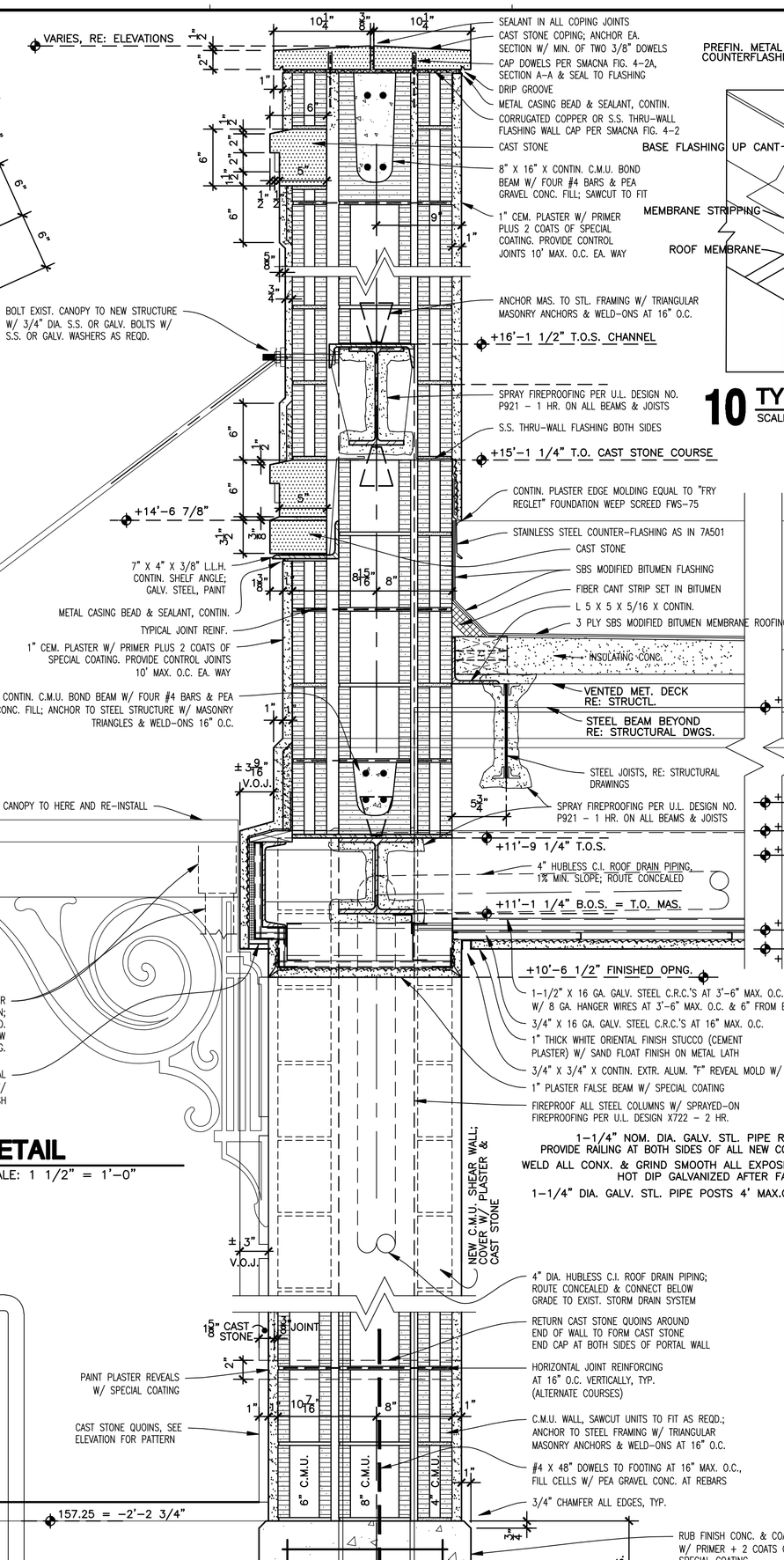

2 DETAIL

SCALE: 1 1/2" = 1'-0"

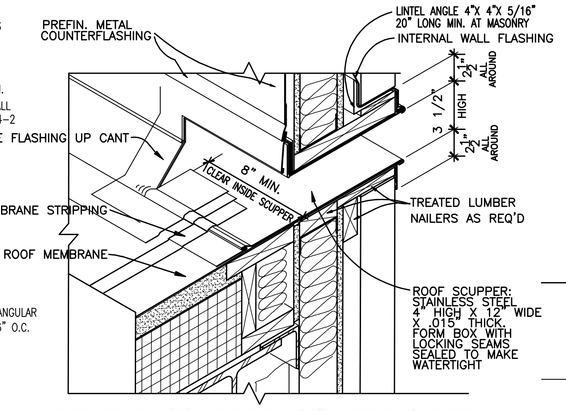

10 TYP. SCUPPER ISOMETRIC DETAIL

SCALE: N.T.S.

RE: WALL SECTIONS FOR ADDITIONAL MATERIAL COMPONENTS AND NOTES

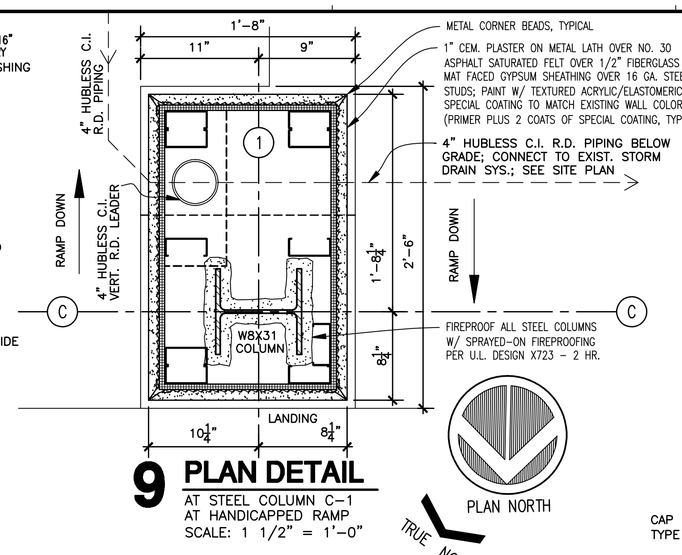

9 PLAN DETAIL

AT STEEL COLUMN C-1 AT HANDICAPPED RAMP

SCALE: 1 1/2" = 1'-0"

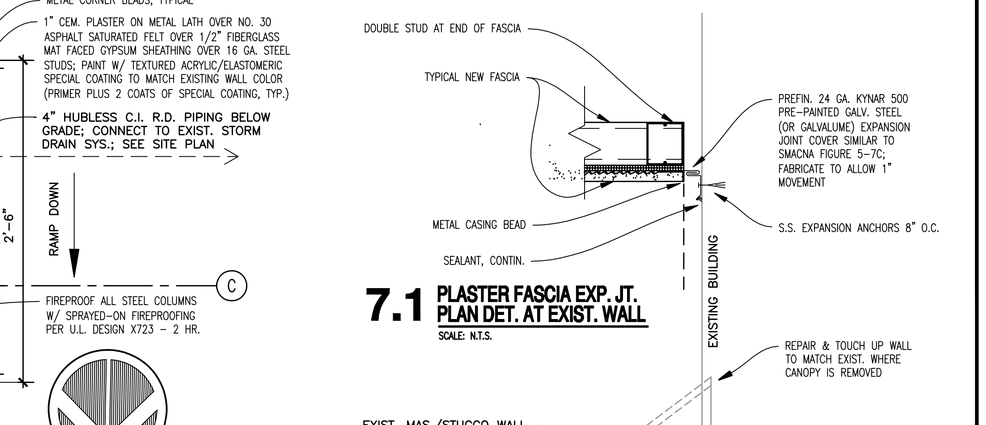

7.1 PLASTER FASCIA EXP. JT. PLAN DET. AT EXIST. WALL

SCALE: N.T.S.

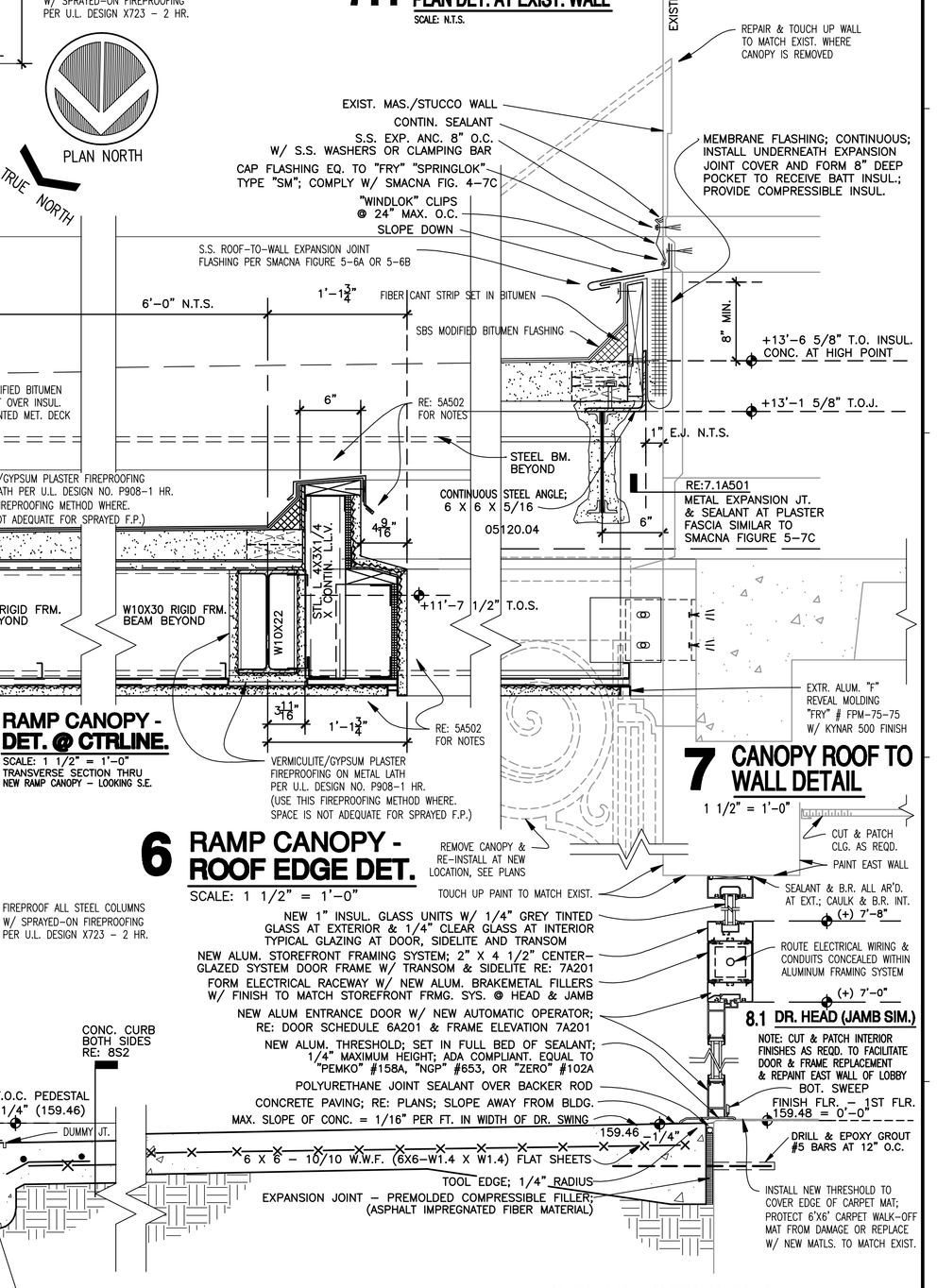

7 CANOPY ROOF TO WALL DETAIL

1 1/2" = 1'-0"

4 RAMP CANOPY - ROOF EDGE DET.

SCALE: 1 1/2" = 1'-0"

5 RAMP CANOPY - DET. @ CTRLINE.

SCALE: 1 1/2" = 1'-0"

TRANSVERSE SECTION THRU NEW RAMP CANOPY - LOOKING S.E.

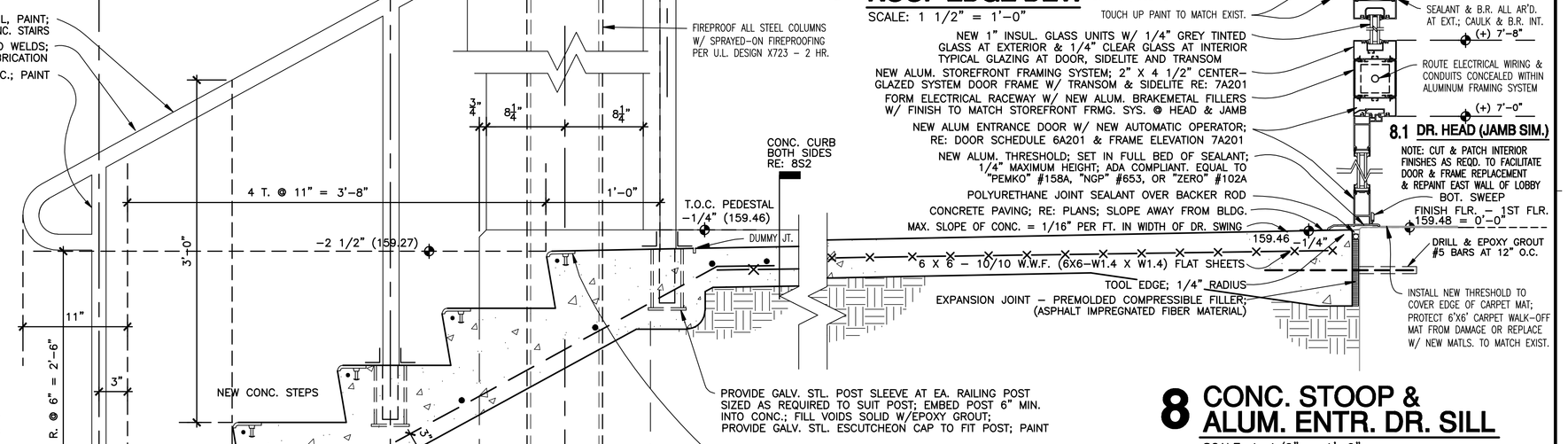

3 DET. @ NEW CONC. STOOP/CONC. STEPS

LOOKING S.E. SCALE: 1 1/2" = 1'-0"

6 RAMP CANOPY - ROOF EDGE DET.

SCALE: 1 1/2" = 1'-0"

8.1 DR. HEAD (JAMB SIM.)

NOTE: CUT & PATCH INTERIOR FINISHES AS REQD. TO FACILITATE DOOR & FRAME REPLACEMENT & REPAINT EAST WALL OF LOBBY

8 CONC. STOOP & ALUM. ENTR. DR. SILL

SCALE: 1-1/2" = 1'-0"

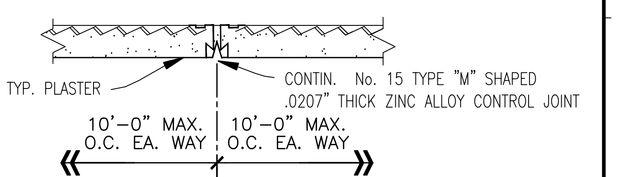

100 S.F. MAX. PANEL SIZE & LENGTH TO WIDTH RATIO SHALL NOT EXCEED 2½ TO 1

11 TYPICAL PLASTER CONTROL JOINT

TYPICAL IN ALL PLASTER WORK, INCLUDING SOFFITS SCALE: N.T.S.

NOTE: AT INSIDE CORNERS: USE No. 30 TYPE CONTROL JOINT; AT EXPANSION JOINTS: USE TWO-PIECE No. 40 TYPE FILLED W/ SEALANT

0 4" 8" 1'-4"

SCALE: 1 1/2" = 1'-0"

Revisions:	Date

CONSULTANTS:

Professional Seal: WALTER B. RANDOLPH No. 1707 STATE OF LOUISIANA REGISTERED ARCHITECT

ARCHITECT/ENGINEERS: 11038-BXP

BH&B

Barron Heinberg & Brocato
Architecture, Engineering
Planning, Interior Design

1015 Wisteria Street
Alexandria, Louisiana 71301
Tel: 318-443-7291 Fax: 318-487-0678

Drawing Title: WALL SECTIONS & DETS.

Approved: Project Director

Project Title: ADA COMPLIANT ACCESS FOR BUILDING 2

Location: VAMC; ALEXANDRIA, LA.

Date: AUGUST 2012 | Checked | Drawn: JRA

Project Number: 502-11-223

Building Number: 2

Drawing Number: A501

Dwg. 7 of 12

Office of Facilities Management

Department of Veterans Affairs

P:\JOBS3\BXP\ARCH\DRAWINGS\007-BXP_A501.dwg, 8/9/2012 4:54:06 PM, jra, 1:1, Barron Heinberg and Brocato Copyright 2011, JRA

VA FORM 08-6231, OCT 1978
Sheet Title Block Version (8-4-2010)