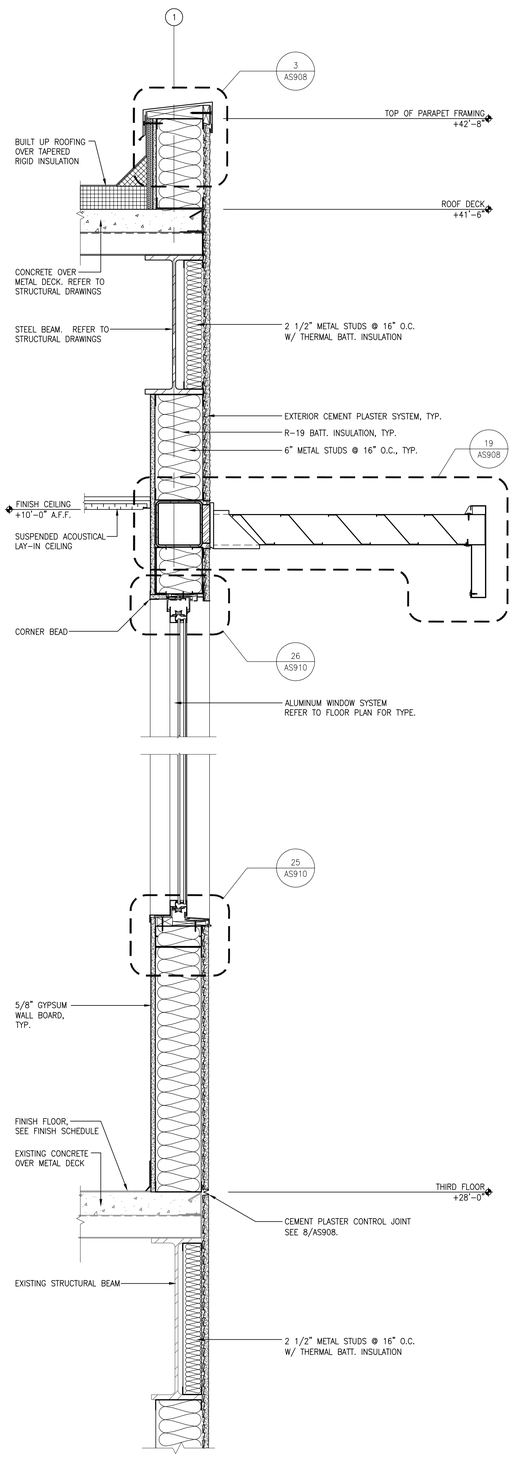

6 WALL SECTION
1 1/2" = 1'-0"

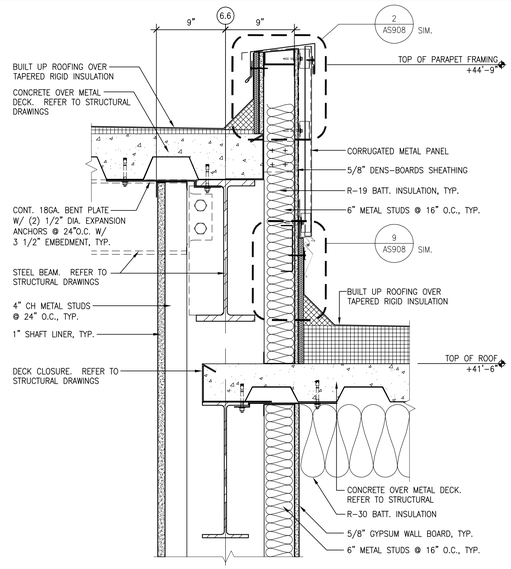

5 WALL SECTION
1 1/2" = 1'-0"

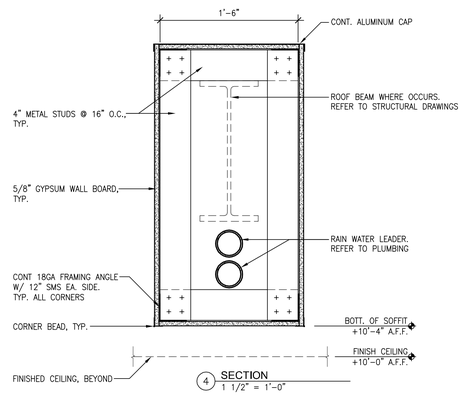

4 SECTION
1 1/2" = 1'-0"

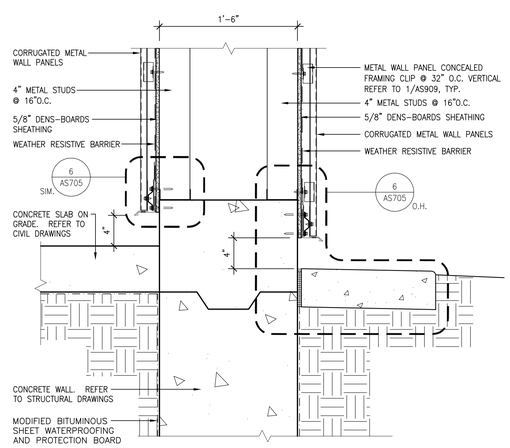

3 WALL SECTION
1 1/2" = 1'-0"

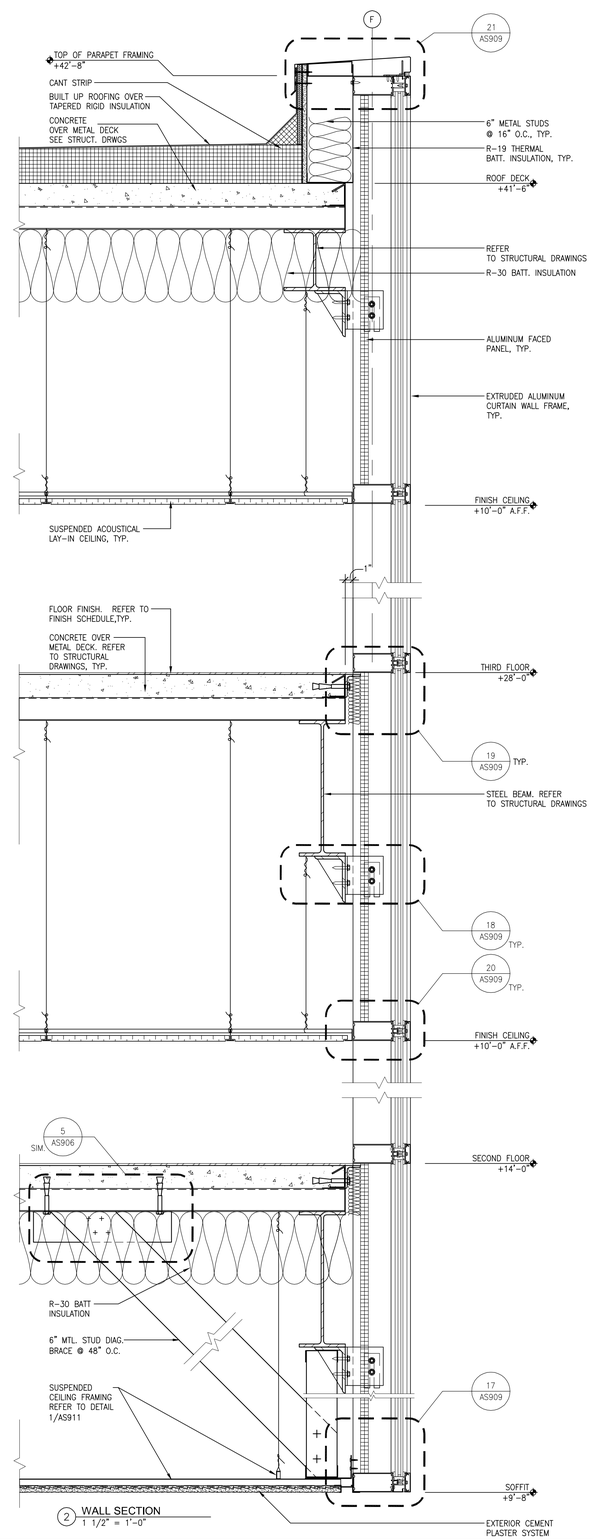

2 WALL SECTION
1 1/2" = 1'-0"

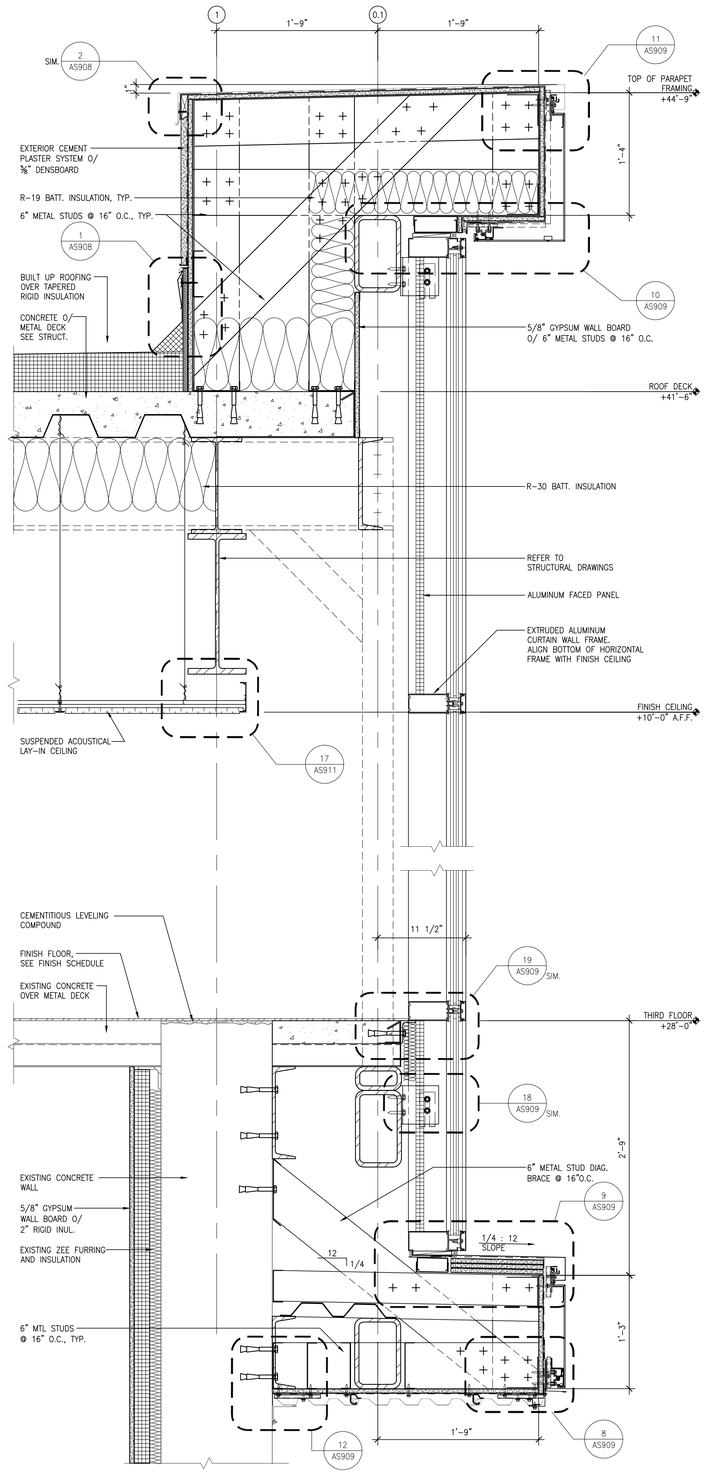

1 WALL SECTION
1 1/2" = 1'-0"

Revisions:	Date

CONSULTANTS:

LICENSED ARCHITECT GRANT MA NO. C-24897 REN. 07-31-13 STATE OF CALIFORNIA

ARCHITECT/ENGINEERS:

HMC Architects
1827 E. Fir Avenue, Studio 103 / Fresno, CA 93720
T 559 322 2444 / www.hmcarchitects.com

Drawing Title: WALL SECTIONS

Approved: Project Director

Project Title: BUILDING 24 SEISMIC CORRECTION AND ADDITION

Location: VAMC FRESNO, CA

Date: March 12, 2013 | Checked: BB | Drawn: CLO

Project Number: 570-215

Building Number: 24

Drawing Number: AS604

Dwg. 68 of 180

Office of Construction and Facilities Management

Department of Veterans Affairs

VA FORM 08-6231