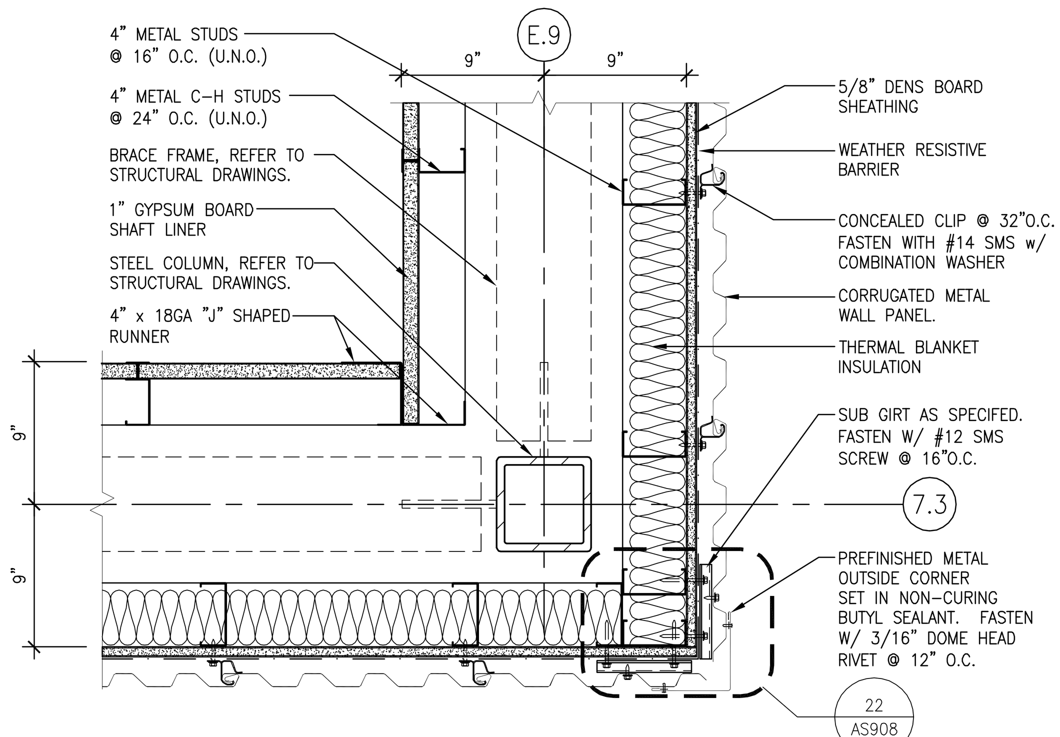

20 COLUMN AT ELEVATOR SHAFT
1 1/2" = 1'-0"

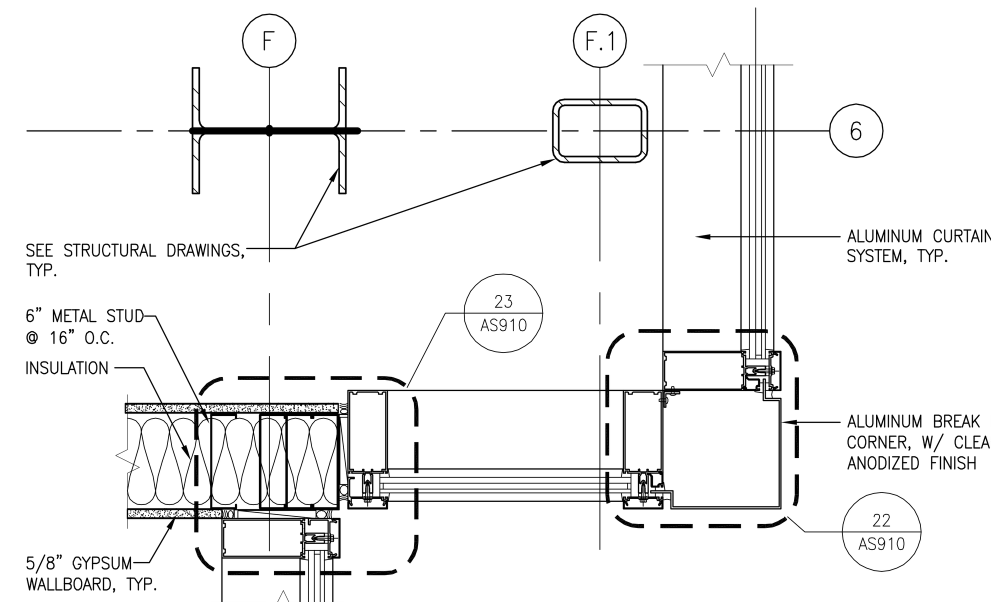

16 COLUMN AT ALUMINUM STOREFRONT
1 1/2" = 1'-0"

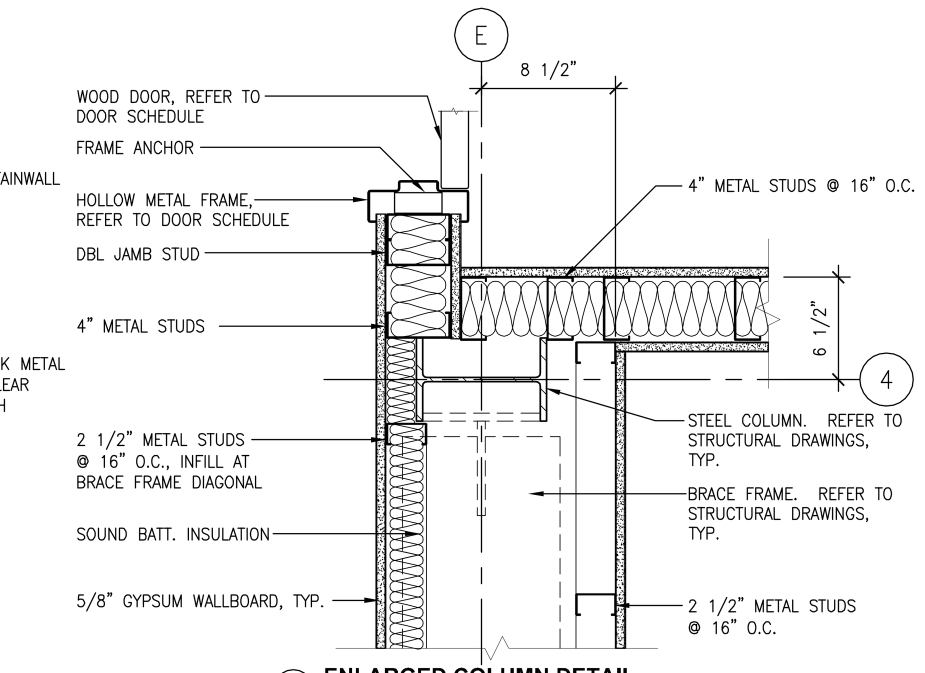

12 ENLARGED COLUMN DETAIL
1 1/2" = 1'-0"

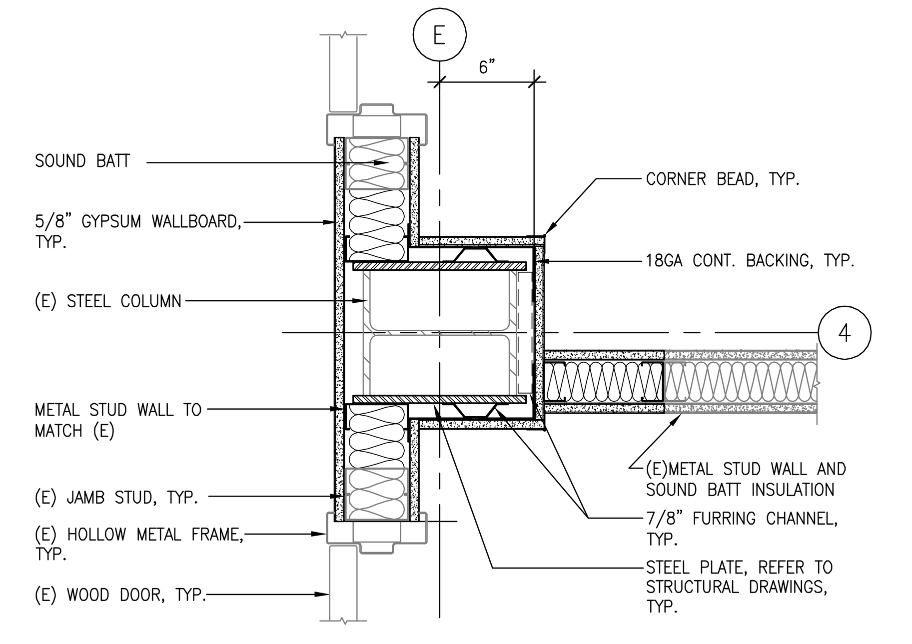

8 ENLARGED COLUMN DETAIL
1 1/2" = 1'-0"

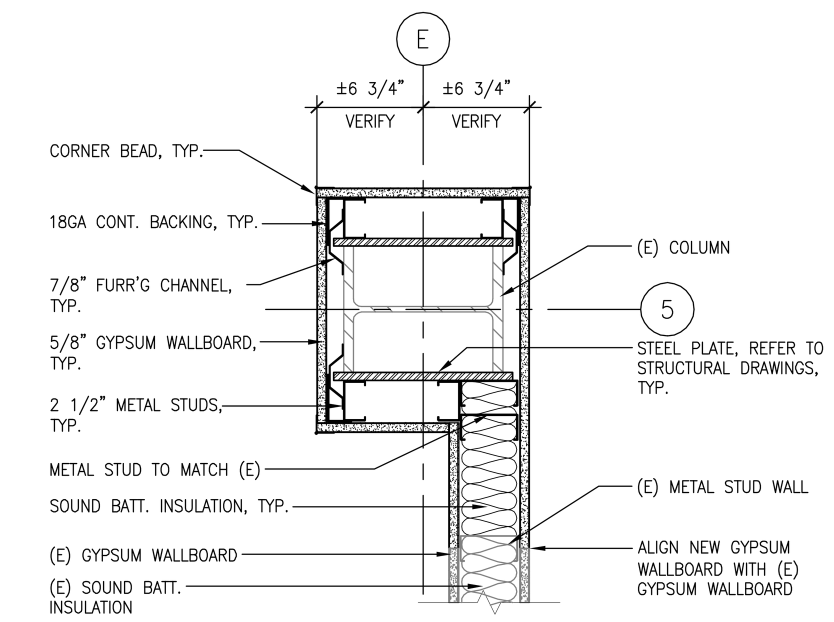

4 ENLARGED COLUMN DETAIL
1 1/2" = 1'-0"

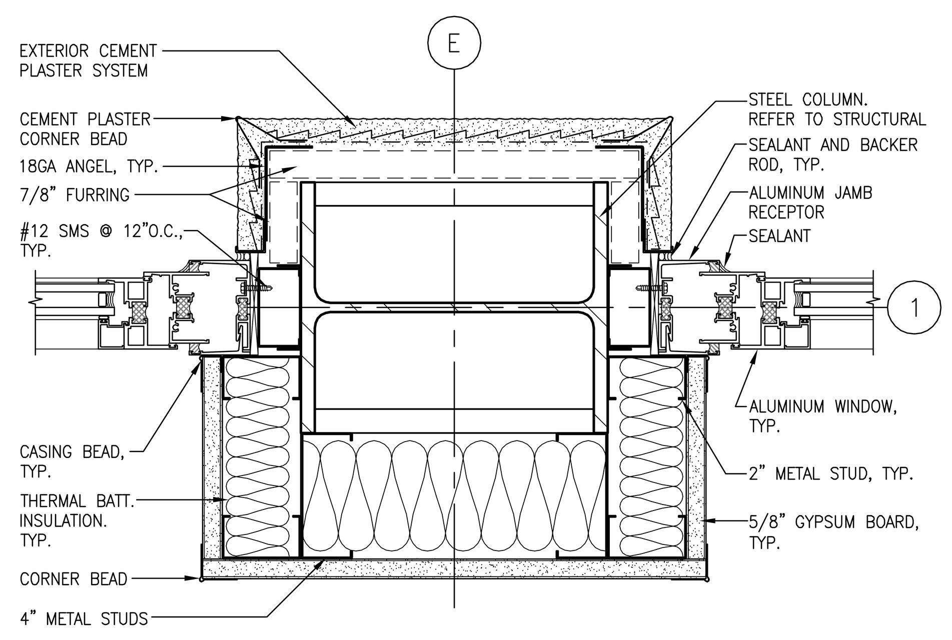

19 COLUMN AT ALUMINUM WINDOWS
3" = 1'-0"

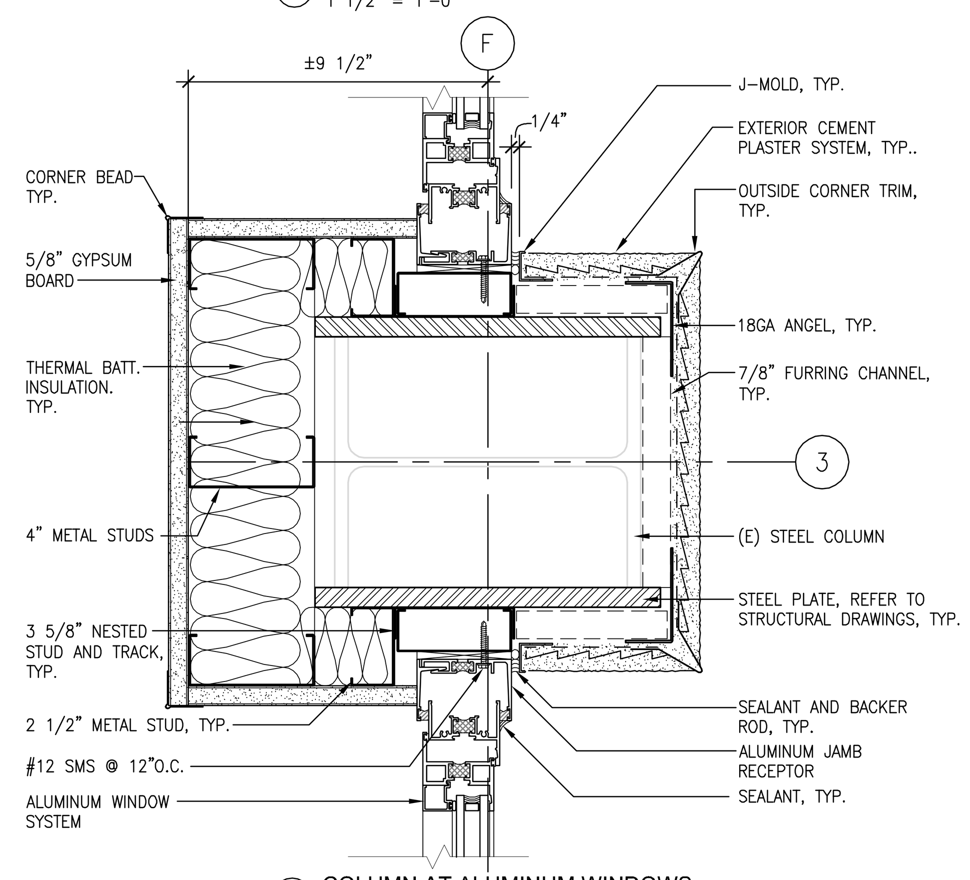

15 COLUMN AT ALUMINUM WINDOWS
3" = 1'-0"

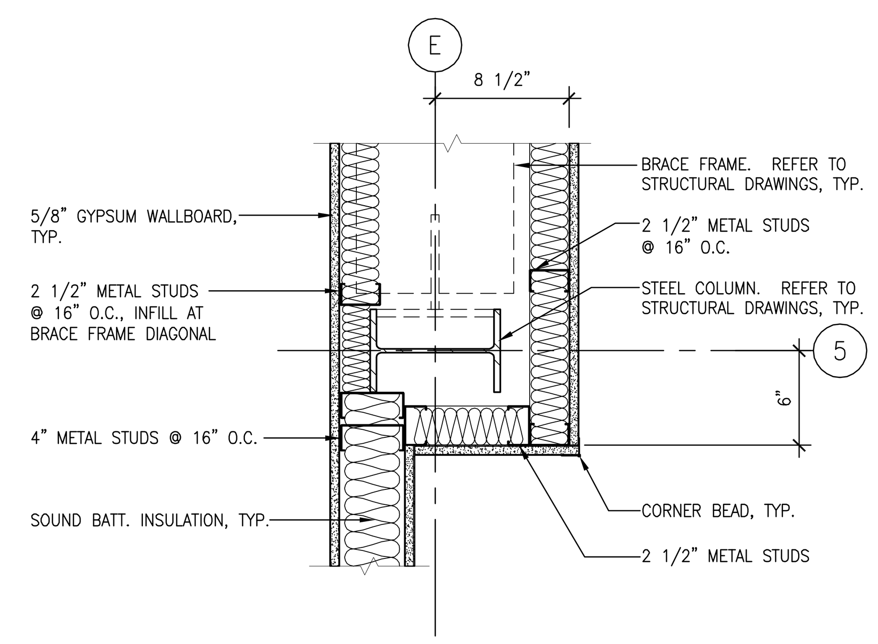

11 ENLARGED COLUMN DETAIL
1 1/2" = 1'-0"

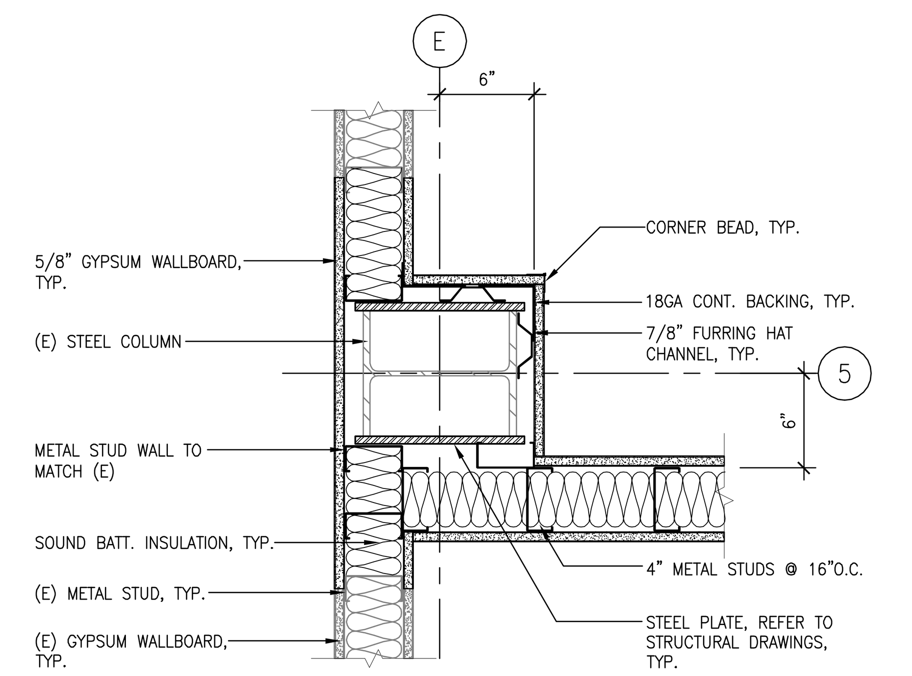

7 ENLARGED COLUMN DETAIL
1 1/2" = 1'-0"

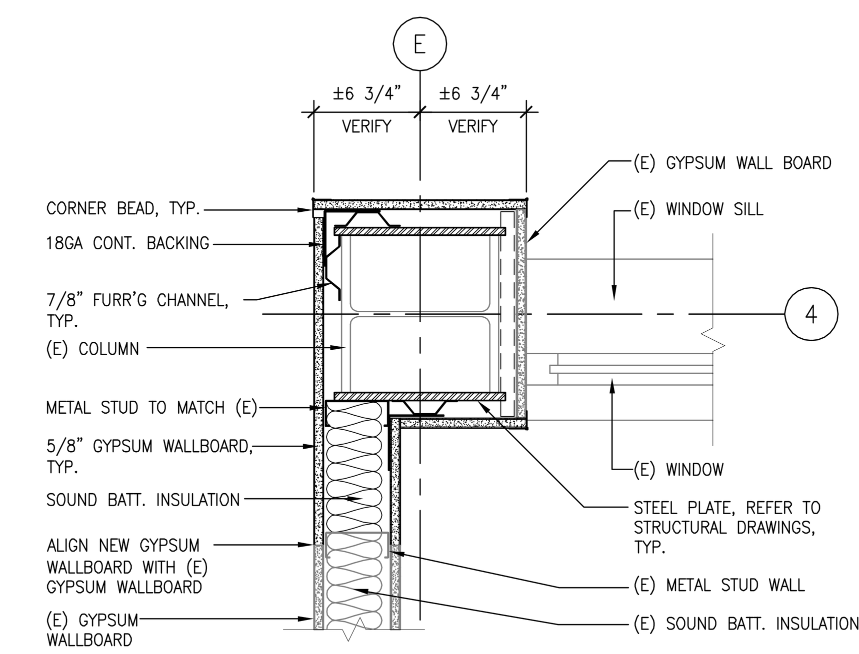

3 ENLARGED COLUMN DETAIL
1 1/2" = 1'-0"

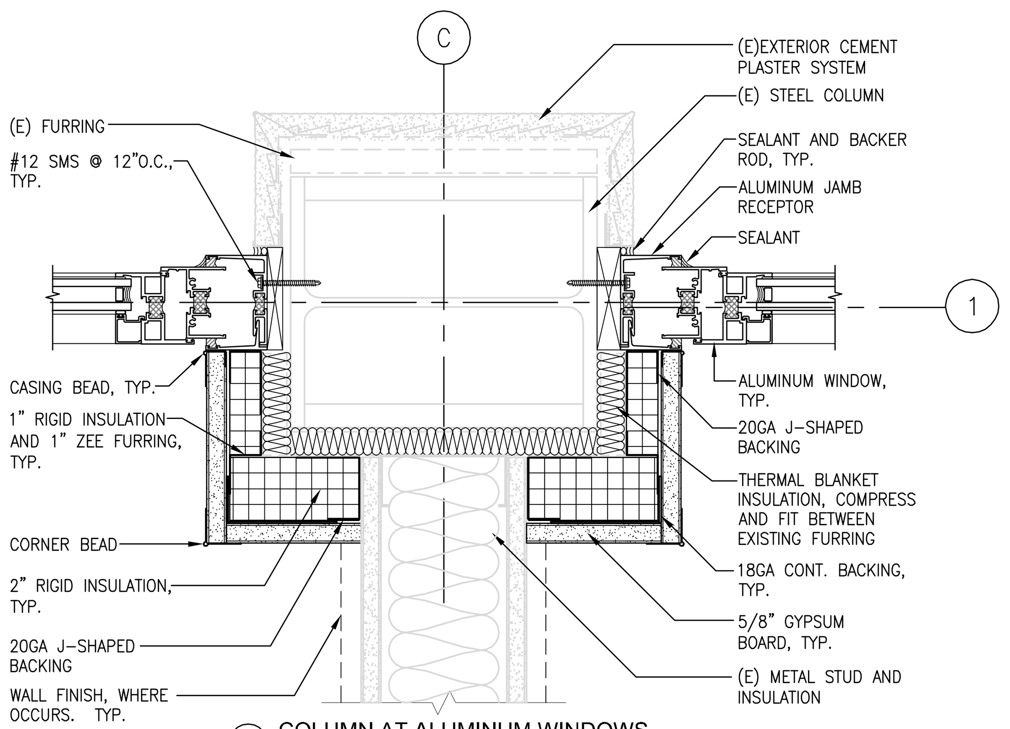

18 COLUMN AT ALUMINUM WINDOWS
3" = 1'-0"

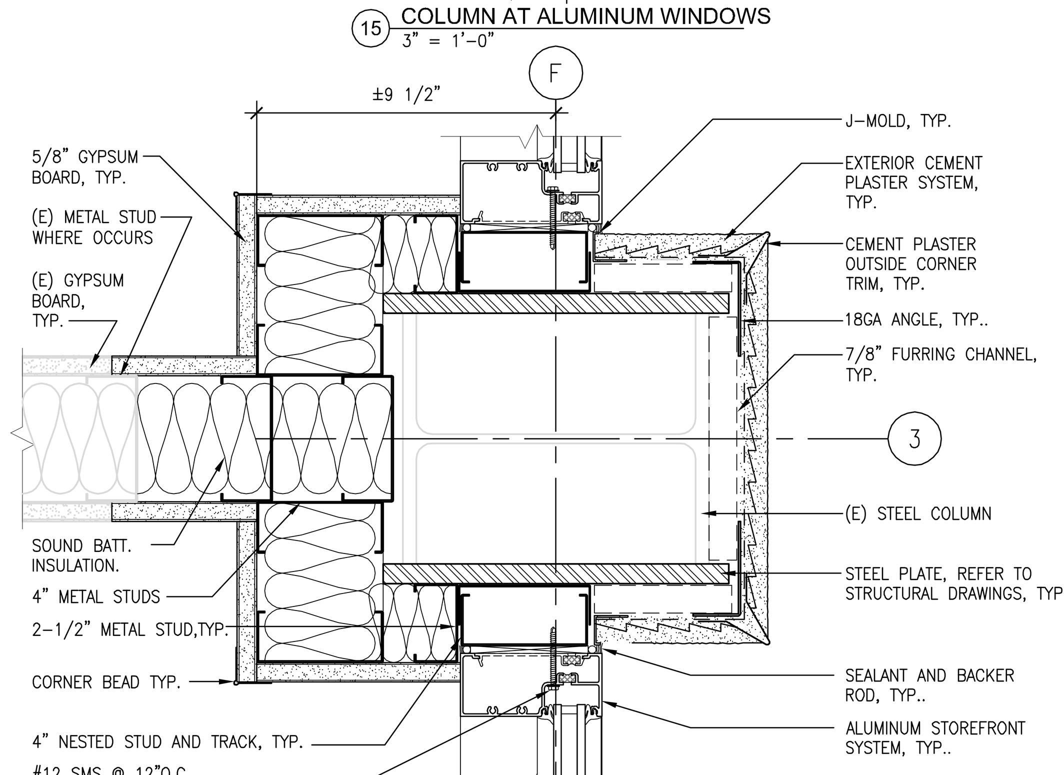

14 COLUMN AT ALUMINUM WINDOWS
3" = 1'-0"

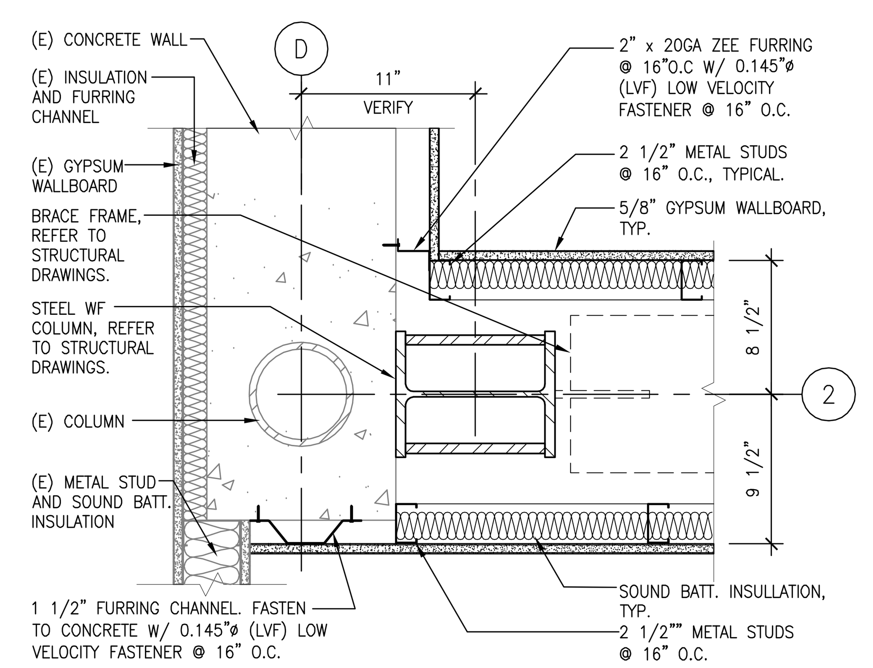

10 ENLARGED COLUMN DETAIL
1 1/2" = 1'-0"

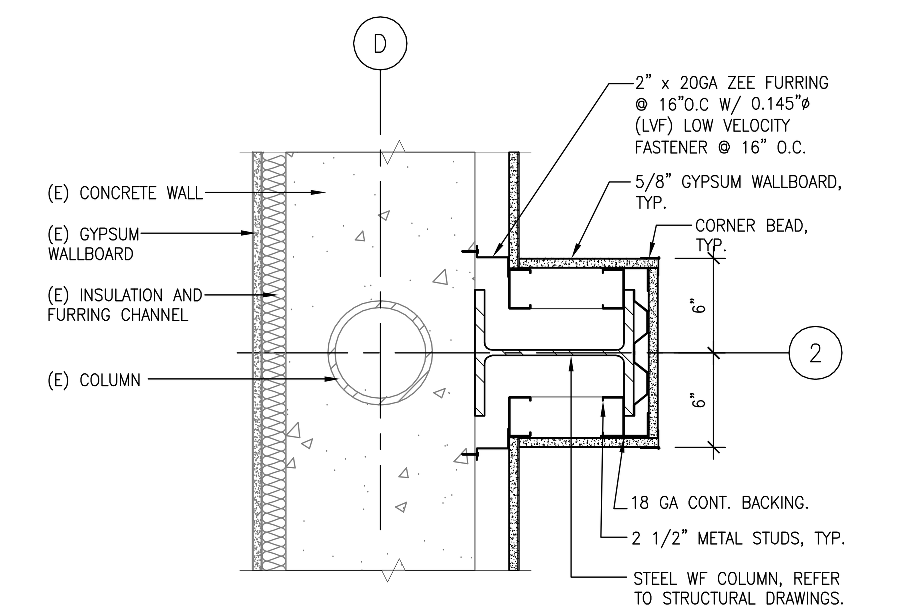

6 ENLARGED COLUMN DETAIL
1 1/2" = 1'-0"

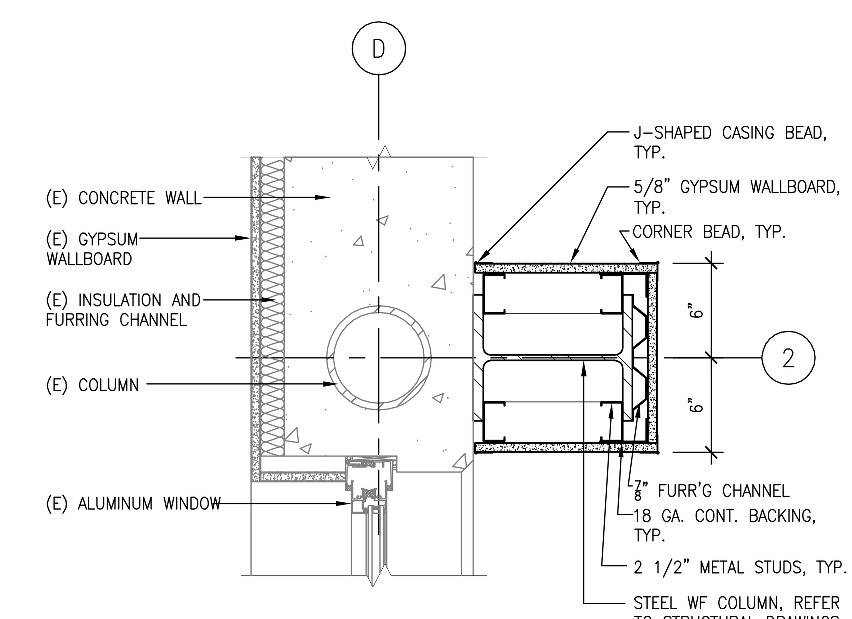

2 ENLARGED COLUMN DETAIL
1 1/2" = 1'-0"

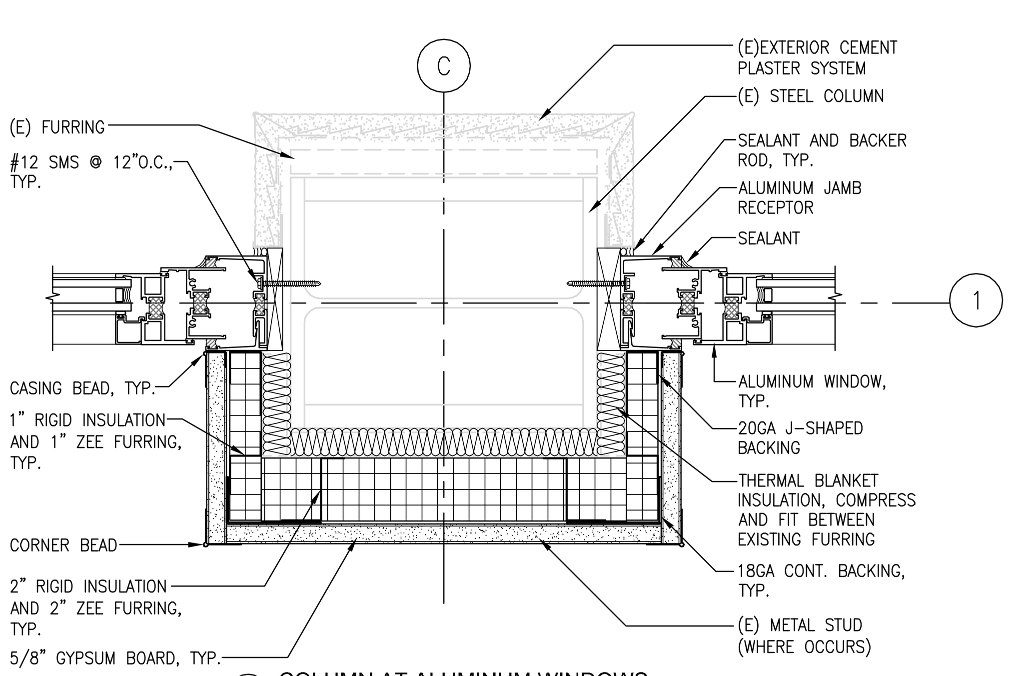

17 COLUMN AT ALUMINUM WINDOWS
3" = 1'-0"

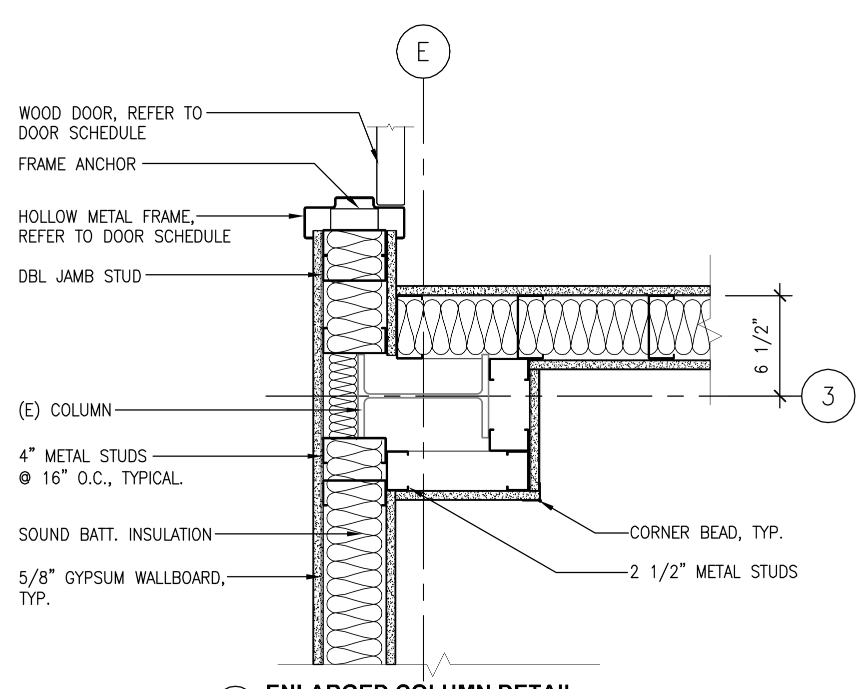

13 ENLARGED COLUMN DETAIL
1 1/2" = 1'-0"

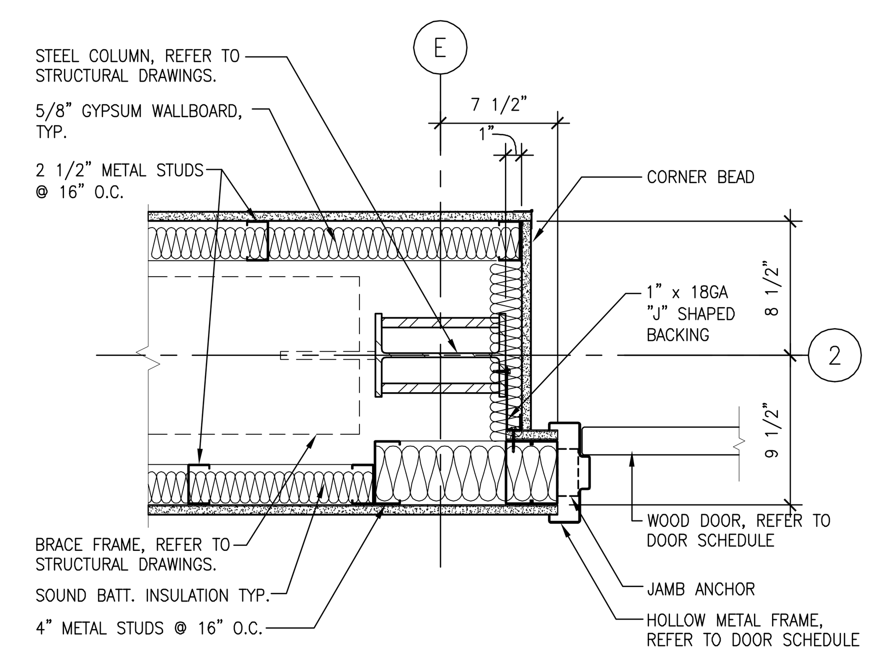

9 ENLARGED COLUMN DETAIL
1 1/2" = 1'-0"

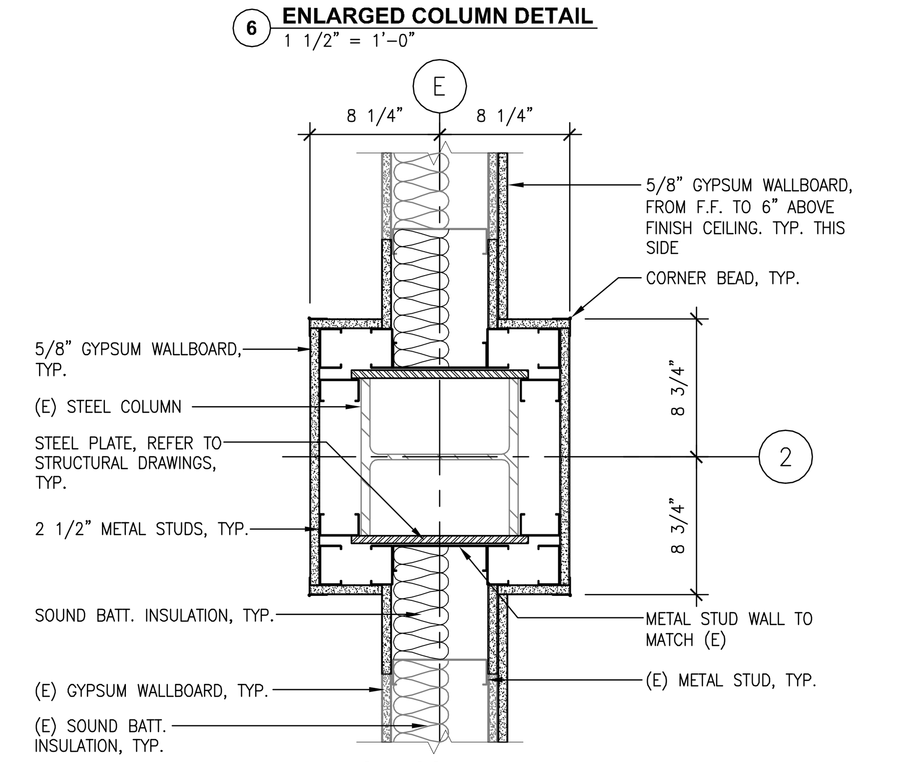

5 ENLARGED COLUMN DETAIL
1 1/2" = 1'-0"

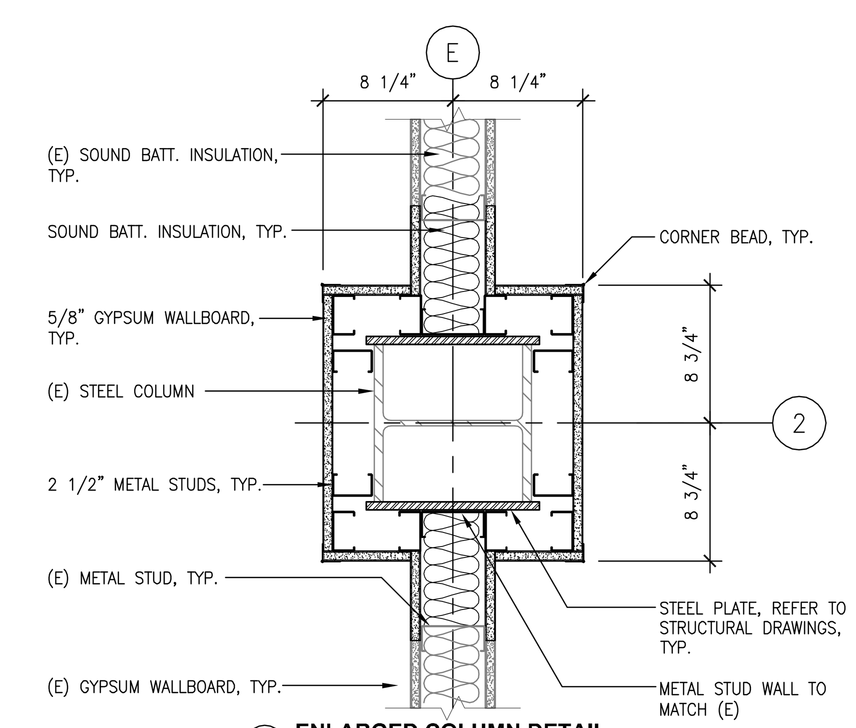

1 ENLARGED COLUMN DETAIL
1 1/2" = 1'-0"

Revisions:	Date

CONSULTANTS:

LICENSED ARCHITECT SCOTT M. GRIFFITH NO. C-24897 REN. 07-31-13 STATE OF CALIFORNIA

ARCHITECT/ENGINEERS:

HMC Architects
1827 E. Fir Avenue, Studio 103 / Fresno, CA 93720
T 559 322 2444 / www.hmcarchitects.com

Drawing Title: ENLARGED COLUMN DETAILS

Approved: Project Director

Project Title: BUILDING 24 SEISMIC CORRECTION AND ADDITION

Location: VAMC FRESNO, CA

Date	Checked	Drawn
March 12, 2013	BB	CLO

Project Number: 570-215

Building Number: 24

Drawing Number: AS704

Dwg. 73 of 180

Office of Construction and Facilities Management

Department of Veterans Affairs

VA FORM 08-6231