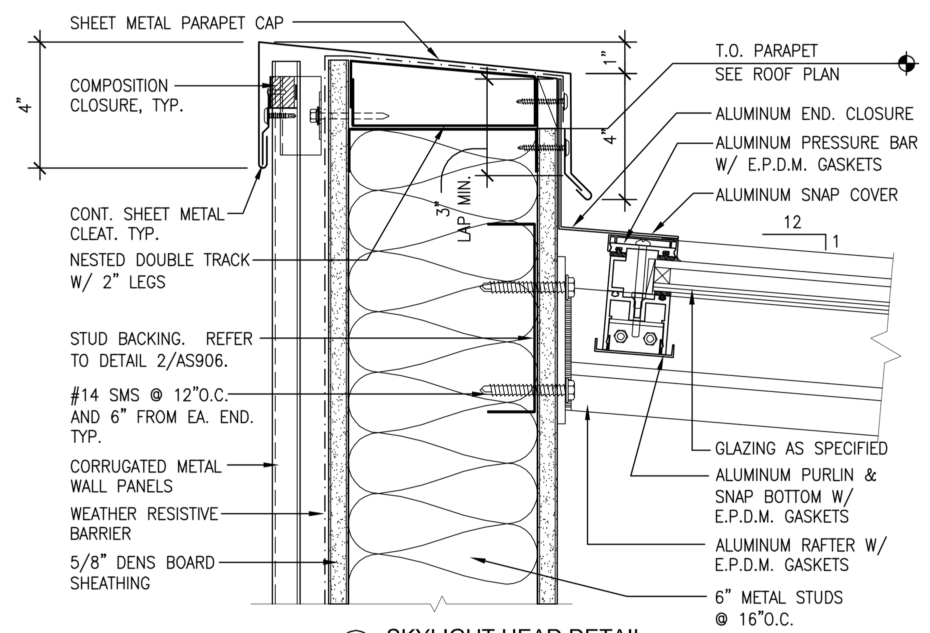

15 SKYLIGHT HEAD DETAIL
3" = 1'-0"

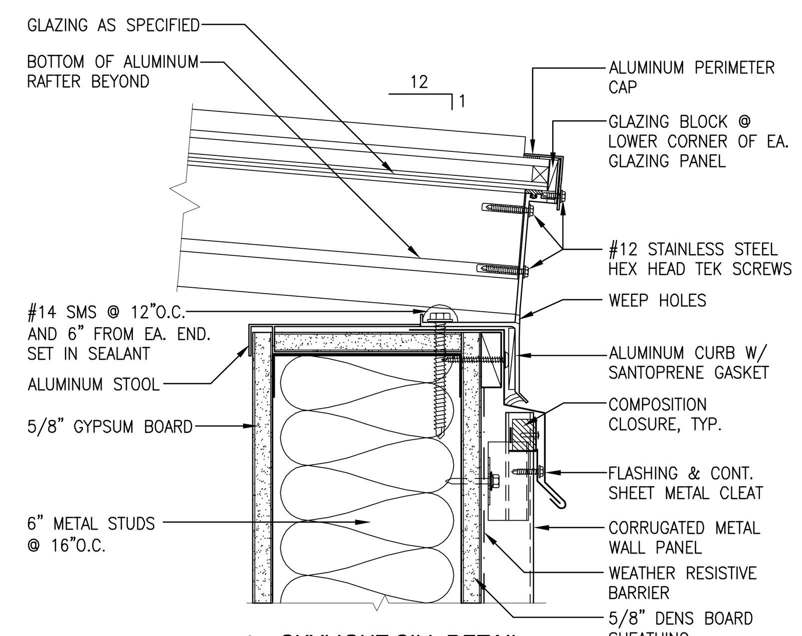

14 SKYLIGHT SILL DETAIL
3" = 1'-0"

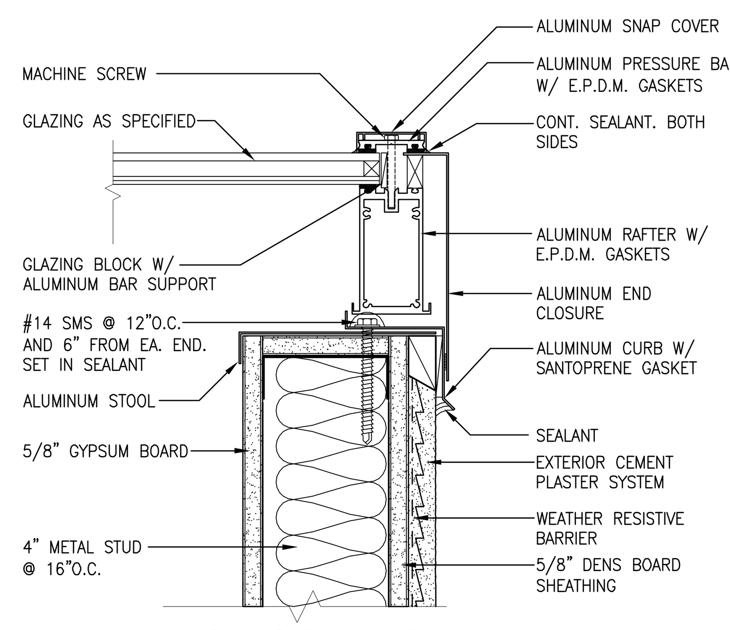

13 SKYLIGHT END DETAIL
3" = 1'-0"

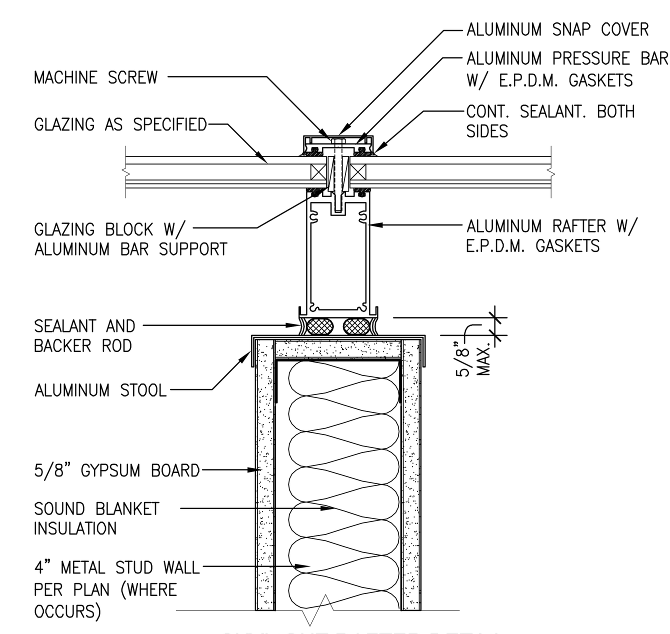

12 SKYLIGHT RAFTER DETAIL
3" = 1'-0"

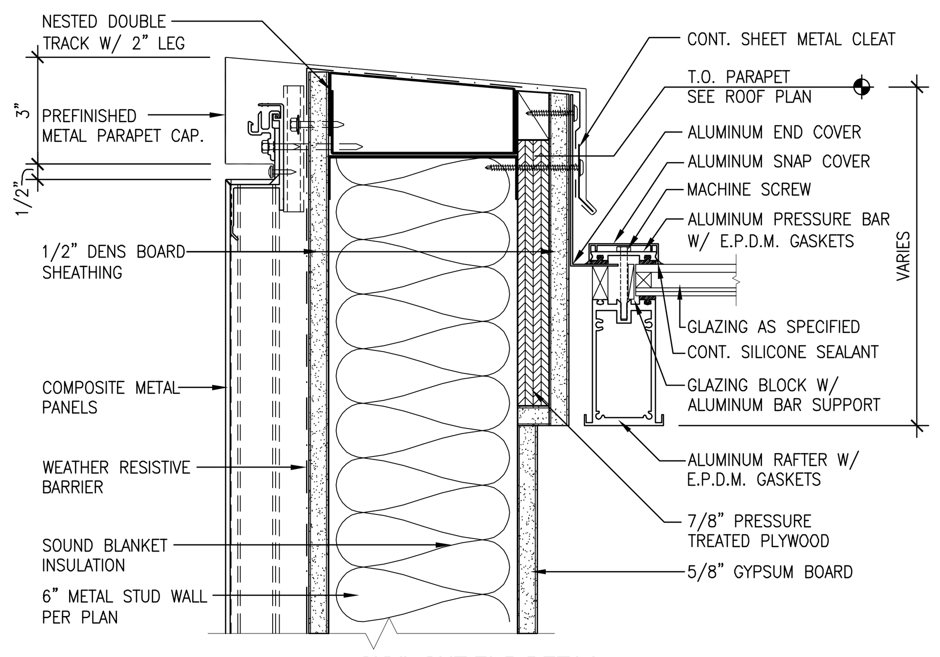

11 SKYLIGHT END DETAIL
3" = 1'-0"

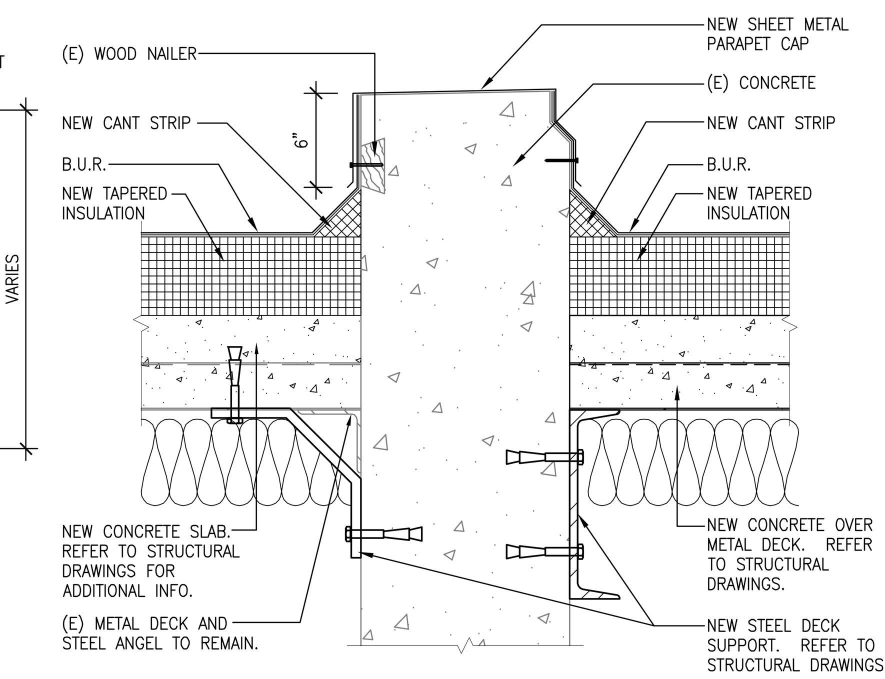

4 BUILT UP ROOF DETAIL
1 1/2" = 1'-0"

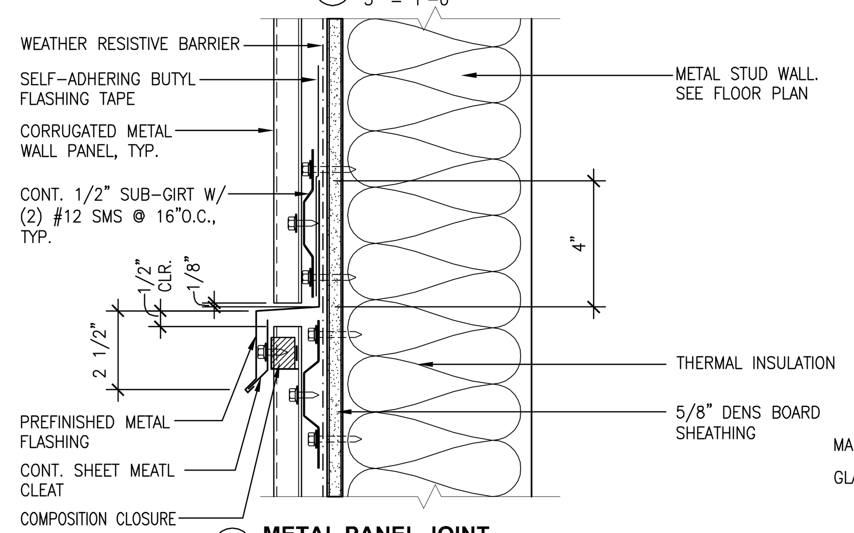

23 **METAL PANEL JOINT**
3" = 1'-0"

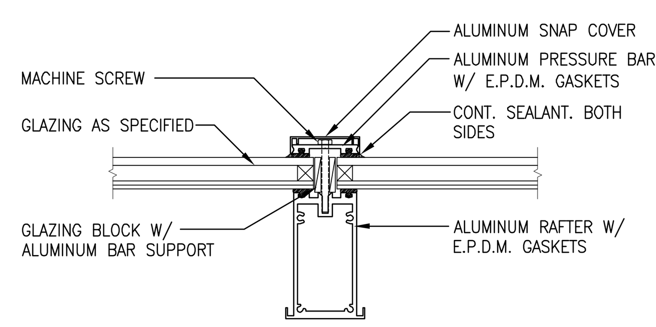

18 TYPICAL SKYLIGHT RAFTER
3" = 1'-0"

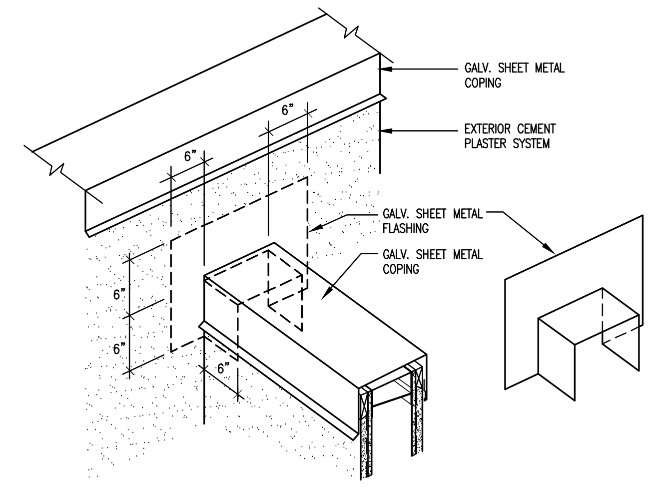

FLASHING AT MID-WALL CONDITION

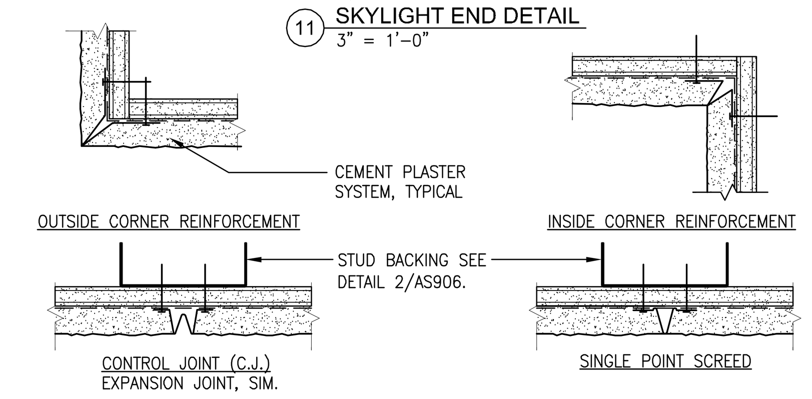

8 CEMENT PLASTER ACCESSORIES
3" = 1'-0"

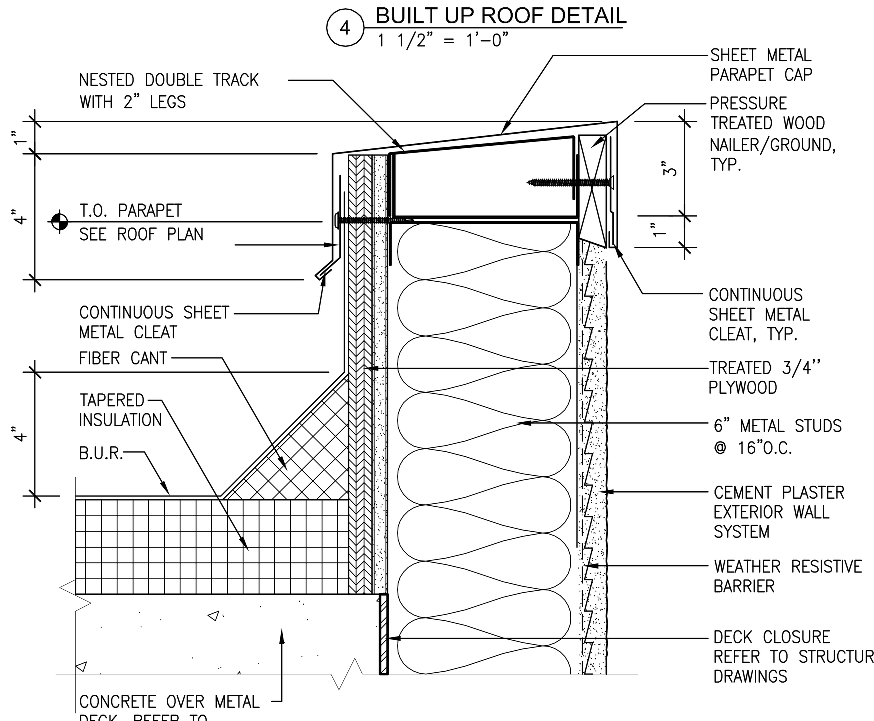

3 PARAPET CAP DETAIL
3" = 1'-0"

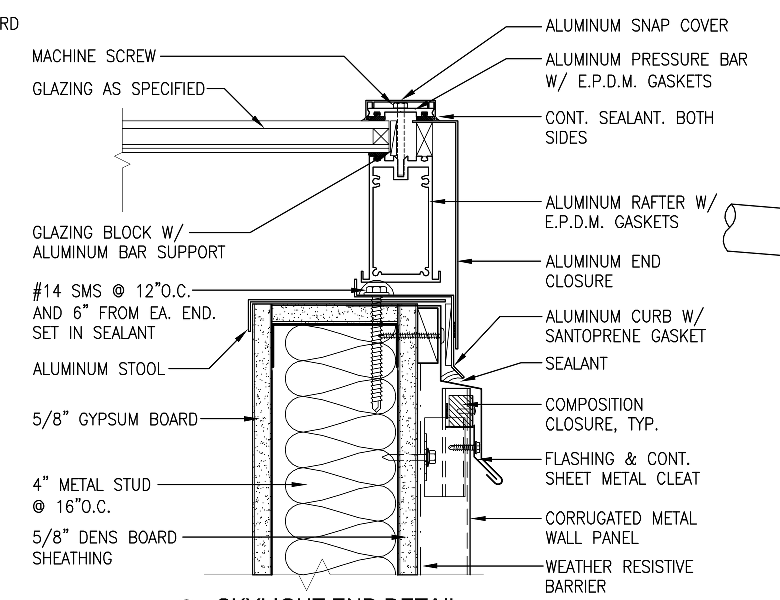

21 SKYLIGHT END DETAIL
3" = 1'-0"

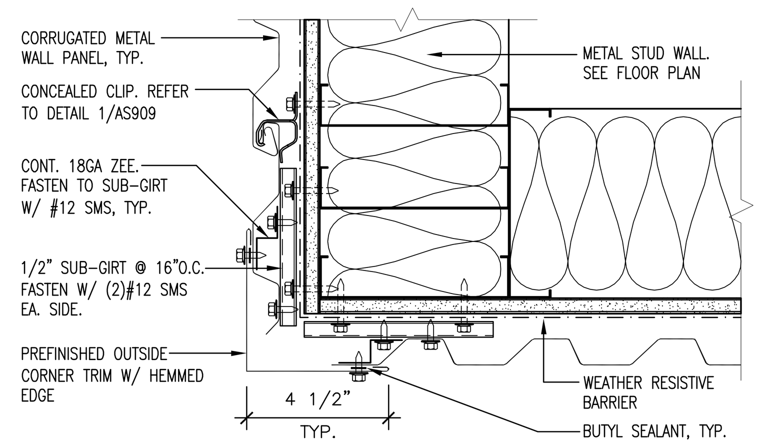

22 **METAL PANEL OUTSIDE CORNER**
3" = 1'-0"

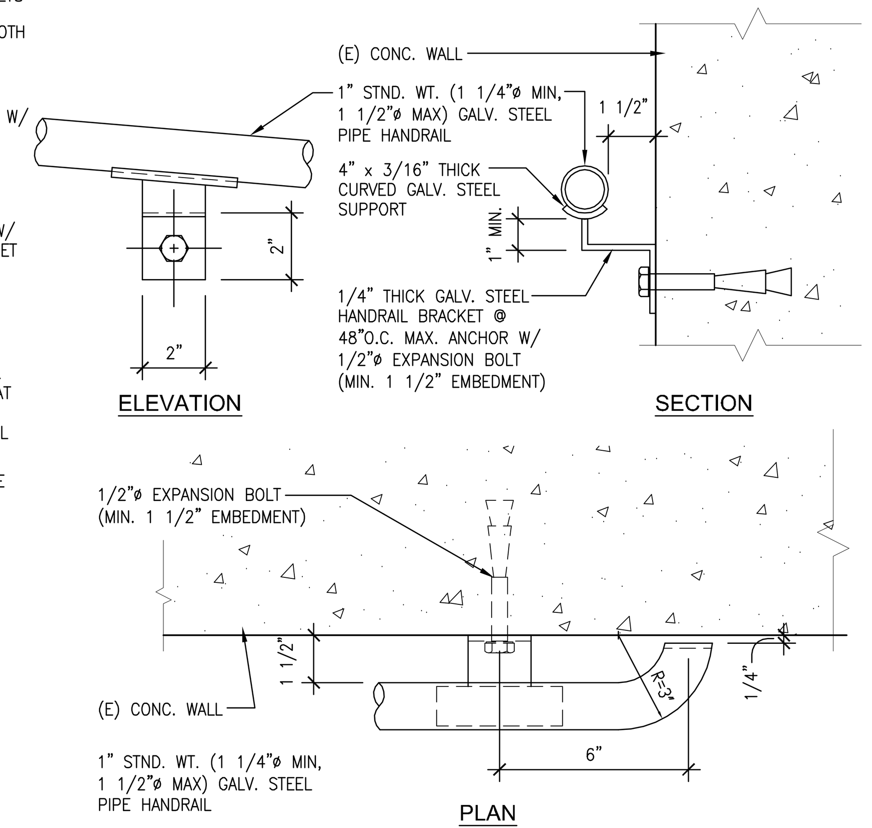

17 GALV. HAND RAIL @ CONC. WALL
3" = 1'-0"

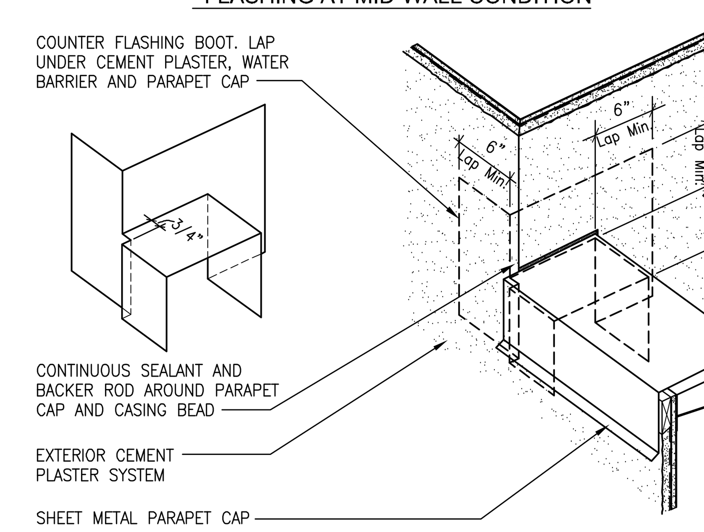

COUNTER FLASHING BOOT LOW PARAPET TO HIGH WALL

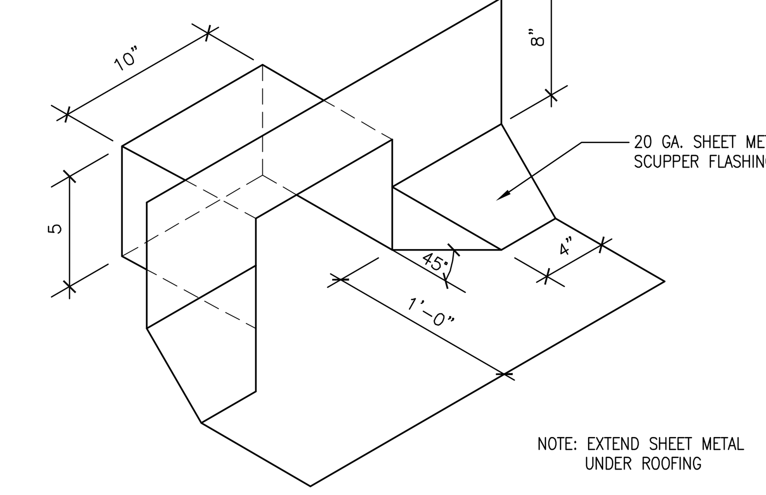

7 SCUPPER FLASHING ISOMETRIC
1 1/2" = 1'-0"

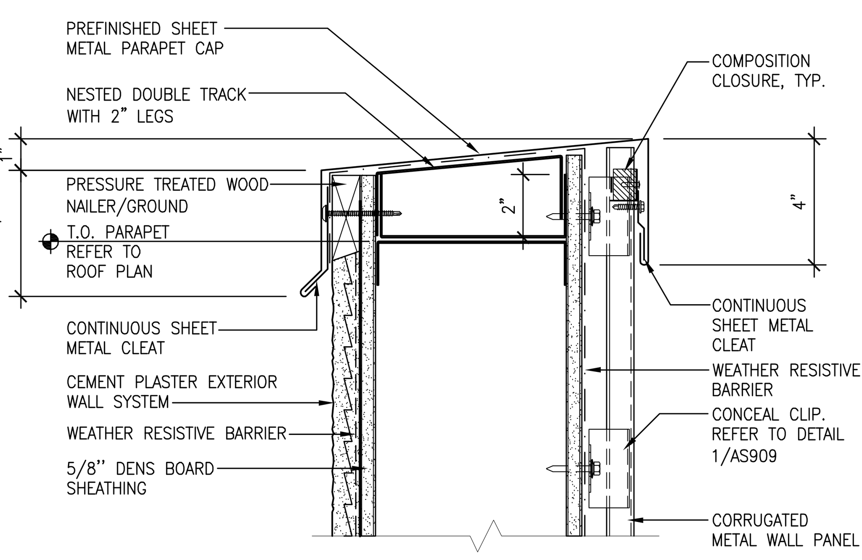

2 PARAPET CAP DETAIL
3" = 1'-0"

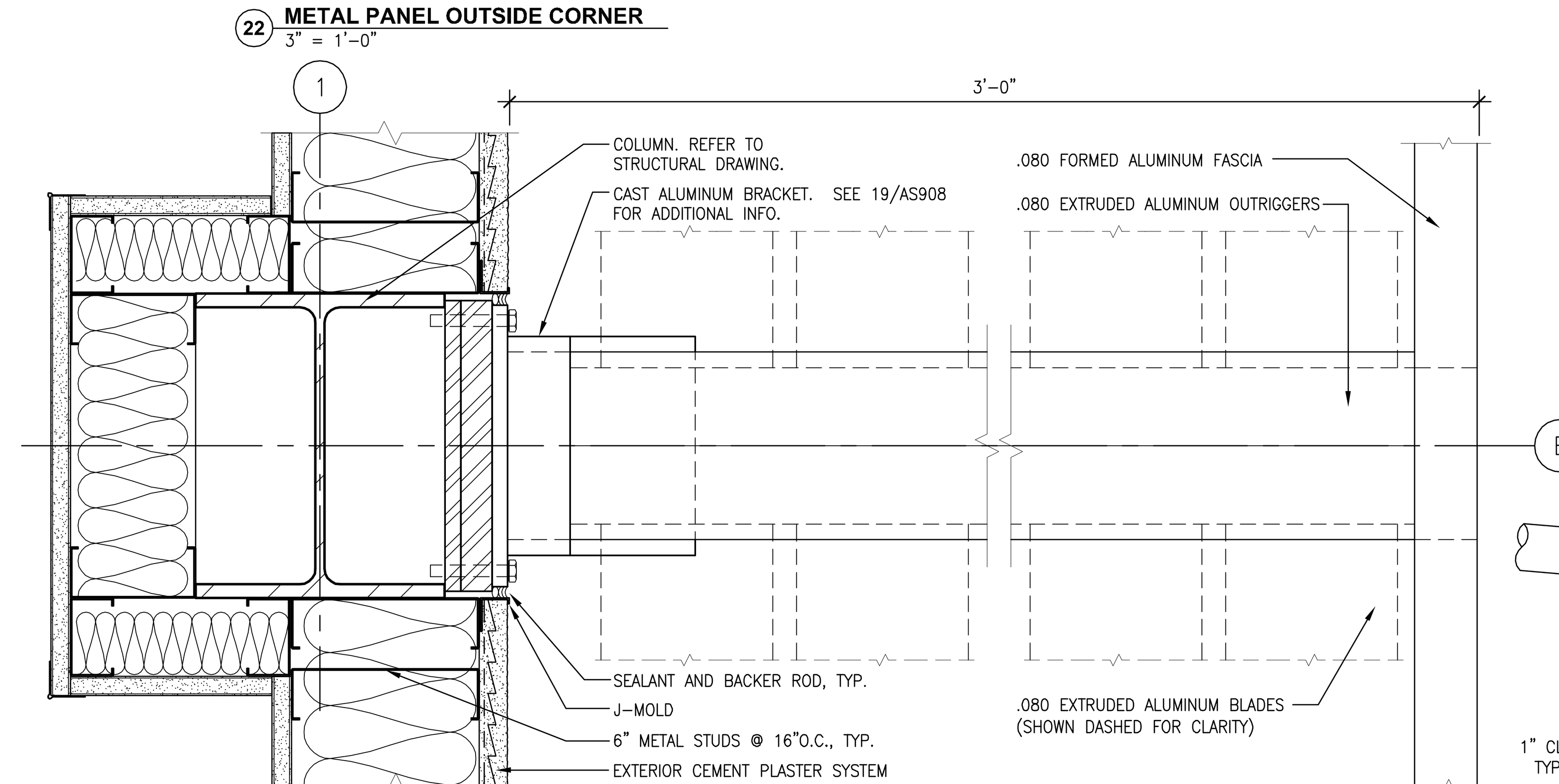

20 ALUMINUM EXTERIOR SUN SCREEN AT WF COL.
3" = 1'-0"

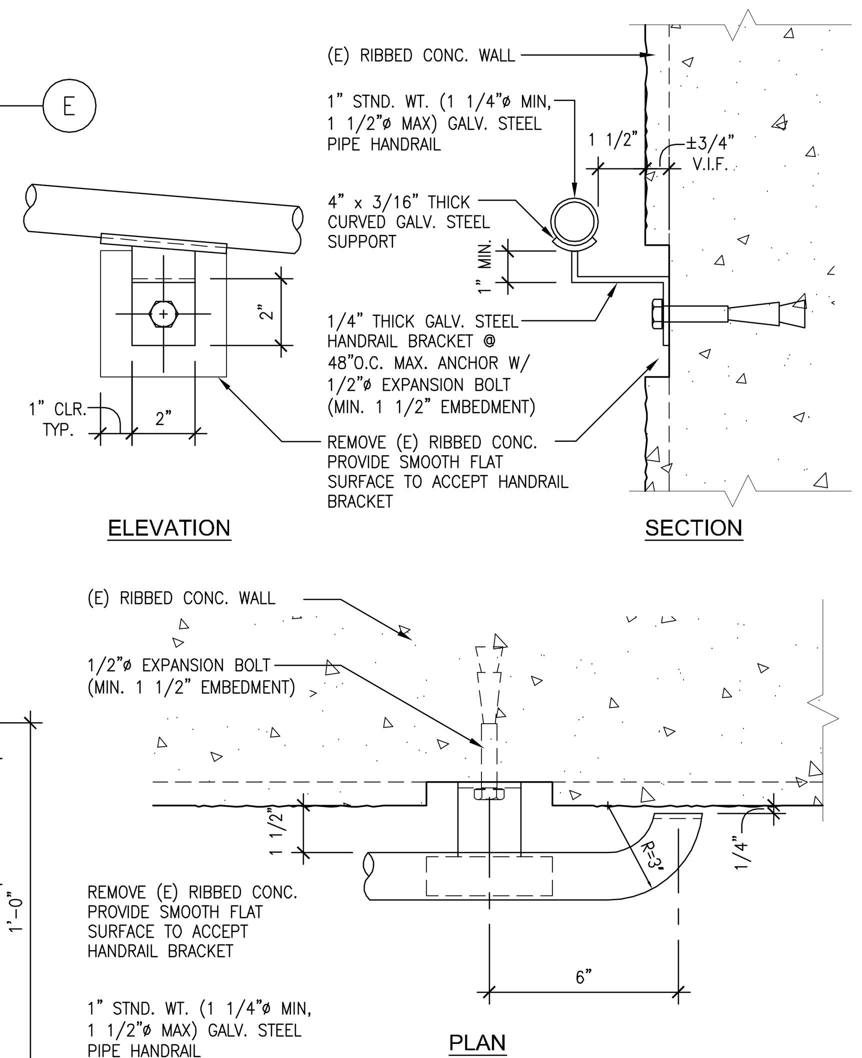

16 GALV. HAND RAIL @ TEXTURED CONC. WALL
3" = 1'-0"

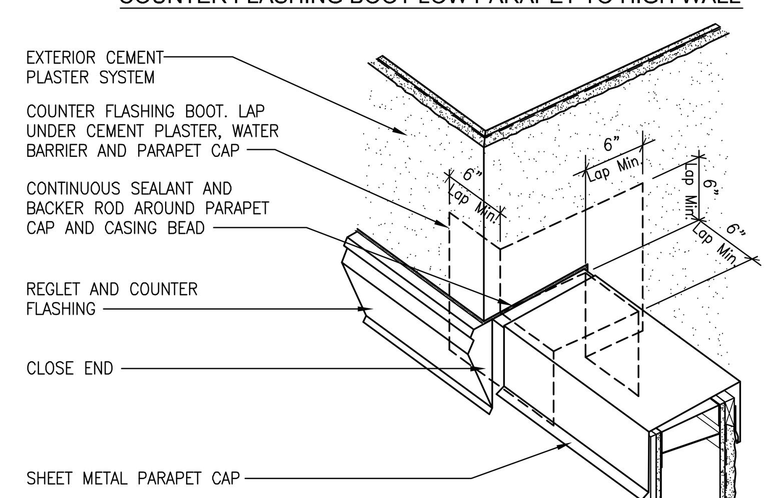

10 COUNTER FLASHING BOOT LOW PARAPET TO HIGH WALL
NO SCALE

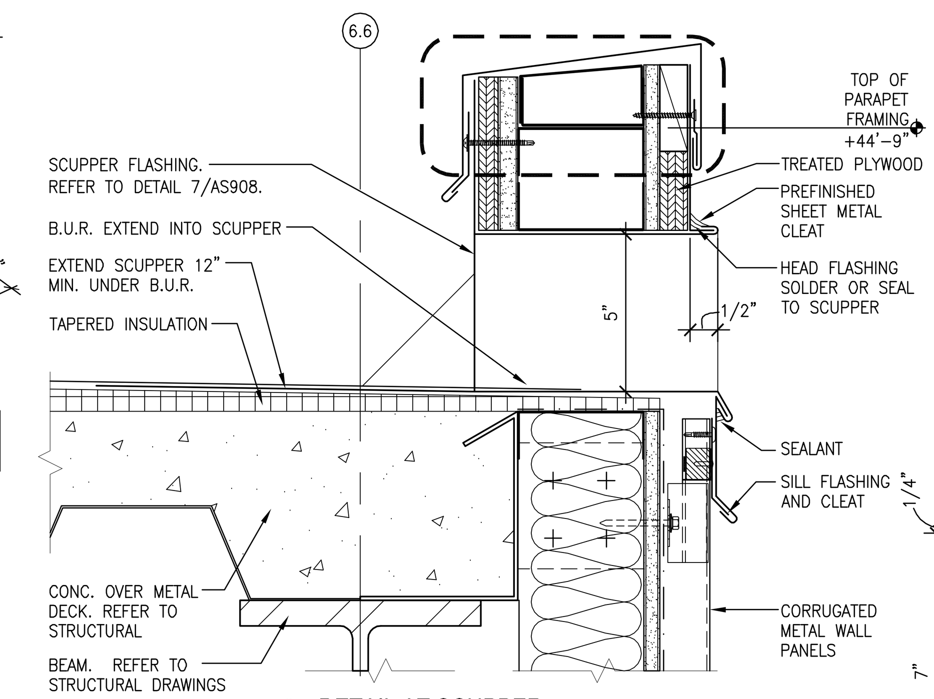

6 DETAIL AT SCUPPER
3" = 1'-0"

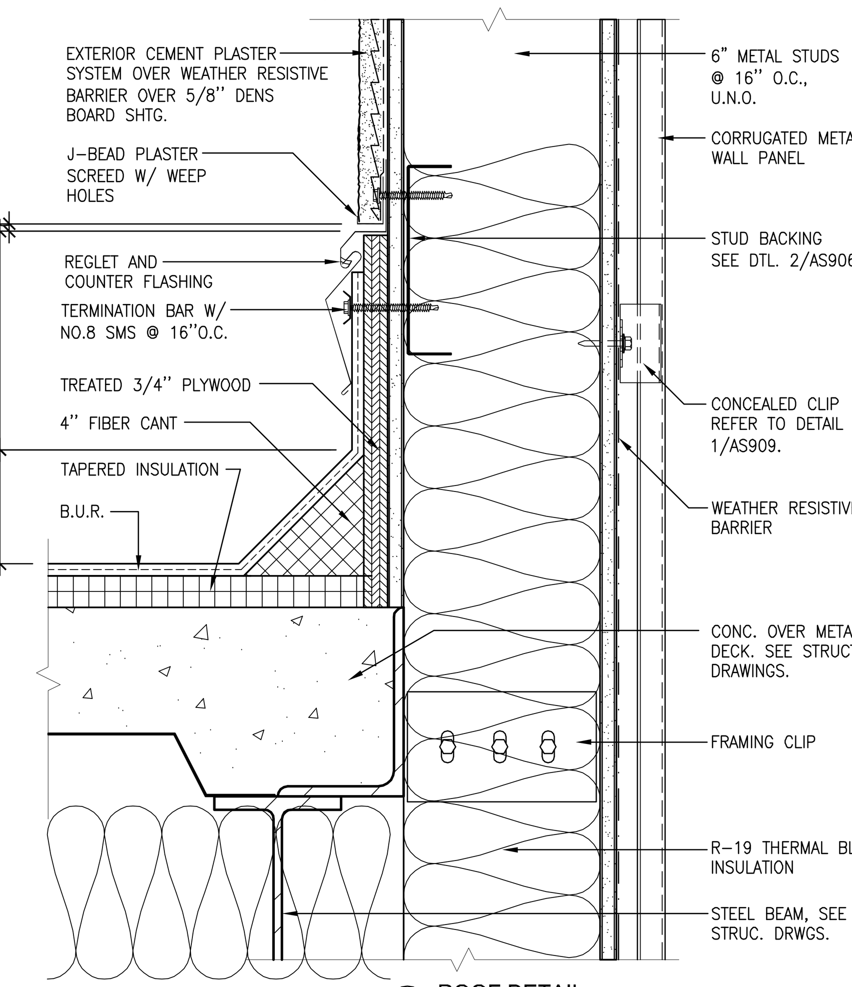

1 ROOF DETAIL
3" = 1'-0"

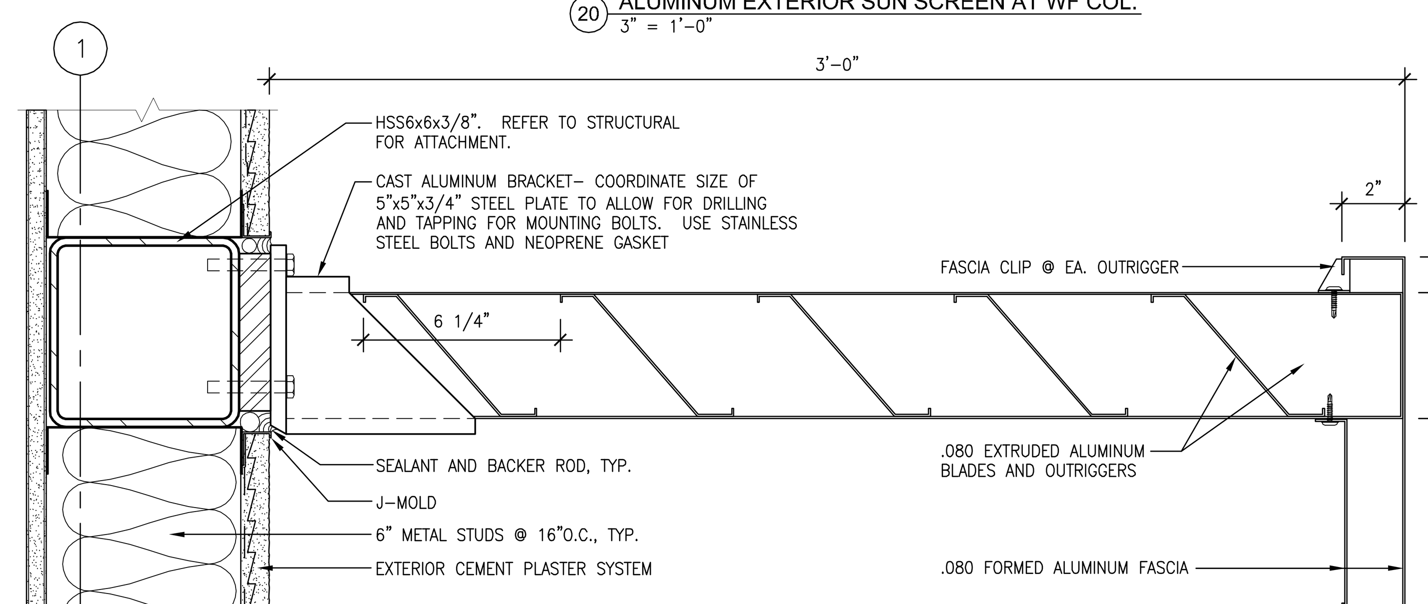

19 ALUMINUM EXTERIOR SUN SCREEN
3" = 1'-0"

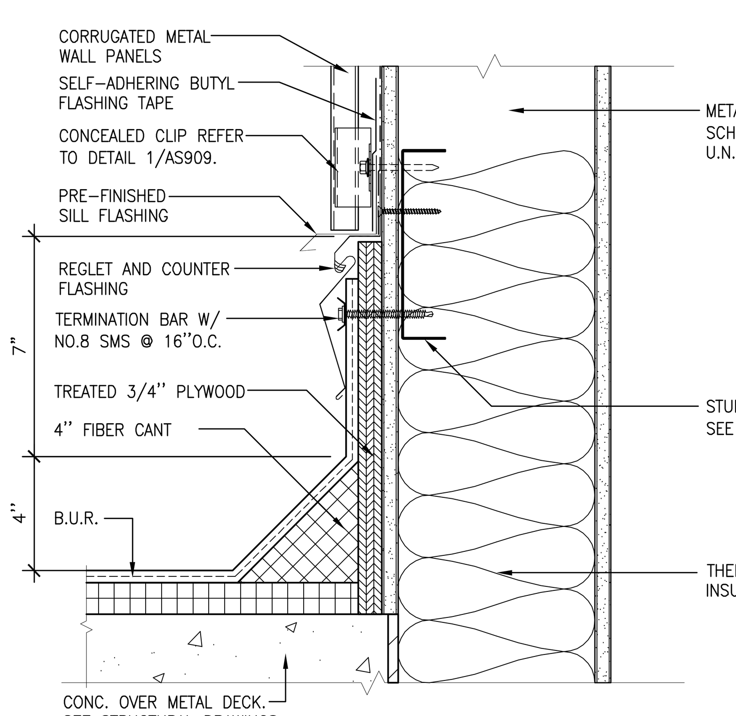

9 **ROOF DETAIL**
3" = 1'-0"

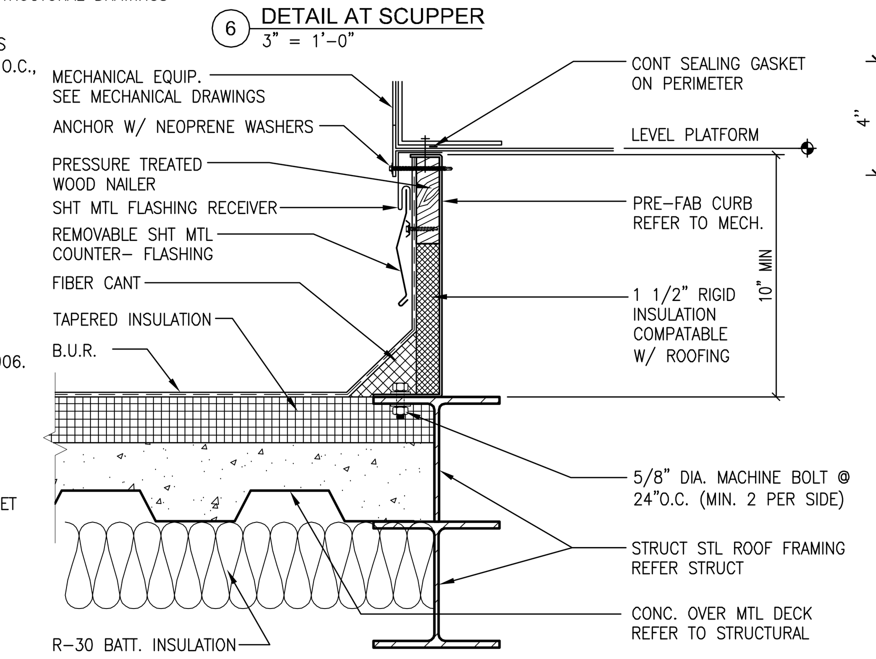

5 MECH. EQUIPMENT CURB PLATFORM
1 1/2" = 1'-0"

Revisions:	Date

CONSULTANTS:

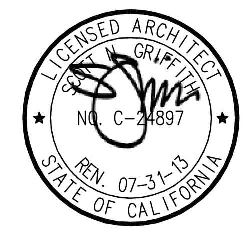

ARCHITECT/ENGINEERS:

HMC Architects
1827 E. Fir Avenue, Studio 103 / Fresno, CA 93720
T 559 322 2444 / www.hmcarchitects.com

Drawing Title
EXTERIOR DETAILS

Approved: Project Director

Project Title
BUILDING 24
SEISMIC CORRECTION
AND ADDITION

Location
VAMC FRESNO, CA

Date	Checked	Drawn
March 12, 2013	BB	CLO

Project Number
570-215

Building Number
24

Drawing Number
AS908
Dwg. 93 of 180

Office of Construction and Facilities Management

Department of Veterans Affairs

VA FORM 08-6231