System No. F-A-1092
October 30, 2006
F Rating – 3 Hr
T Rating – 0 Hr

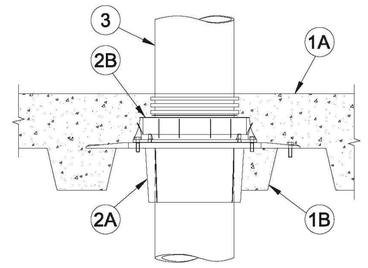

1. **Floor Assembly** – The fire-rated unprotected concrete and steel floor assembly shall be constructed of the materials and in the manner specified in the individual D900 Series designs in the UL Fire Resistance Directory and as summarized below:
   A. **Concrete** – Min 4-1/2 in. (114 mm) thick reinforced lightweight or normal weight (100-150 pcf or 1600-2400 kg/m³) concrete topping.
   B. **Steel Floor and Form Units*** – Composite or noncomposite max 3 in. (76 mm) deep fluted galv units as specified in the individual Floor-Ceiling design.
2. **Firestop Devices*** – The firestop devices are cast in place and permanently embedded during concrete placement or grouted in concrete assembly in accordance with accompanying installation instructions.
   A. **Firestop Device - Metal Deck Adapter*** – Adapter installed through opening in deck and secured with four sheet metal screws to deck in accordance with installation instructions.
      3M COMPANY – 3M Fire Barrier Cast-In Device Metal Deck Adapter, 6MDA
   B. **Firestop Device*** – Snapped into top of metal deck adapter in accordance with accompanying installation instructions. The device shall be trimmed flush with top surface of floor.
      3M COMPANY – 3M Fire Barrier Cast-In Device, 6MCID
3. **Through Penetrants** – One metallic pipe, tubing or conduit installed within the firestop system. Pipe, tubing or conduit to be rigidly supported on both sides of floor assembly. The following types of metallic pipes, tubing or conduits may be used:
   A. **Steel Pipe** – Nom 6 in. (152 mm) diam Schedule 5 (or heavier) steel pipe.
   B. **Iron Pipe** – Nom 6 in. (152 mm) diam cast or ductile iron pipe.
   C. **Conduit** – Nom 6 in. (152 mm) diam steel conduit.
   D. **Copper Tubing** – Nom 6 in. (152 mm) diam Type L (or heavier) copper tubing.
   E. **Copper Pipe** – Nom 6 in. (152 mm) diam Regular (or heavier) copper pipe.
4. **Packing Material** – Min 2 in. (51 mm) thickness of min 4 pcf (64 kg/m³) mineral wool batt insulation shall be tightly packed within the firestop device around the penetrant, flush with the top surface of floor.

*Bearing the UL Classification Mark

Through Penetrations | **Metallic Pipes** | 1000 Series | Concrete | **FA**

This material was extracted and drawn by 3M Fire Protection Products from the 2006 edition of the UL Fire Resistance Directory.

3M Fire Protection Products
www.3m.com/firestop
F-A-1092 • 1 of 1
Product Support Line: 1-800-328-1687
Choose option 4 for FAX ON DEMAND
82

10 PIPE THROUGH RATED FLOOR/ CEILING
NTS

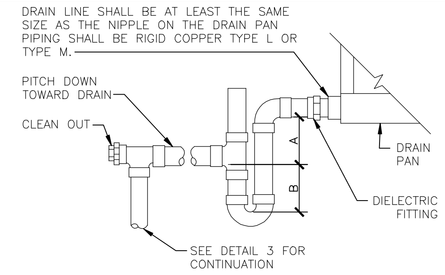

NOTE:
1. DIELECTRIC FITTING TO BE USED WHEN TWO DISSIMILAR METALS ARE TO BE CONNECTED.

UNIT TYPE	A	B
DRAW THRU	2" [50mm] PLUS X	X
BLOW THRU	1" [25mm] MINIMUM	2X

WHERE X = STATIC PRESSURE IN PAN

7 FAN COIL UNIT DRAIN TRAP DETAIL
NTS

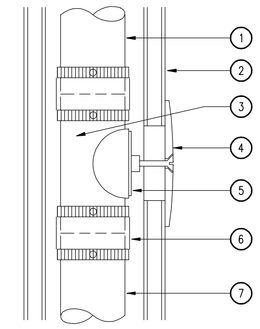

1. VENT STACK
2. FACE OF WALL
3. SANITARY TEE
4. CHROME PLATED COVER & SCREW
5. THREADED PLUG
6. NO-HUB COUPLING STAINLESS STEEL COVER
7. DRAIN LINE

4 WALL CLEANOUT (WCO)
NTS

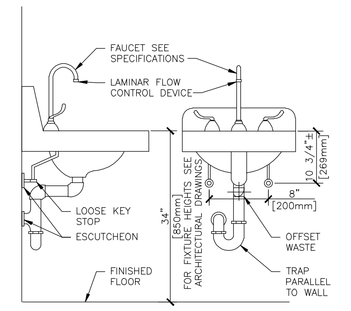

1 TYPICAL WHEELCHAIR LAVATORY DETAIL
NTS

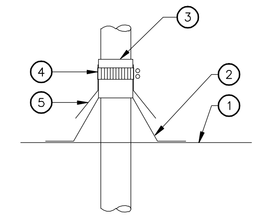

1. FINISHED ROOF.
2. SHEET METAL FLASHING.
3. SILICONE SEAL ALL AROUND.
4. SCREW BAND.
5. COUNTERFLASHING.

8 PIPE THROUGH THE ROOF
NTS

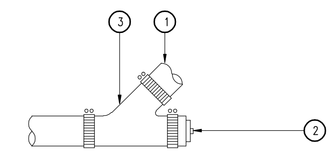

1. LINE EXTENSION BELOW FLOOR TO FIXTURE.
2. CAST IRON FERRULE & BRASS PLUG.
3. WYE AT END OF RUN.

5 CLEANOUT IN ATTIC (C.O.)
NTS

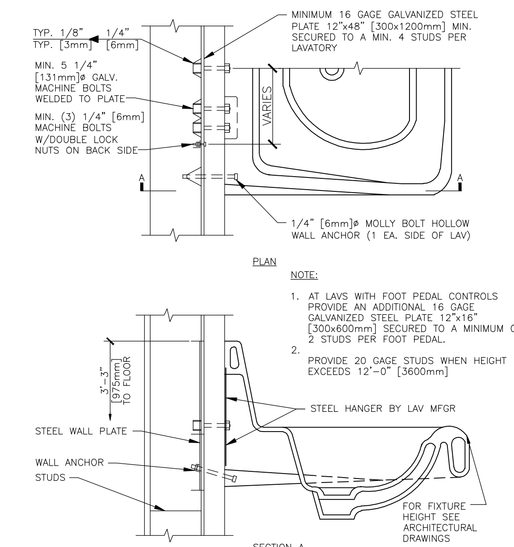

NOTE:
1. AT LAVS WITH FOOT PEDAL CONTROLS PROVIDE AN ADDITIONAL 16 GAGE GALVANIZED STEEL PLATE 12"x16" [300x600mm] SECURED TO A MINIMUM OF 2 STUDS PER FOOT PEDAL.
2. PROVIDE 20 GAGE STUDS WHEN HEIGHT EXCEEDS 12'-0" [3600mm]

2 LAVATORY MOUNTING DETAIL
NTS

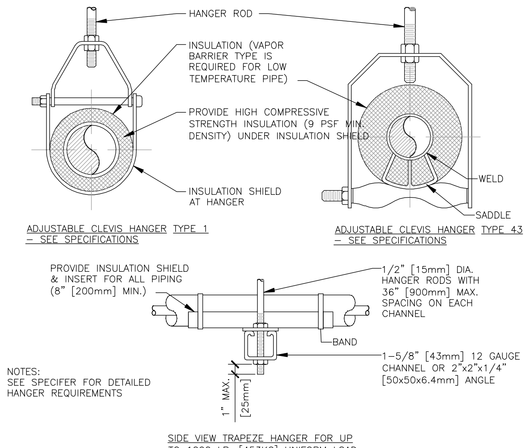

NOTES:
SEE SPECIFER FOR DETAILED HANGER REQUIREMENTS

SIDE VIEW TRAPEZE HANGER FOR UP TO 1000 LB. [453KG] UNIFORM LOAD

MAXIMUM PIPE/TUBING SUPPORT SPACING													
NOM. SIZE		2" [mm]	THRU 3/4 THRU	1 [25]	1 1/4 [32]	1 1/2 [40]	2 [50]	2 1/2 [65]	3 [75]	4 [100]	5 [125]	6 [150]	8 [200]
PIPE	FT.	7	7	7	9	10	11	12	14	16	17	19
	[mm]	[2100]	[2100]	[2100]	[2700]	[3000]	[3400]	[3700]	[4100]	[4900]	[5200]	[5800]
TUBING	FT.	5 FT	6	7	8	8	9	10	12	13	14	16
	[mm]	[1500]	[1800]	[2100]	[2400]	[2400]	[2700]	[3000]	[3700]	[4000]	[4100]	[4900]
NOTE: FOR TRAPEZE HANGER TAKE SPACING OF SMALLEST SIZE ON TRAPEZE.													

9 PIPE HANGERS
NTS

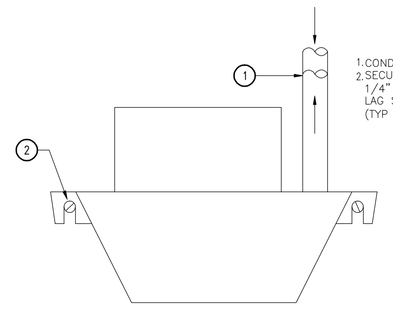

1. CONDENSATE DRAIN LINES
2. SECURE PUMP TO WALL WITH 1/4" DIA. X 1-1/2" LONG LAG SCREWS IN BLOCKING. (TYP OF 2)

6 CONDENSATE LIFT PUMP MOUNTING
NTS

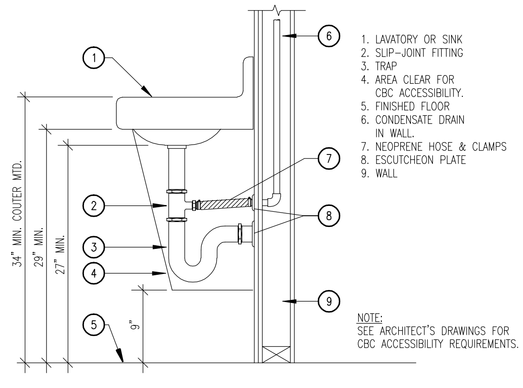

1. LAVATORY OR SINK
2. SLIP-JOINT FITTING
3. TRAP
4. AREA CLEAR FOR CBC ACCESSIBILITY.
5. FINISHED FLOOR
6. CONDENSATE DRAIN IN WALL.
7. NEOPRENE HOSE & CLAMPS
8. ESCUTCHEON PLATE
9. WALL

NOTE:
SEE ARCHITECT'S DRAWINGS FOR CBC ACCESSIBILITY REQUIREMENTS.

3 CONDENSATE TO TAILPIECE DETAIL
NTS

1 **PLUMBING DETAILS**
SCALE: NTS

Revisions:	Date

CONSULTANTS:

REGISTERED PROFESSIONAL ENGINEER GARON W. LENDONI NO. 33380 Exp. 6-30-14 MECHANICAL STATE OF CALIFORNIA

LP Consulting Engineers, Inc.
895 W. Ashlan Ave, Suite 101 Clovis, CA 93612
p 559-348-2130 - f 559-348-2131
www.lpengineers.com
Job #: 10-1666

LICENSED ARCHITECT NO. C-31897 EXP. 07-31-15 STATE OF CALIFORNIA

ARCHITECT/ENGINEERS:

HMC Architects
1827 E. Fir Avenue, Studio 103 / Fresno, CA 93720
T 559 322 2444 / www.hmcarchitects.com

Drawing Title: PLUMBING DETAILS	Project Title: BUILDING 24 SEISMIC CORRECTION AND ADDITION		Project Number: 570-215
			Building Number: 24
Approved Project Director	Location: VAMC FRESNO, CA		Drawing Number: PP501
	Date: March 12, 2013	Checked: K.K. / Drawn: D.N.	Dwg. 116 of 180

Office of Construction and Facilities Management
Department of Veterans Affairs

VA FORM 08-6231