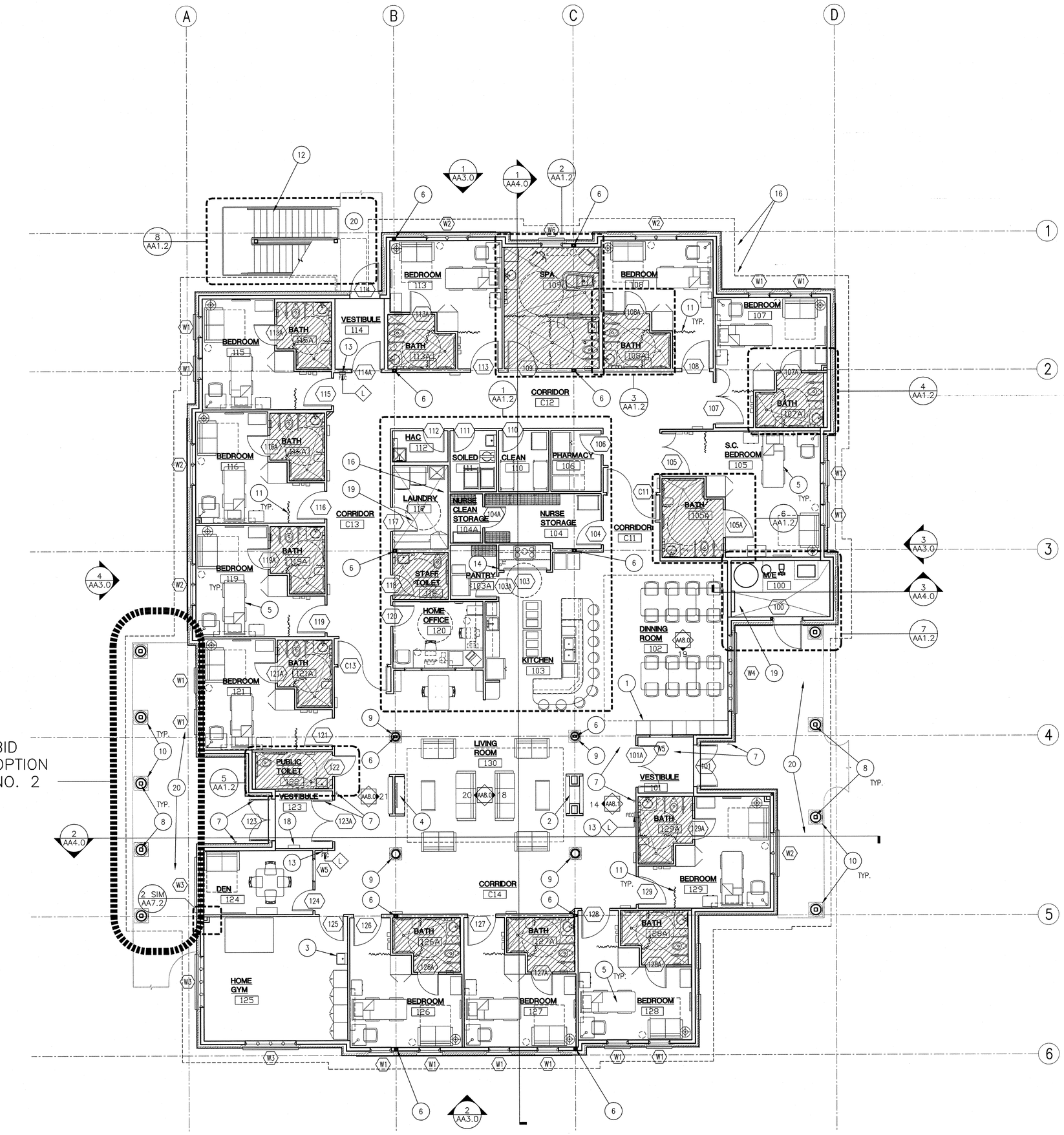

1 FIRST FLOOR PLAN

0' 4' 8' 12' 16' 20' 24'

SCALE: 1/8" = 1'-0"

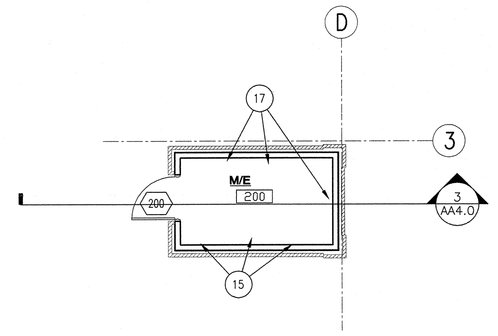

2 SECOND FLOOR PLAN

0' 4' 8' 12' 16' 20' 24'

SCALE: 1/8" = 1'-0"

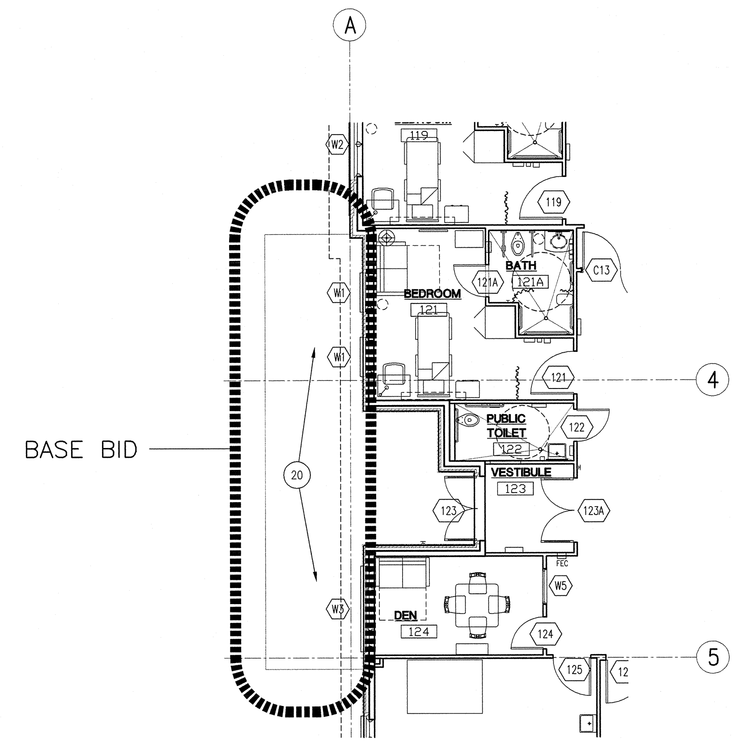

3 FIRST FLOOR PARTIAL PLAN

0' 4' 8' 12' 16' 20' 24'

SCALE: 1/8" = 1'-0"

GENERAL NOTES:

A. RE: AA1.1 FOR WALL TYPES AND DIMENSION PLAN.

B. RE: AA6.1 FOR FURNITURE AND EQUIPMENT PLAN.

C. RE: AA6.2 FOR DOOR SCHEDULE AND WINDOW TYPES.

D. RE: AA6.0 FOR FINISHES.

E. CONTRACTOR SHALL PROVIDE BLOCKING OR BACKING FOR ALL WALL MOUNTED AND RECESSED ACCESSORIES AND EQUIPMENT. ASSURE THAT ALL REQUIRED BACKING IS INSTALLED IN WALLS PRIOR TO INSTALLING DRYWALL. THIS INCLUDES BACKING FOR WALL-MOUNTED DOORSTOPS.

F. PROVIDE MOISTURE RESISTANT GYPSUM WALLBOARD AT WALLS IN ROOMS EXPOSED TO MOISTURE, INCLUDING BUT NOT LIMITED TO RESTROOMS, PLUMBING WALLS WITH SINKS, HAC, LAUNDRY, SOILED, BATHROOMS AND SIMILAIR LOCATIONS.

G. PROVIDE 'J' TRIM AT ALL GYPSUM BOARD TRANSITIONS TO DISSIMILAR MATERIALS.

H. RE: AA8.0 FOR ACCESSORY / EQUIPMENT TYPES INDICATED.

I. RE: AA9.0 FOR REFLECTED CEILING PLAN.

J. EXTERIOR FINISH INFORMATION IS NOT INDICATED NOR DIMENSIONED ON FLOOR PLAN. REFER TO DIMENSION PLAN, EXTERIOR ELEVATIONS, AND BUILDING SECTIONS FOR ADDITIONAL INFORMATION.

K. THE HINGE SIDE OF ALL DOOR FRAMES SHALL BE MOUNTED 4" MIN. [0.102m] FROM ADJACENT PERPENDICULAR WALL U.N.O.

L. RE: MECHANICAL, PLUMBING, AND ELECTRICAL FOR ADDITIONAL INFORMATION.

M. COORDINATE WITH CIVIL DRAWINGS FOR AND BELOW GRADE ROOF DRAIN PIPING.

SHEET NOTES:

1. MILLWORK, RE: AA8.0 AND AA8.1 INTERIOR ELEVATIONS.
2. FIRE PLACE, RE: AA7.3-17.
3. SINK, CW/ PLUMBING.
4. ENTERTAINMENT CENTER, RE: AA8.0 INTERIOR ELEVATIONS.
5. BEDROOM FURNITURE SHOWN FOR COORDINATION. OWNER FURNISHED OWNER INSTALLED.
6. FIRE RATED COLUMN, WRAPPED IN (2) LAYERS TYPE 'X' GYPSUM BOARD.
7. LOCATION OF AUTOMATIC DOOR BUTTON, AND RELATED OPERATING DOOR LEAF.
8. COLUMN WITH INTUMESCENT PAINT.
9. PREMANUFACTURED PAINTED WOOD COLUMN.
10. PRECAST COMPOSITE COLUMN.
11. PRIVACY CURTAIN, TYP.
12. GALVANIZED EXTERIOR STEEL STAIR ASSEMBLY.
13. FIRE EXTINGUISHER CABINET, RE: AA7.3-4.
14. SURFACE MOUNTED FIRE EXTINGUISHER.
15. TELECOMMUNICATIONS EQUIPMENT, COORDINATE WITH TELECOMM DRAWINGS.
16. ELECTRICAL PANELS / SWITCH GEAR, COORDINATE WITH ELECTRICAL DRAWINGS.
17. MECHANICAL CONTROLS AND EQUIPMENT, COORDINATE WITH MECHANICAL DRAWINGS.
18. FIRE ALARM CONTROL PANEL, COORDINATE WITH FIRE PROTECTION DRAWINGS.
19. TOP OF CONCRETE SLAB ON GRADE SHALL BE SLOPED TO THE FLOOR DRAIN WITHIN THE ROOM INDICATED. FLOOR DRAIN ELEVATION TO BE ¾" [0.02m] BELOW ADJACENT FLAT SLAB ELEVATION.
20. CONCRETE PATIO, RE: CIVIL.

LEGEND:

LINE INDICATES NEW CONSTRUCTION

LINE INDICATES SOFFIT/ROOF ABOVE

HATCH INDICATES AREA OF ¾" [0.02m] RECESSED SLAB

REVISIONS	DATE

CSHQA

C.W. MOORE PLAZA
250 S. 5TH ST. BOISE, ID 83702
(208) 343-4635 FAX (208) 343-1858
http://www.cshqa.com

JOHN D. MAULIN, ARCHITECT
C.W. MOORE PLAZA
250 S. 5TH ST
BOISE, IDAHO
PHONE: 208-343-4635 FAX: 208-343-1858

THESE DRAWINGS AND SPECIFICATIONS, AS INSTRUMENTS OF SERVICE, ARE AND SHALL REMAIN THE PROPERTY OF THE ARCHITECT / ENGINEER WHETHER THE PROJECT FOR WHICH THEY ARE MADE IS EXECUTED OR NOT. THESE DRAWINGS AND SPECIFICATIONS SHALL NOT BE USED BY ANY PERSON OR ENTITY ON OTHER PROJECTS, FOR ADDITIONS TO THIS PROJECT, OR COMPLETION OF THIS PROJECT WHEN PHASED WITHOUT THE WRITTEN CONSENT OF CSHQA OR ITS AFFILIATES. Copyright ©2011

STAMP

LICENSED ARCHITECT AR.1706

JOHN D. MAULIN STATE OF IDAHO

DECEMBER 01, 2011

ORIGINAL DOCUMENT SIGNED BY ARCHITECT ON FILE WITH THE OWNER
ORIGINAL SIGNED BY: JOHN D. MAULIN
ORIGINAL DATE SIGNED: DECEMBER 01, 2011

CAD FILE NAME: 531-319_AA1.0.DWG

XREF FILE NAME:
531-319_xA_30X42TLBK.DWG
531-319_xA_BASE1.DWG
531-319_xA_Panel.dwg
531-319_AM2.3.dwg
531-319_AE4.2.dwg

DRAWING TITLE: FLOOR PLANS

APPROVED: CHIEF OF FACILITY MANAGEMENT SERVICE

APPROVED: MEDICAL CENTER DIRECTOR

PROJECT TITLE: BOISE VAMC NEW EXTENDED CARE UNIT BUILDING 'A' CLC

BUILDING NUMBER: 121 | CHECKED: DRD/JDM | DRAWN: BKS

LOCATION: VAMC BOISE, IDAHO

DATE: 12/01/2011

PROJECT NO. 531-319

DRAWING NO. AA1.0

DWG 03 OF 58

DEPARTMENT OF VETERANS AFFAIRS

Username: tmontgomery
Dec 05, 2011 - 1:41pm
Q:\2010\10101.0\Arch\02_Drawings\531-319_AA1.0.dwg

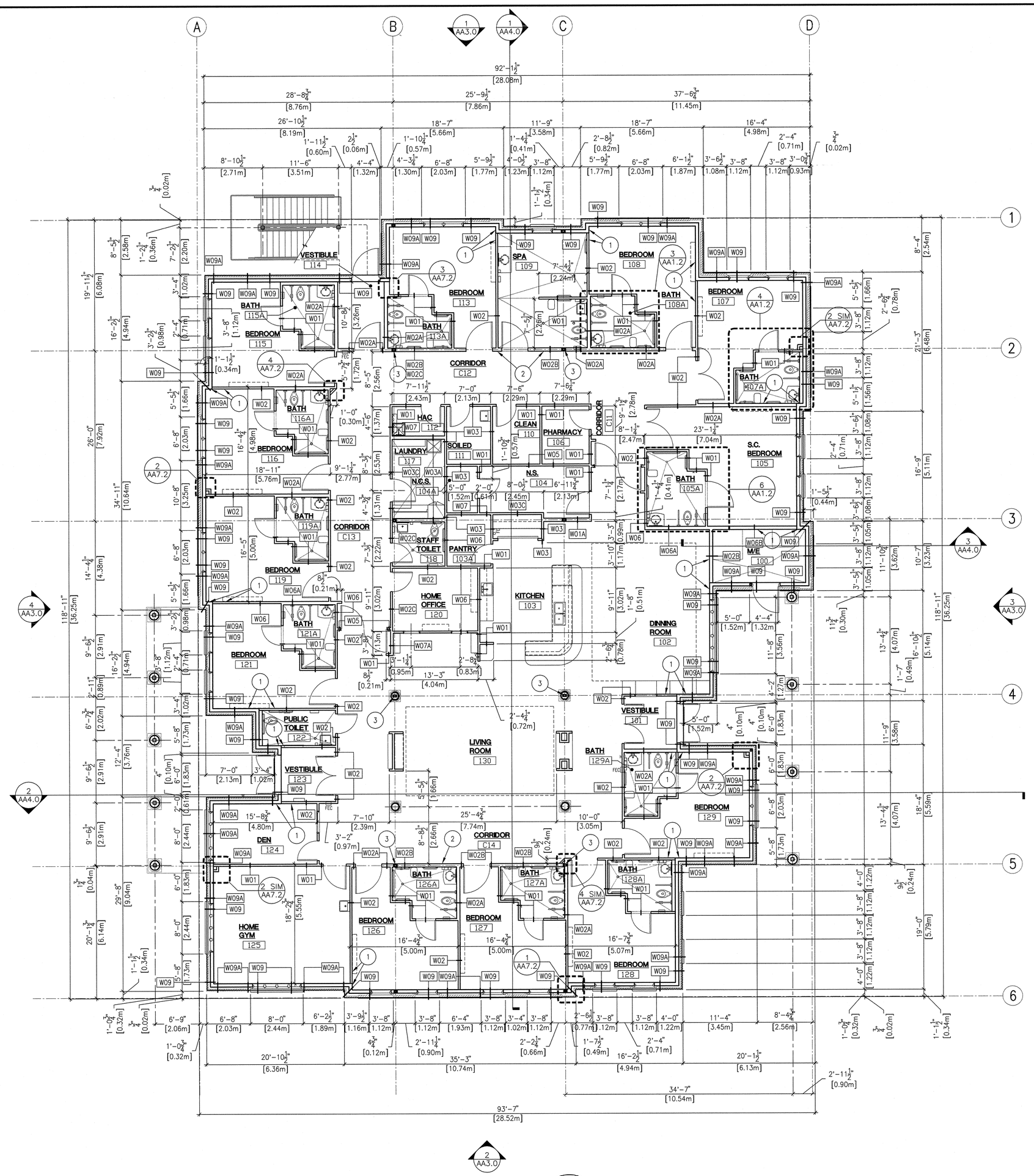

1 FIRST FLOOR DIMENSION PLAN

0' 4' 8' 12' 16' 20' 24'

SCALE: 1/8" = 1'-0"

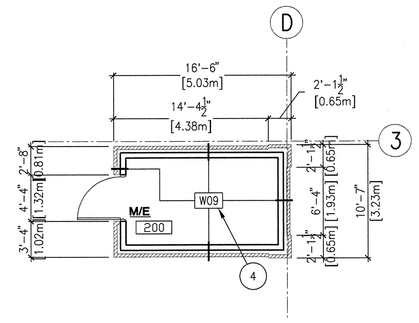

2 SECOND FLOOR PLAN BUILDING 'A'

0' 4' 8' 12' 16' 20' 24'

SCALE: 1/8" = 1'-0"

GENERAL NOTES:

A. PARTITION DIMENSIONS ARE GIVEN TO THE FACE OF STUD UNLESS OTHERWISE NOTED.

B. MASONRY DIMENSIONS ARE GIVEN TO FACE OF MASONRY AND TO THE FACE OF ROUGH OPENINGS.

C. DOOR AND WINDOW OPENING LOCATIONS ARE DIMENSIONED TO ROUGH OPENING OR CENTERLINE OF OPENING. COORDINATE WITH DOOR SCHEDULE AND WINDOW TYPES, SHEET AA6.2.

D. CONTRACTOR SHALL PROVIDE BLOCKING OR BACKING FOR ALL WALL-MOUNTED AND RECESSED ACCESSORIES AND EQUIPMENT. ASSURE THAT ALL REQUIRED BACKING IS INSTALLED IN WALLS PRIOR TO INSTALLING DRYWALL. THIS INCLUDES BACKING FOR WALL-MOUNTED DOORSTOPS.

E. GYPSUM WALL BOARD SHALL EXTEND FULL HEIGHT OF WALL TO UNDERSIDE OF DECK ABOVE UNLESS OTHERWISE NOTED. SEE WALL TYPES.

F. PENETRATIONS THROUGH RATED ASSEMBLIES SHALL BE FIRE STOPPED IN ACCORDANCE WITH NFPA STANDARDS.

WALL TYPES:

W01 — NON-RATED PARTITION
16mm (5/8") GYPSUM WALL BOARD EACH SIDE OF 92mm (3 5/8") METAL STUDS (U.O.N) @ 406mm (16") O.C. TO 150mm (6") ABOVE CEILING (U.O.N.); BRACE AT 1219mm (48") O.C. ALTERNATING TO STRUCTURE ABOVE.

W01A — NON-RATED PARTITION
SAME AS W01 EXCEPT WITH 150mm (6") METAL STUDS.

W02 — NON-RATED SOUND WALL
16mm (5/8") GYPSUM WALL BOARD EACH SIDE OF 92mm (3 5/8") METAL STUDS (U.O.N.) @ 406mm (16") O.C.; EXTEND TO DECK ABOVE; TAPE JOINTS ABOVE CEILING. PROVIDE SOUND BATT INSULATION FROM FINISH FLOOR TO DECK ABOVE.

W02A — NON-RATED SOUND WALL
SAME AS W02 EXCEPT WITH 150mm (6") METAL STUDS

W02B — NON-RATED SOUND AND SHEAR WALL
SAME AS W02A EXCEPT WITH 16mm (5/8") SURE-BOARD, RE: STRUCTURAL.

W02C — NON-RATED SOUND AND SHEAR WALL
SAME AS W02 EXCEPT WITH 16mm (5/8") SURE-BOARD, RE: STRUCTURAL.

W03 — 1-HOUR FIRE RATED WALL
16mm (5/8") GYPSUM WALL BOARD EACH SIDE OF 92mm (3 5/8") METAL STUDS @ 406mm (16") O.C.; EXTEND TO DECK ABOVE; FIRE TAPE JOINTS ABOVE CEILING; FIRESAFE JOINTS AND PENETRATIONS.

W03A — 1-HOUR FIRE RATED WALL
SAME AS W03 EXCEPT WITH 150mm (6") METAL STUDS

W03B — 1-HOUR FIRE RATED SHEAR WALL
SAME AS W03A EXCEPT WITH 16mm (5/8") SURE-BOARD RE: STRUCTURAL.

W03C — 1-HOUR FIRE RATED SHEAR WALL
SAME AS W03 EXCEPT WITH 16mm (5/8") SURE-BOARD, RE: STRUCTURAL.

W04 — 1-HOUR FIRE RATED SOUND WALL
16mm (5/8") GYPSUM WALL BOARD EACH SIDE OF 92mm (3 5/8") METAL STUDS @ 406mm (16") O.C.; EXTEND TO DECK ABOVE; FIRE TAPE JOINTS ABOVE CEILING; FIRESAFE JOINTS AND PENETRATIONS. PROVIDE SOUND BATT INSULATION FROM FINISH FLOOR TO DECK ABOVE.

W05 — 1-HOUR RATED SMOKE BARRIER
16mm (5/8") GYPSUM WALL BOARD EACH SIDE OF 92mm (3 5/8") METAL STUDS @ 406mm (16") O.C.; EXTEND TO DECK ABOVE; FIRE TAPE JOINTS ABOVE CEILING; FIRESAFE JOINTS AND PENETRATIONS.

W06 — 1-HOUR RATED SMOKE BARRIER AND SOUND WALL
16mm (5/8") GYPSUM WALL BOARD EACH SIDE OF 92mm (3 5/8") METAL STUDS @ 406mm (16") O.C.; EXTEND TO DECK ABOVE; FIRE TAPE JOINTS ABOVE CEILING; FIRESAFE JOINTS AND PENETRATIONS. PROVIDE SOUND BATT INSULATION FROM FINISH FLOOR TO DECK ABOVE.

W06A — 1-HOUR RATED SMOKE BARRIER AND SOUND WALL
SAME AS W06 EXCEPT WITH 150mm (6") METAL STUDS

W06B — 1-HOUR RATED SMOKE BARRIER, SOUND WALL AND SHEAR WALL
SAME AS W06A EXCEPT WITH 16mm (5/8") SURE-BOARD, RE: STRUCTURAL

W07 — NON-RATED SHEAR WALL
16mm (5/8") GYPSUM WALL BOARD OR SURE-BOARD EACH SIDE OF 92mm (3 5/8") METAL STUDS (U.O.N.) @ 406mm (16") O.C.; EXTEND TO DECK ABOVE; TAPE JOINTS ABOVE CEILING. RE: STRUCTURAL FOR SURE-BOARD LOCATIONS.

W07A — 1-HOUR RATED SMOKE BARRIER, SOUND WALL AND SHEAR WALL
SAME AS W07 EXCEPT WITH 150mm (6") METAL STUDS

W08 — NON-RATED CHASE WALL
16mm (5/8") GYPSUM WALL BOARD ON ONE SIDE OF 92mm (3 5/8") METAL STUDS (U.O.N) @ 406mm (16") O.C. TO 150mm (6") ABOVE CEILING (U.O.N.); BRACE AT 1219mm (48") O.C. ALTERNATING TO STRUCTURE ABOVE.

W09 — 1-HOUR RATED TYPICAL EXTERIOR BEARING WALL
16mm (5/8") GYPSUM WALL BOARD ON INSIDE OF 150mm (6") STRUCTURAL STUDS @ 406mm (16") O.C.; VAPOR BARRIER; R-19 BATT INSULATION; 16mm (5/8") FIRE-RATED GLASS-MATT SHEATHING; BUILDING WRAP; 2" RIGID INSULATION; AIR SPACE AND BRICK VENEER.

W09A — 1-HOUR RATED EXTERIOR BEARING SHEAR WALL
SAME AS W09 EXCEPT REPLACE FIRE-RATED GLASS MATT SHEATHING WITH 16mm (5/8") SURE-BOARD, RE: STRUCTURAL

NOTES:

1) REFER TO DETAILS AA7.2-12 THRU 18 FOR LATERAL BRACING OF WALLS, NON SLIP TRACKS, AND RATED WALL TERMINATIONS.

#SHEETNOTES:

1. INTERIOR WALL FRAMING TO ALIGN WITH EXTERIOR WALL FRAMING.
2. WALL FRAMING TO BE CENTERED ON GRIDLINE.
3. FIRE RATED COLUMN: WRAP WITH (2) LAYERS 5/8" GYPSUM BOARD.
4. ADD ¾" PLYWOOD TO INSIDE OF WALLS FROM FLOOR TO 8'-0" A.F.F. WITH GYPSUM BOARD ABOVE.

LEGEND:

——— LINE INDICATES NEW CONSTRUCTION

- - - - - LINE INDICATES SOFFIT/UPPER CABINET ABOVE

Username: bsmith
Dec 02, 2011 - 12:17pm
Q:\2010\10101.0\Arch\02_Drawings\531-319_AA1.1.dwg

REVISIONS	DATE

CSHQA

C.W. MOORE PLAZA
250 S. 5TH ST. BOISE, ID 83702
(208) 343-4635 FAX (208) 343-1858
http://www.cshqa.com

JOHN D. MAULIN, ARCHITECT
C.W. MOORE PLAZA
250 S. 5TH ST
BOISE, IDAHO
PHONE: 208-343-4635 FAX: 208-343-1858

THESE DRAWINGS AND SPECIFICATIONS, AS INSTRUMENTS OF SERVICE, ARE AND SHALL REMAIN THE PROPERTY OF THE ARCHITECT / ENGINEER WHETHER THE PROJECT FOR WHICH THEY ARE MADE IS EXECUTED OR NOT. THESE DRAWINGS AND SPECIFICATIONS SHALL NOT BE USED BY ANY PERSON OR ENTITY ON OTHER PROJECTS, FOR ADDITIONS TO THIS PROJECT, OR COMPLETION OF THIS PROJECT, WHEN PHASED, WITHOUT THE WRITTEN CONSENT OF CSHQA OR ITS AFFILIATES. Copyright ©2011

STAMP
LICENSED ARCHITECT AR.1706
JOHN D. MAULIN
STATE OF IDAHO
DECEMBER 01, 2011

ORIGINAL DOCUMENT SIGNED BY ARCHITECT ON FILE WITH THE OWNER
ORIGINAL SIGNED BY: JOHN D. MAULIN
ORIGINAL DATE SIGNED: DECEMBER 01, 2011

CAD FILE NAME: 531-319_AA1.1.DWG
XREF FILE NAME: 531-319_xA_30X42TLBK.DWG
531-319_xA_BASE1.DWG

DRAWING TITLE: DIMENSION PLANS

APPROVED: CHIEF OF FACILITY MANAGEMENT SERVICE

APPROVED: MEDICAL CENTER DIRECTOR

PROJECT TITLE: BOISE VAMC
NEW EXTENDED CARE UNIT
BUILDING 'A' CLC

BUILDING NUMBER: 121
CHECKED: DRD/JDM
DRAWN: BKS
LOCATION: VAMC BOISE, IDAHO

DATE: 12/01/2011
PROJECT NO.: 531-319
DRAWING NO.: AA1.1
DWG 04 OF 58

DEPARTMENT OF VETERANS AFFAIRS

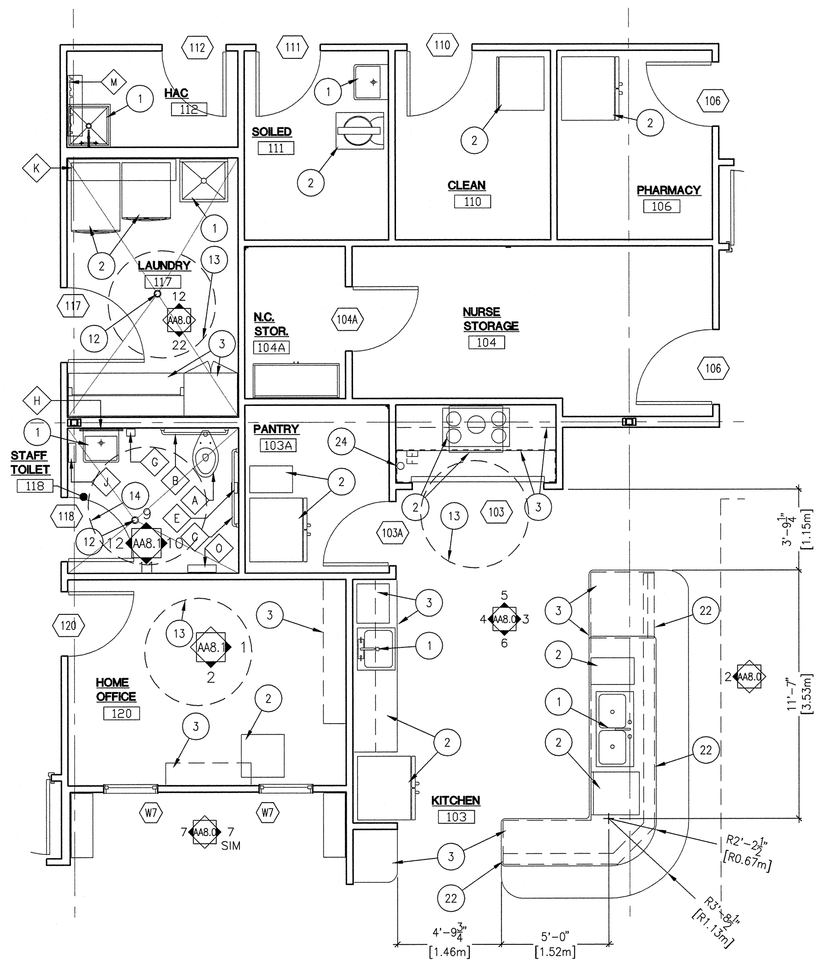

1 ENLARGED CORE ROOMS

0' 2' 4' 6' 8' 10' 12' SCALE: 1/4" = 1'-0"

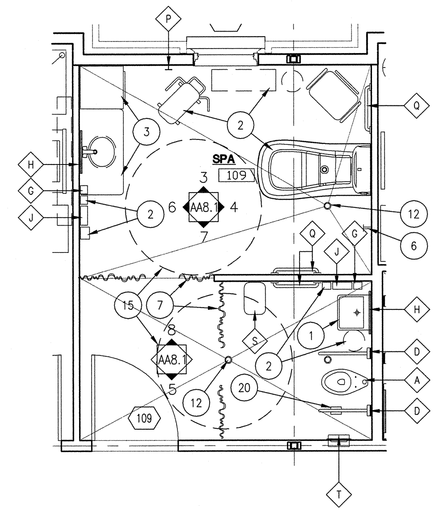

2 ENLARGED SPA PLAN

0' 2' 4' 6' 8' 10' 12' SCALE: 1/4" = 1'-0"

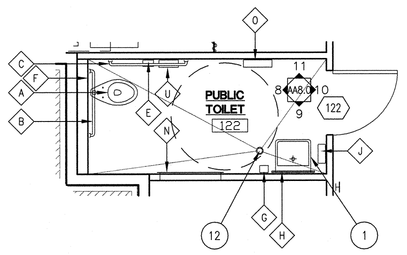

5 ENLARGED PUBLIC TOILET

0' 2' 4' 6' 8' 10' 12' SCALE: 1/4" = 1'-0"

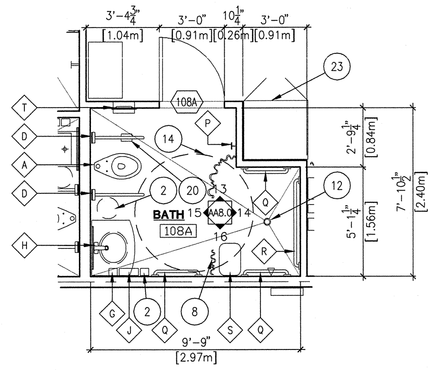

3 ENLARGED BATHROOM

0' 2' 4' 6' 8' 10' 12' SCALE: 1/4" = 1'-0"

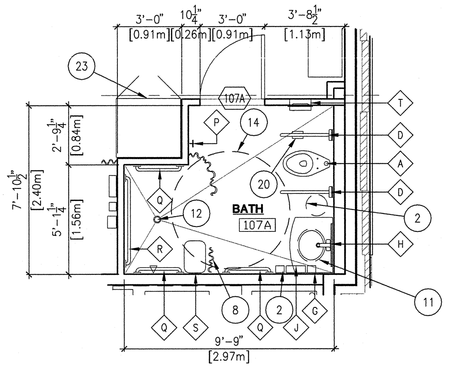

4 ENLARGED BATHROOM

0' 2' 4' 6' 8' 10' 12' SCALE: 1/4" = 1'-0"

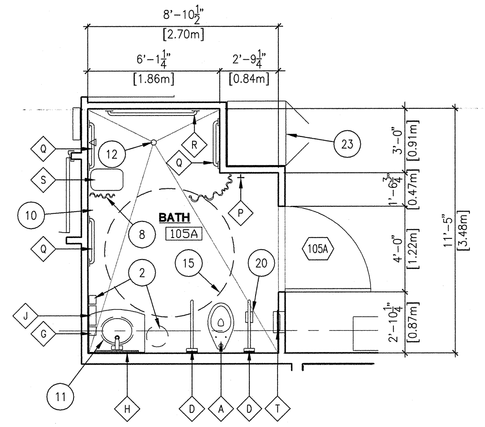

6 ENLARGED SC BATHROOM

0' 2' 4' 6' 8' 10' 12' SCALE: 1/4" = 1'-0"

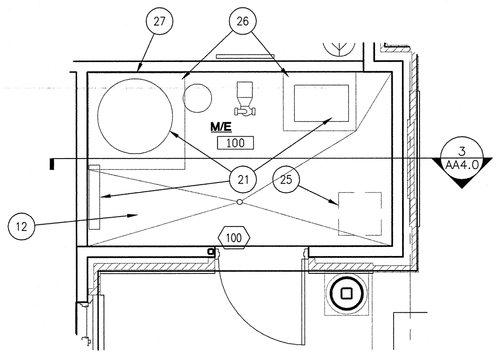

7 ENLARGED M/E

0' 2' 4' 6' 8' 10' 12' SCALE: 1/4" = 1'-0"

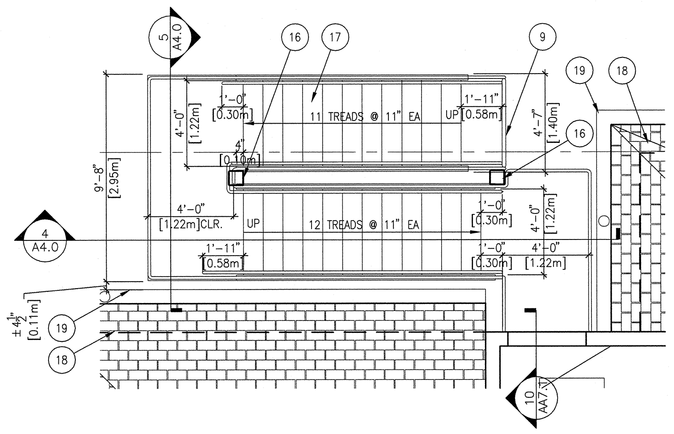

8 ENLARGED STAIR PLAN CLC

0' 2' 4' 6' 8' 10' 12' SCALE: 1/4" = 1'-0"

GENERAL NOTES:

A. PARTITION DIMENSIONS ARE GIVEN TO THE FACE OF STUD UNLESS OTHERWISE NOTED.

B. MASONRY DIMENSIONS ARE GIVEN TO FACE OF MASONRY AND TO THE FACE OF ROUGH OPENINGS.

C. DOOR AND WINDOW OPENING LOCATIONS ARE DIMENSIONED TO ROUGH OPENING OR CENTERLINE OF OPENING. COORDINATE WITH DOOR SCHEDULE AND WINDOW TYPES, SHEET AA6.2.

D. CONTRACTOR SHALL PROVIDE BLOCKING OR BACKING FOR ALL WALL MOUNTED AND RECESSED ACCESSORIES AND EQUIPMENT. ASSURE THAT ALL REQUIRED BACKING IS INSTALLED IN WALLS PRIOR TO INSTALLING DRYWALL. THIS INCLUDES BACKING FOR WALL-MOUNTED DOORSTOPS.

E. GYPSUM WALL BOARD SHALL EXTEND FULL HEIGHT OF WALL TO UNDERSIDE OF DECK ABOVE UNLESS OTHERWISE NOTED. SEE WALL TYPES.

F. SEE SHEET AA6.0 FOR FINISHES.

G. SEE AA8.0-1 FOR ACCESSORY AND EQUIPMENT MOUNTING HEIGHTS.

H. SOME FURNISHINGS ARE SHOWN FOR COORDINATION.

SHEET NOTES:

1. SINK, RE: PLUMBING.
2. EQUIPMENT/FURNITURE, RE: AA6.1.
3. MILLWORK, RE: AA8.0 AND AA8.1 INTERIOR ELEVATIONS.
4. RATED COLUMN SURROUND, WRAP COLUMN IN (2) LAYERS 5/8" TYPE "X" GYPSUM BOARD.
5. V.V.-WALL MOUNTED CLOCK.
6. HOSE BIBB, RE: PLUMBING.
7. PRIVACY CURTAIN.
8. SHOWER CURTAIN.
9. GATE ASSEMBLY WITH METAL PAINTED SIGN "AUTHORIZED PERSONNEL ONLY". RE: AA7.1-6.
10. NURSE CALL, RE: TELECOMMUNICATION.
11. INTEGRAL SINK AND COUNTERTOP, RE: AA7.3-21 AND PLUMBING.
12. SLOPED SLAB TO FLOOR DRAIN, RE: PLUMBING.
13. DASHED CIRCLE INDICATES 5'-0"ø CLEAR TURNING AREA.
14. DASHED CIRCLE INDICATES 5'-6"ø CLEAR TURNING AREA.
15. DASHED CIRCLE INDICATES 6'-0"ø CLEAR TURNING AREA.
16. COLUMN, RE: STRUCTURAL.
17. GALVANIZED STAIR.
18. MANSARD ROOF ASSEMBLY.
19. GUTTER ASSEMBLY.
20. TOILET PAPER DISPENSER INTEGRAL WITH FOLD-UP GRAB BAR.
21. PLUMBING EQUIPMENT, RE: PLUMBING.
22. WALL ASSEMBLY BELOW COUNTER.
23. PATIENT CABINET. RE: FURNISH SCHEDULE.
24. SURFACE MOUNTED FIRE EXTINGUISHER.
25. DASHED LINES INDICATE AREA DESIGNATED FOR FIRE RISER / BACKFLOW PREVENTER.
26. CONCRETE HOUSEKEEPING PAD, COORDINATE WITH STRUCTURAL AND PLUMBING.
27. PROVIDE SOLID CONTINUOUS BLOCKING FOR LENGTH OF WALL AT 5'-0"[1.52m] A.F.F. TO SECURE WATER TANK TO.

FIXTURE LEGEND:

COORDINATE WITH AA8.0-1 FOR ADDTIONAL INFORMATION

A. WATER CLOSET, CW/ PLUMBING
B. 36" STAINLESS STEEL GRAB BAR
C. 42" STAINLESS STEEL GRAB BAR
D. FOLD-UP STAINLESS STEEL GRAB BAR
E. TOILET PAPER DISPENSER (V.C.)
F. SEAT COVER DISPENSER (V.C.)
G. SOAP DISPENSER (V.C.)
H. MIRROR
J. PAPER TOWEL DISPENSER (V.C.)
K. 5'-0" WIDE x 12" DEEP STAINLESS STEEL SHELF
L. SEMI-RECESSED FIRE EXTINGUISHER CABINET
M. SHELF WITH MOP AND BROOM HOLDERS AND HOOKS
N. SURFACE-MOUNTED BABY CHANGING STATION (V.C.)
O. SURFACE-MOUNTED SANITARY NAPKIN DISPENSER (V.C.)
P. ROBE HOOK
Q. 24" STAINLESS STEEL GRAB BAR
R. 48" STAINLESS STEEL GRAB BAR
S. FOLD-UP SHOWER SEAT
T. SEMI-RECESSED SANITARY NAPKIN DISPENSER (V.C.)
U. NAPKIN DISPOSAL (V.C.)

Username: tmontgomery
Dec 05, 2011 - 1:52pm
Q:\2010\10101.0\Arch\02_Drawings\531-319_AA1.2.dwg

REVISIONS	DATE

CSHQA

C.W. MOORE PLAZA
250 S. 5TH ST. BOISE, ID 83702
(208) 343-4635 FAX (208) 343-1858
http://www.cshqa.com

JOHN D. MAULIN, ARCHITECT
C.W. MOORE PLAZA
250 S. 5TH ST
BOISE, IDAHO
PHONE: 208-343-4635 FAX: 208-343-1858

THESE DRAWINGS AND SPECIFICATIONS, AS INSTRUMENTS OF SERVICE, ARE AND SHALL REMAIN THE PROPERTY OF THE ARCHITECT / ENGINEER WHETHER THE PROJECT FOR WHICH THEY ARE MADE IS EXECUTED OR NOT. THESE DRAWINGS AND SPECIFICATIONS SHALL NOT BE USED BY ANY PERSON OR ENTITY ON OTHER PROJECTS, FOR ADDITIONS TO THIS PROJECT, OR COMPLETION OF THIS PROJECT WHEN PHASED WITHOUT THE WRITTEN CONSENT OF CSHQA OR ITS AFFILIATES. Copyright ©2011

STAMP
LICENSED ARCHITECT AR 1706
JOHN D. MAULIN
STATE OF IDAHO
DECEMBER 01, 2011

ORIGINAL DOCUMENT SIGNED BY ARCHITECT ON FILE WITH THE OWNER
ORIGINAL SIGNED BY: JOHN D. MAULIN
ORIGINAL DATE SIGNED: DECEMBER 01, 2011

CAD FILE NAME:
531-319_AA1.2.DWG

XREF FILE NAME:
531-319_xA_30X24TLBK.DWG
531-319_xA_BASE1.DWG
531-319_FIXT LGND.DWG
531-319_xA_ROOF PLAN.DWG

DRAWING TITLE
ENLARGED FLOOR PLANS

APPROVED: CHIEF OF FACILITY MANAGEMENT SERVICE

APPROVED: MEDICAL CENTER DIRECTOR

PROJECT TITLE
BOISE VAMC
NEW EXTENDED CARE UNIT
BUILDING 'A' CLC

BUILDING NUMBER	CHECKED	DRAWN
121	DRD/JDM	BKS

LOCATION
VAMC BOISE, IDAHO

DATE
12/01/2011

PROJECT NO.
531-319

DRAWING NO.
AA1.2

DWG 05 OF 58

DEPARTMENT OF VETERANS AFFAIRS

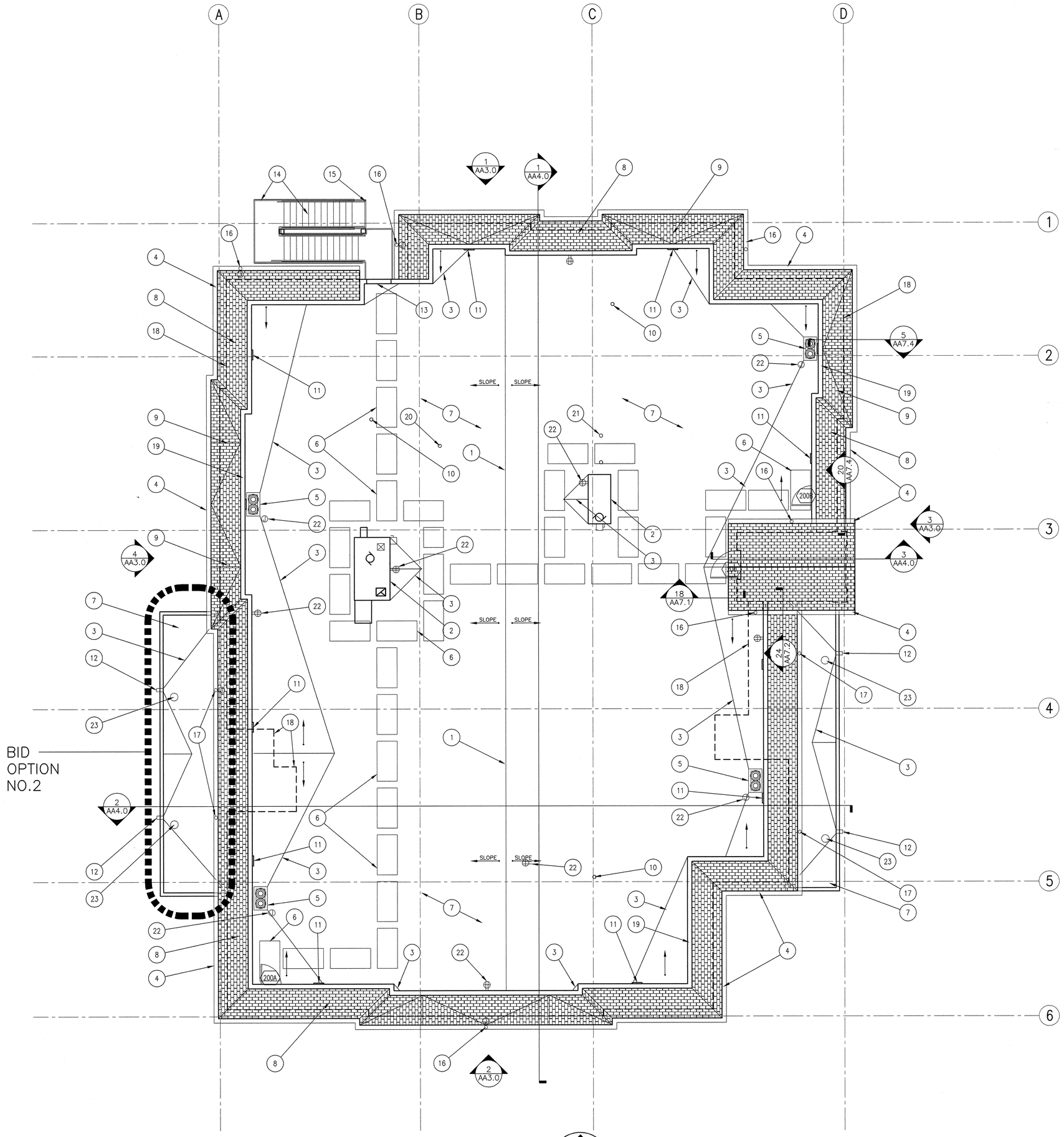

1 ROOF PLAN

0' 4' 8' 12' 16' 20' 24'

SCALE: 1/8" = 1'-0"

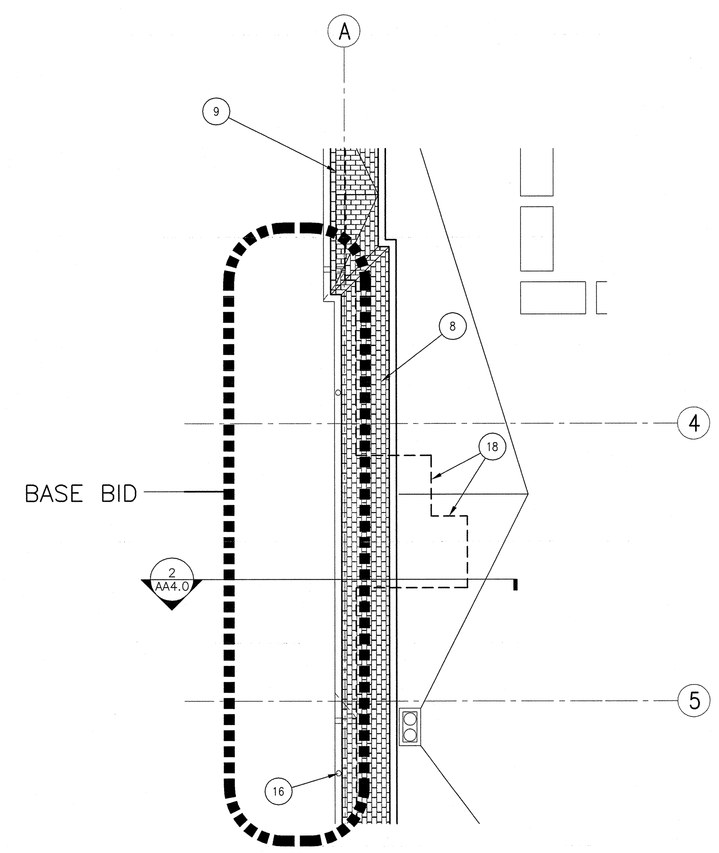

2 PARTIAL ROOF PLAN

0' 4' 8' 12' 16' 20' 24'

SCALE: 1/8" = 1'-0"

GENERAL NOTES:

A. ROOF TO HAVE ¼" PER FOOT SLOPE UNLESS NOTED OTHERWISE. CONTRACTOR TO VERIFY THAT ALL ROOF SURFACES HAVE POSITIVE DRAINAGE PRIOR TO INSTALLATION OF SINGLE PLY ROOF MEMBRANE.

B. REFER TO STRUCTURAL FOR BEARING ELEVATIONS.

C. ALL TAPERED INSULATION BOARDS TO BE POLYISOCYANURATE UNLESS NOTED OTHERWISE.

D. COORDINATE ALL ROOF PENETRATION LOCATIONS AND REQUIREMENTS WITH MECHANICAL, PLUMBING, AND ELECTRICAL DRAWINGS. PROVIDE FLASHING AND COUNTER FLASHING PER CONTRACT DOCUMENTS AND MANUFACTURER'S REQUIREMENTS.

E. THE CONTRACTOR SHALL VERIFY THAT ROOF DRAIN LOCATIONS INDICATED DO NOT INTERFERE WITH STRUCTURAL MEMBERS. IF A ROOF DRAIN LOCATION INDICATED INTERFERES WITH STRUCTURAL MEMBERS, CONTACT THE ARCHITECT IMMEDIATELY FOR DIRECTION PRIOR TO PROCEEDING WITH THE WORK.

F. THE CONTRACTOR SHALL PROVIDE TAPERED RIGID INSULATION CRICKETS AROUND ANY EQUIPMENT OR ANY OTHER ROOF MOUNTED ITEMS WHICH MAY OBSTRUCT THE FLOW OF NORMAL WATER DRAINAGE.

G. PROVIDE PROTECTION PADS ON SINGLE PLY ROOFING AT SERVICE SIDE OF ALL ROOF EQUIPMENT.

H. COORDINATE ALL ROOF MOUNTED EQUIPMENT CURBS WITH STRUCTURAL AND MECHANICAL DRAWINGS.

J. REFERENCE SECTIONS FOR ADDITIONAL DETAILS.

SHEET NOTES:

1. RIDGE LINE, CW/AA4.0 BUILDINGS SECTIONS.
2. ROOFTOP MECHANICAL EQUIPMENT. RE:AA7.1-24, CW/ MECHANICAL.
3. ROOF CRICKET.
4. GUTTER, RE: AA7.1-15.
5. ROOF DRAIN AND OVERFLOW DRAIN, RE: AA7.1-20.
6. ROOF PAD. RE: AA7.1-3.
7. SINGLE PLY ROOF MEMBRANE. RE: AA7.1-3.
8. MANSARD ROOF WITH ASPHALT SHINGLES, RE: AA7.1-13.
9. GABLE ROOF OVERBUILD WITH ASPHALT SHINGLES, RE: AA7.4-5.
10. VENT THROUGH ROOF. RE:AA7.1-19, CW/PLUBMING.
11. WALL LOUVER. RE:AA7.1-14.
12. THROUGH WALL SCUPPER. RE:AA7.1-11.
13. CURB AT ROOF, RE:AA7.1-10.
14. STEEL STAIR ASSEMBLY BELOW.
15. STEEL GATE ASSEMBLY BELOW.
16. DOWNSPOUT/ RAINWATER COLLECTOR ASSEMBLY, RE: AA7.1-12.
17. DOWNSPOUT ONLY ONTO LOWER ROOF.
18. EXTERIOR WALL BELOW.
19. COPING CAP.
20. DRYER VENT, RE: MECHANICAL.
21. ROOF MOUNTED HOSE BIBB, CW/ PLUMBING.
22. ROOF TOP ELECTRICAL RECPTACLE, RE: ELECTRICAL.
23. OVERFLOW DRAIN.

LEGEND:

LINE INDICATES NEW CONSTRUCTION

LINE INDICATES FACE OF WALL BELOW

ASHPAHLT SHINGLE

Username: bsmith
Dec 02, 2011 - 12:29pm
Q:\2010\10101.0\Arch\DL_Drawings\531-319_AA2.0.dwg

REVISIONS	DATE

CSHQA

C.W. MOORE PLAZA
250 S. 5TH ST. BOISE, ID 83702
(208) 343-4635 FAX (208) 343-1858
http://www.cshqa.com

JOHN D. MAULIN, ARCHITECT
C.W. MOORE PLAZA
250 S. 5TH ST
BOISE, IDAHO
PHONE: 208-343-4635 FAX: 208-343-1858

THESE DRAWINGS AND SPECIFICATIONS, AS INSTRUMENTS OF SERVICE, ARE AND SHALL REMAIN THE PROPERTY OF THE ARCHITECT / ENGINEER WHETHER THE PROJECT FOR WHICH THEY ARE MADE IS EXECUTED OR NOT. THESE DRAWINGS AND SPECIFICATIONS SHALL NOT BE USED BY ANY PERSON OR ENTITY ON OTHER PROJECTS, FOR ADDITIONS TO THIS PROJECT, OR COMPLETION OF THIS PROJECT-WHEN PHASED-WITHOUT THE WRITTEN CONSENT OF CSHQA OR ITS AFFILIATES. Copyright ©2011

STAMP

LICENSED ARCHITECT AR 1705

JOHN D. MAULIN STATE OF IDAHO

DECEMBER 01, 2011

ORIGINAL DOCUMENT SIGNED BY ARCHITECT ON FILE WITH THE OWNER
ORIGINAL SIGNED BY: JOHN D. MAULIN
ORIGINAL DATE SIGNED: DECEMBER 01, 2011

CAD FILE NAME:
531-319_AA2.0.DWG

XREF FILE NAME:
531-319_xA_30X42TLBK.DWG
531-319_xA_ROOF PLAN.DWG
531-319_AM2.2.DWG
531-319_AP2.2.DWG
531-319_AE2.4.DWG

DRAWING TITLE
ROOF PLAN

APPROVED: CHIEF OF FACILITY MANAGEMENT SERVICE

APPROVED: MEDICAL CENTER DIRECTOR

PROJECT TITLE
BOISE VAMC
NEW EXTENDED CARE UNIT
BUILDING 'A' CLC

BUILDING NUMBER	CHECKED	DRAWN
121	DRD/JDM	BKS

LOCATION
VAMC BOISE, IDAHO

DATE
12/01/2011

PROJECT NO.
531-319

DRAWING NO.
AA2.0

DWG 06 OF 58

DEPARTMENT OF VETERANS AFFAIRS