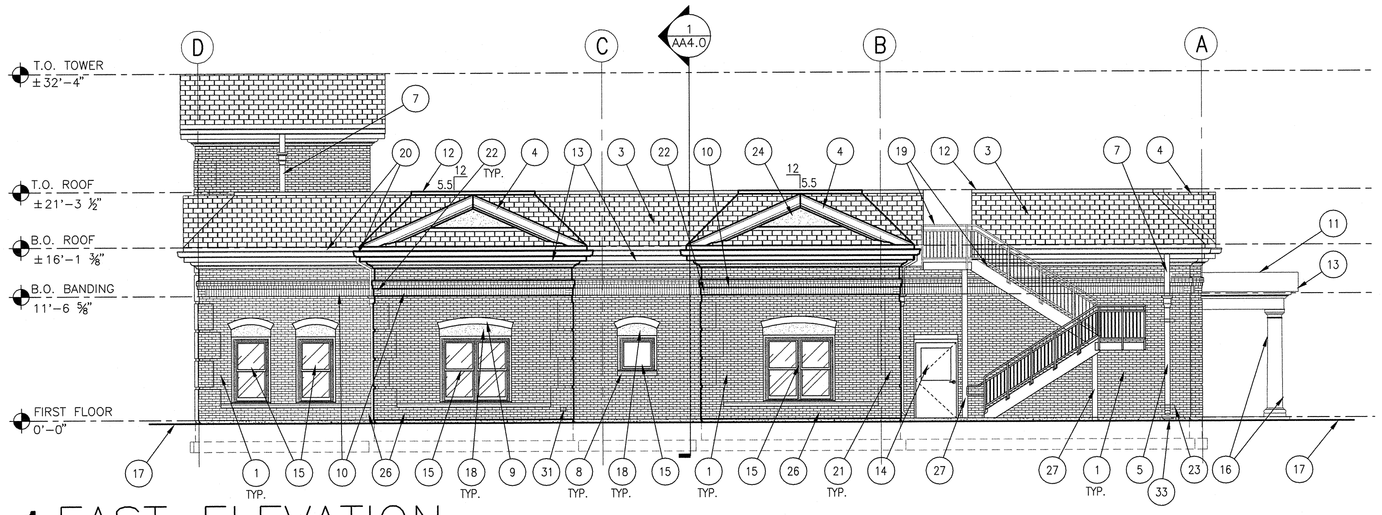

1 EAST ELEVATION

0' 4' 8' 12' 16' 20' 24'

SCALE: 1/8" = 1'-0"

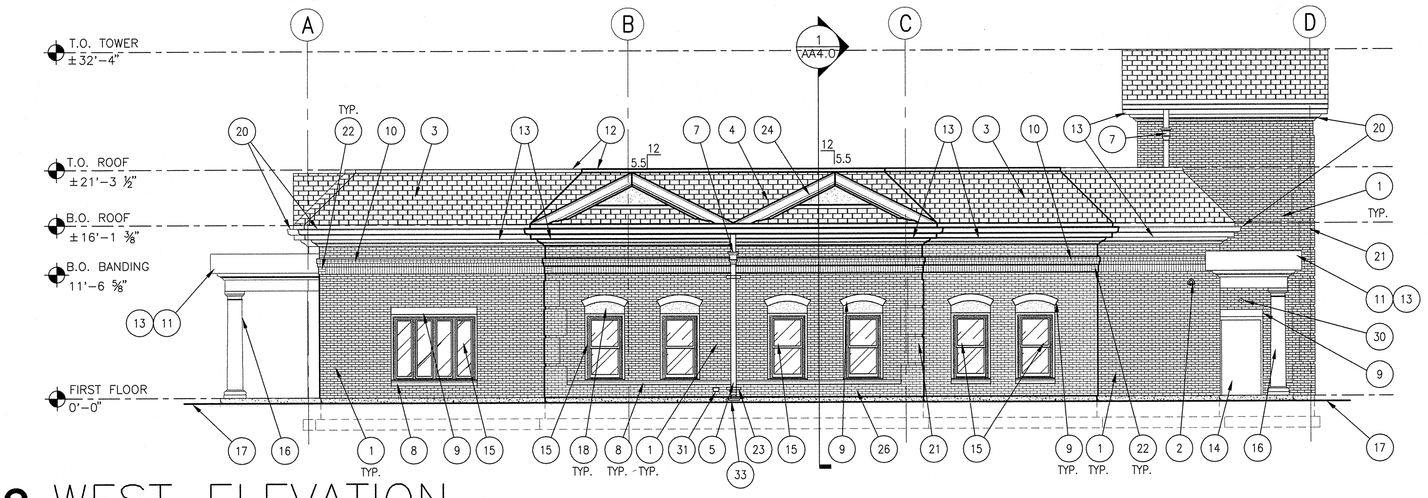

2 WEST ELEVATION

0' 4' 8' 12' 16' 20' 24'

SCALE: 1/8" = 1'-0"

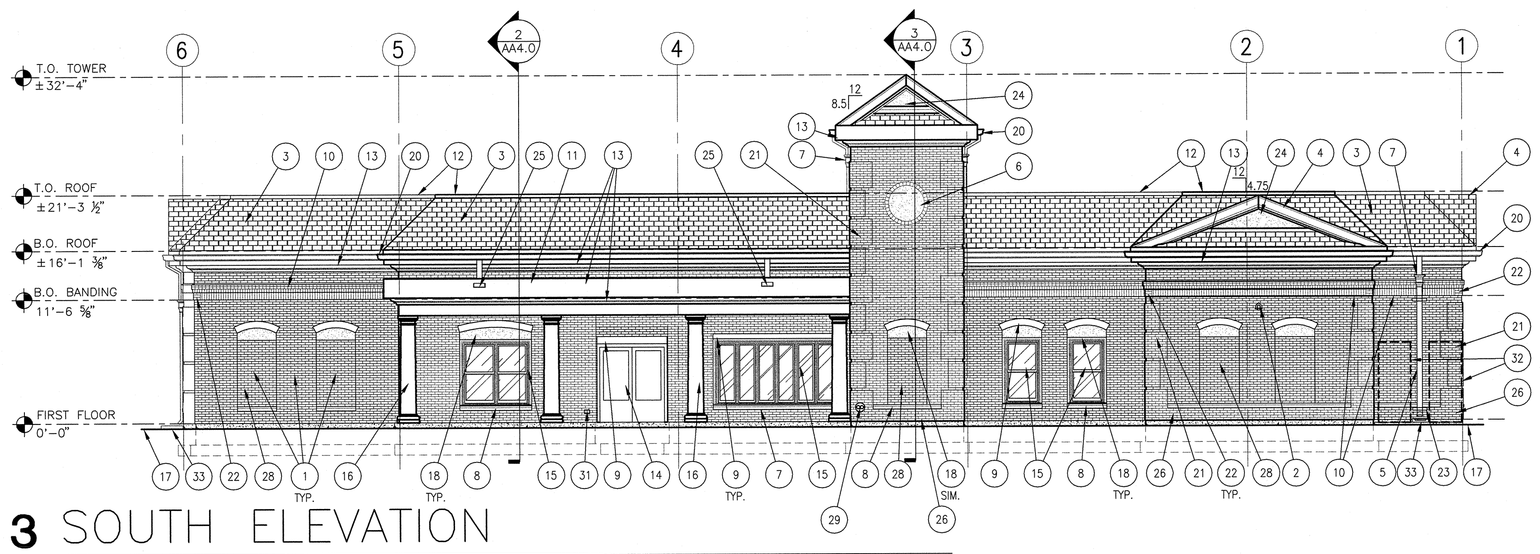

3 SOUTH ELEVATION

0' 4' 8' 12' 16' 20' 24'

SCALE: 1/8" = 1'-0"

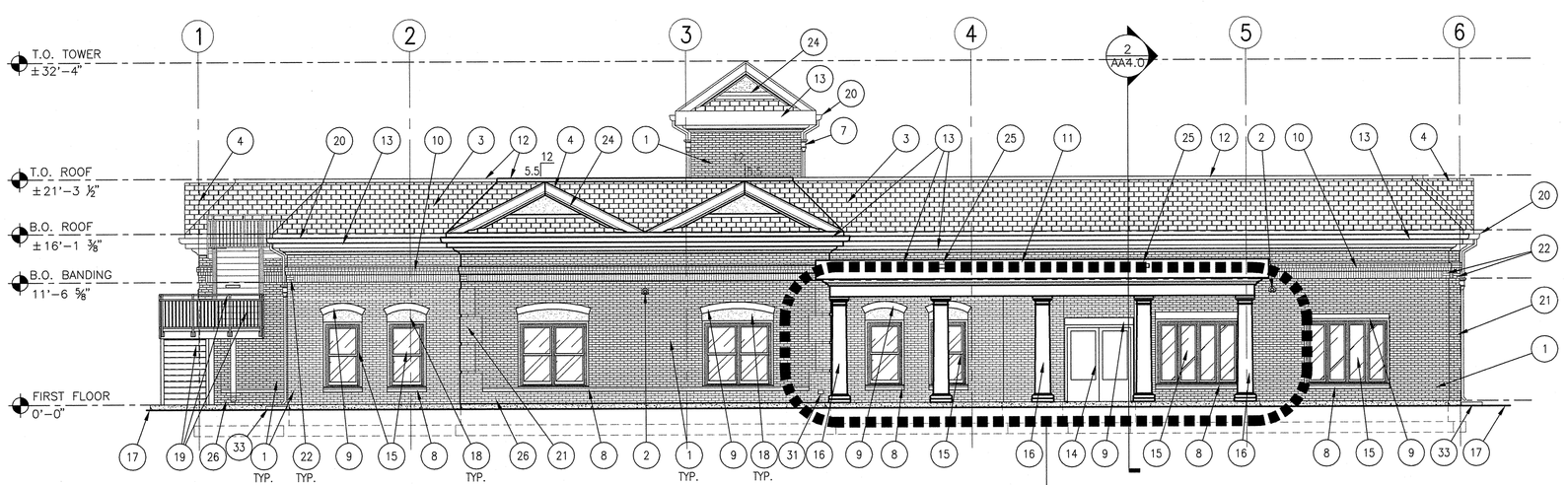

4 NORTH ELEVATION

0' 4' 8' 12' 16' 20' 24'

SCALE: 1/8" = 1'-0"

BID OPTION NO. 2

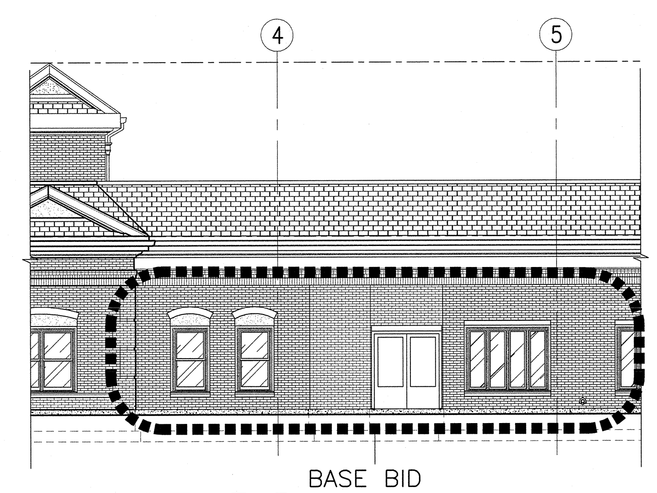

5 BASE BID

0' 4' 8' 12' 16' 20' 24'

SCALE: 1/8" = 1'-0"

GENERAL NOTES:

A. THE REFERENCE ELEVATION MARKED WITH ◆ REPRESENTS VERTICAL HEIGHTS RELATIVE TO INTERIOR FLOOR DATUM ASSUMED AT 0'-0". COORDINATE WITH CIVIL DRAWINGS.

B. COORDINATE EXTERIOR LIGHTING, ELECTRICAL EQUIPMENT, AND FIRE ALARM EQUIPMENT WITH ELECTRICAL DRAWINGS.

C. COORDINATE PLUMBING FIXTURES AND ROOF DRAIN LOCATIONS WITH PLUMBING DRAWINGS.

D. REFER TO AA6.2 FOR DOOR AND WINDOW INFORMATION.

SHEET NOTES:

1. MASONRY VENEER.
2. ROOF OVERFLOW DRAIN FIXTURE.
3. MANSARD ROOF FRAMING ASSEMBLY, WITH ASPHALT SHINGLES. RE: AA7.1–13
4. GABLE ROOF OVERBUILD FRAMING ASSEMBLY, WITH ASPHALT SHINGLES. RE: AA7.4–5.
5. DOWN SPOUT CONNECTED TO RAIN COLLECTOR, RE: AA7.1–12.
6. MEDALLION AT TOWER, RE:AA7.0–6. CENTER AT 20'–2¾" A.F.F.
7. RAINWATER CONDUCTOR. RE:AA7.1–12.
8. CONCRETE SILL.
9. CONCRETE LINTEL. FOR ARCHED LINTEL RE:AA7.4–19.
10. BRICK BANDING, RE: AA7.0–4.
11. CANOPY ROOF ASSEMBLY.
12. PARAPET COPING, RE: AA7.1–14.
13. PRE–FINISHED FASCIA ASSEMBLY.
14. DOOR ASSEMBLY, RE: AA6.2.
15. WINDOW ASSEMBLY, RE: AA6.2.
16. CONCRETE COLUMN ASSEMBLY, RE:AA7.0–8.
17. FINISHED GRADE, CW/ CIVIL DRAWINGS.
18. STUCCO WALL ASSEMBLY RE:AA7.0–18.
19. GALVANIZED STEEL STAIR ASSEMBLY, HANDRAIL, AND GUARDRAIL, RE:AA4.0.
20. GUTTER ASSEMBLY.
21. BRICK QUOIN, RE:AA7.0–3.
22. BRICK BANDING AT OUTSIDE CORNERS. RE:AA7.0–5.
23. DOWNSPOUT SHEET METAL STRAP.
24. STUCCO FINISH.
25. SCUPPER, RE: AA7.1–11.
26. BRICK WAINSCOT, RE: AA7.0–2.
27. GALVANIZED STEEL COLUMN. RE: STRUCTURAL.
28. BRICK INSET PANEL, RE: AA7.0–24(HEAD), AA7.0–23(JAMB), AND AA7.0–22(SILL).
29. FIRE DEPARTMENT CONNECTION.
30. FIRE GONG.
31. HOSE BIBB, CW/PLUMBING.
32. ELECTRICAL DISTRIBUTION BOARDS, COORDINATE WITH ELECTRICAL DRAWINGS.
33. PRECAST CONCRETE SPLASH BLOCK.

Username: bsmith
Dec 02, 2011 – 12:29pm
Q:\2010\10101.0\Arch\02_Drawings\531–319_AA3.0.dwg

REVISIONS	DATE

CSHQA

C.W. MOORE PLAZA
250 S. 5TH ST. BOISE, ID 83702
(208) 343-4635 FAX (208) 343-1858
http://www.cshqa.com

JOHN D. MAULIN, ARCHITECT
C.W. MOORE PLAZA
250 S. 5TH ST
BOISE, IDAHO
PHONE: 208-343-4635 FAX: 208-343-1858

THESE DRAWINGS AND SPECIFICATIONS, AS INSTRUMENTS OF SERVICE, ARE AND SHALL REMAIN THE PROPERTY OF THE ARCHITECT / ENGINEER WHETHER THE PROJECT FOR WHICH THEY ARE MADE IS EXECUTED OR NOT. THESE DRAWINGS AND SPECIFICATIONS SHALL NOT BE USED BY ANY PERSON OR ENTITY ON OTHER PROJECTS, FOR ADDITIONS TO THIS PROJECT, OR COMPLETION OF THIS PROJECT WHEN PHASED WITHOUT THE WRITTEN CONSENT OF CSHQA OR ITS AFFILIATES. Copyright ©2011

STAMP
LICENSED ARCHITECT AR.1708
JOHN D. MAULIN
STATE OF IDAHO
DECEMBER 01, 2011

ORIGINAL DOCUMENT SIGNED BY ARCHITECT ON FILE WITH THE OWNER
ORIGINAL SIGNED BY: JOHN D. MAULIN
ORIGINAL DATE SIGNED: DECEMBER 01, 2011

CAD FILE NAME: 531–319_AA3.0.DWG
XREF FILE NAME: 531–319_xA_30X42TLBK.DWG
531–319_xA_EXT ELEV.DWG

DRAWING TITLE: EXTERIOR ELEVATIONS

PROJECT TITLE: BOISE VAMC NEW EXTENDED CARE UNIT BUILDING 'A' CLC

DATE: 12/01/2011
PROJECT NO. 531–319

APPROVED: CHIEF OF FACILITY MANAGEMENT SERVICE
APPROVED: MEDICAL CENTER DIRECTOR

BUILDING NUMBER: 121
CHECKED: DRD/JDM
DRAWN: BKS
LOCATION: VAMC BOISE, IDAHO

DRAWING NO. AA3.0
DWG 07 OF 58

DEPARTMENT OF VETERANS AFFAIRS

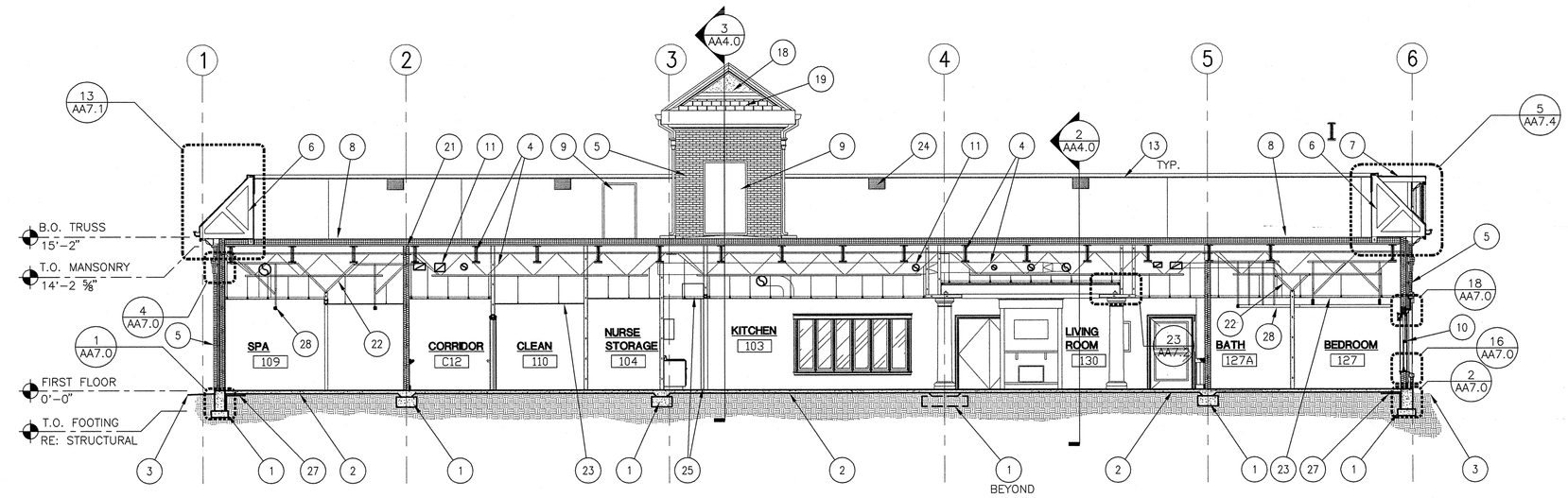

1 BUILDING SECTION

0' 4' 8' 12' 16' 20' 24'

SCALE: 1/8" = 1'-0"

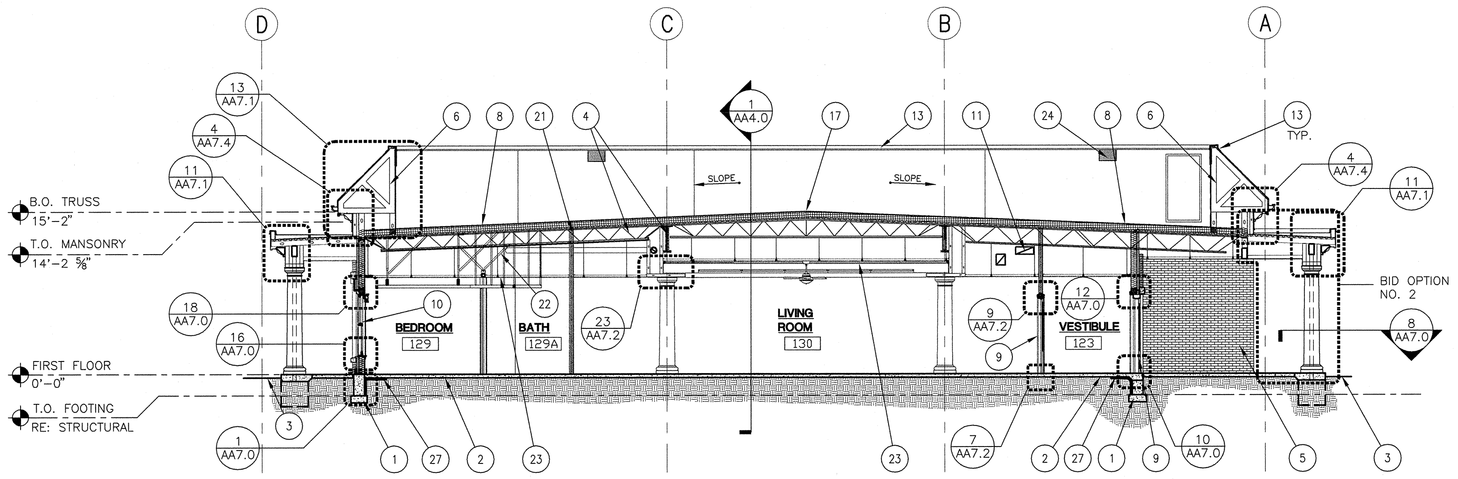

2 BUILDING SECTION

0' 4' 8' 12' 16' 20' 24'

SCALE: 1/8" = 1'-0"

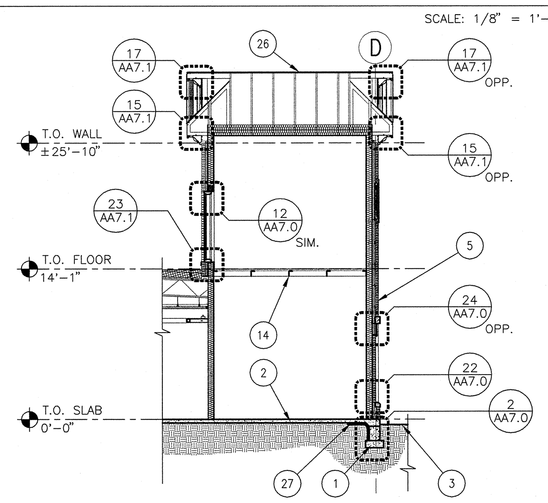

3 BUILDING SECTION

0' 4' 8' 12' 16' 20' 24'

SCALE: 1/8" = 1'-0"

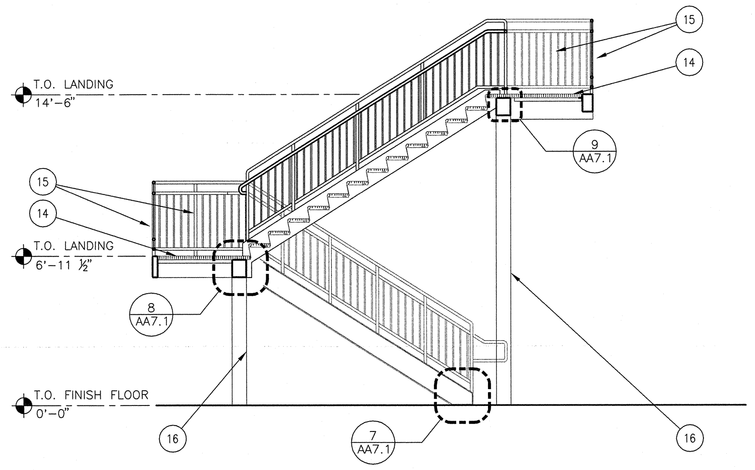

4 STAIR SECTION

0' 2' 4' 6' 8' 10' 12'

SCALE: 1/4" = 1'-0"

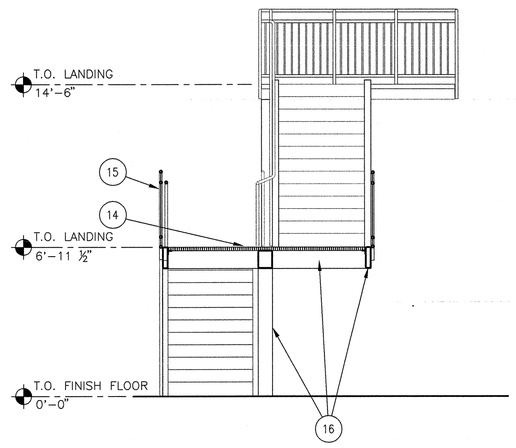

5 STAIR SECTION

0' 2' 4' 6' 8' 10' 12'

SCALE: 1/4" = 1'-0"

GENERAL NOTES:

A. THE REFERENCE ELEVATION MARKED WITH ✠ REPRESENTS VERTICAL HEIGHTS RELATIVE TO INTERIOR FLOOR DATUM ASSUMED AT 0'-0". COORDINATE WITH CIVIL DRAWINGS.

B. COORDINATE EXTERIOR LIGHTING, ELECTRICAL EQUIPMENT, AND FIRE ALARM EQUIPMENT WITH ELECTRICAL DRAWINGS.

C. COORDINATE PLUMBING FIXTURES AND ROOF DRAIN LOCATIONS WITH PLUMBING DRAWINGS.

D. REFER TO AA9.0 FOR REFLECTED CEILING PLAN.

E. REFER TO AA6.2 FOR DOOR AND WINDOW INFORMATION.

F. COORDINATE WITH STRUCTURAL DRAWINGS FOR SIZES AND BEARING HEIGHTS OF STRUCTURAL MEMBERS.

G. COORDINATE WITH CIVIL DRAWINGS FOR PERFORATED FOUNDATION DRAIN PIPING AND BELOW GRADE ROOF DRAIN PIPING.

SHEET NOTES:

1. CONCRETE FOUNDATION SYSTEM, RE: STRUCTURAL DRAWINGS.
2. CONCRETE SLAB ON GRADE AND PREPARED BASED WITH VAPOR BARRIER, RE: STRUCTURAL DRAWINGS.
3. EXTERIOR FINISHED GRADE, RE: CIVIL AND LANDSCAPE DRAWINGS.
4. STRUCTURAL MEMBER, RE: STRUCTURAL DRAWINGS.
5. EXTERIOR WALL ASSEMBLY.
6. MANSARD ROOF FRAMING ASSEMBLY, WITH ASPHALT SHINGLES.
7. GABLE OVERBUILD ROOF FRAMING ASSEMBLY, WITH ASPHALT SHINGLES.
8. SINGLE PLY MEMBRANE ROOFING ASSEMBLY, WHITE IN COLOR.
9. DOOR ASSEMBLY, RE: AA6.2.
10. WINDOW ASSEMBLY, RE: AA6.2.
11. DUCTWORK, RE: MECHANICAL.
12. NO NOTE PROVIDED.
13. PARAPET COPING, RE: AA7.1–14.
14. METAL GRATE FLOORING OVER STRUCTURE, RE: STRUCTURAL DRAWINGS.
15. GALVANIZED GUARDRAIL AND HANDRAIL SYSTEM. RE:AA7.1–4.
16. GALVANIZED STRUCTURE, RE: STRUCTURAL DRAWINGS.
17. RIDGE LINE.
18. STUCCO.
19. ASPHALT SHINGLES.
20. SINGLE PLY MEMBRANE.
21. EXTEND WALL ASSEMBLY TO ROOF DECK TYPICALLY.
22. BRACE TOP OF WALL, RE: AA7.2–18.
23. CEILING ASSEMBLY AS NOTED.
24. FIXED LOUVER/VENT ASSEMBLY.
25. OVERHEAD DOOR ASSEMBLY, RE: AA7.3–22.
26. ROOF ASSEMBLY: ASPHALT SHINGLES OVER 30# FELT, OVER DECK, OVER FRAMING.
27. FOUNDATION INSULATION. RE: AA7.0–1 AND 2.
28. PATIENT LIFT TRACK SYSTEM.

Username: bsmith
Dec 02, 2011 – 12:23pm
Q:\2010\10101.0\Arch\02_Drawings\531-319_AA4.0.dwg

REVISIONS	DATE

CSHQA
C.W. MOORE PLAZA
250 S. 5TH ST. BOISE, ID 83702
(208) 343-4635 FAX (208) 343-1858
http://www.cshqa.com

JOHN D. MAULIN, ARCHITECT
C.W. MOORE PLAZA
250 S. 5TH ST
BOISE, IDAHO
PHONE: 208-343-4635 FAX: 208-343-1858

THESE DRAWINGS AND SPECIFICATIONS, AS INSTRUMENTS OF SERVICE, ARE AND SHALL REMAIN THE PROPERTY OF THE ARCHITECT / ENGINEER WHETHER THE PROJECT FOR WHICH THEY ARE MADE IS EXECUTED OR NOT. THESE DRAWINGS AND SPECIFICATIONS SHALL NOT BE USED BY ANY PERSON OR ENTITY ON OTHER PROJECTS, FOR ADDITIONS TO THIS PROJECT, OR COMPLETION OF THIS PROJECT WHEN PHASED WITHOUT THE WRITTEN CONSENT OF CSHQA OR ITS AFFILIATES. Copyright ©2011

STAMP
LICENSED ARCHITECT AR 1706
JOHN D. MAULIN STATE OF IDAHO
DECEMBER 01, 2011
ORIGINAL DOCUMENT SIGNED BY ARCHITECT ON FILE WITH THE OWNER
ORIGINAL SIGNED BY: JOHN D. MAULIN
ORIGINAL DATE SIGNED: DECEMBER 01, 2011

CAD FILE NAME: 531-319_AA4.0.DWG
XREF FILE NAME: 531-319_xA_30X42TLBK.DWG
531-319_xA_SECTION.DWG

DRAWING TITLE: SECTIONS

APPROVED: CHIEF OF FACILITY MANAGEMENT SERVICE

APPROVED: MEDICAL CENTER DIRECTOR

PROJECT TITLE: BOISE VAMC
NEW EXTENDED CARE UNIT
BUILDING 'A' CLC

BUILDING NUMBER: 121
CHECKED: DRD/JDM
DRAWN: BKS
LOCATION: VAMC BOISE, IDAHO

DATE: 12/01/2011
PROJECT NO. 531-319
DRAWING NO. AA4.0
DWG 08 OF 58

DEPARTMENT OF VETERANS AFFAIRS

Room No.	Room Name	Floor	Base	Walls: East Mtl.	East Finish	South Mtl.	South Finish	West Mtl.	West Finish	North Mtl.	North Finish	Ceilings Mtl.	Ceilings Finish	Remarks
100	MECHANICAL	SC	RB2	GWB	P1	GWB	P1	GWB	P1	GWB	P1	OPEN	P3	
101	VESTIBULE	WOC, CT4	CT6	GWB	P1	GWB	P1	GWB	P1	GWB	P1	GWB	P3	
102	DINING ROOM	SV1, SV2	PWB	GWB	PW, WC1	GWB	PW, WC1	GWB	PW, WC1	-	-	GWB	P3	WC1 ABOVE PW; SOLID MAPLE BASE @ CABINETS; PWB @ ALL OTHER LOCATIONS
103	KITCHEN	SV1	PWB	GWB	P1, CT11	GWB	P1	GWB	P1	GWB	P1, CT11	GWB	P3	SS1 COUNTERTOP & BACKSPLASH; SOLID MAPLE BASE @ CABINETS; PWB @ ALL OTHER LOCATIONS. CT11 ABOVE COUNTERS.
103A	PANTRY	SV1	RB2	GWB	P1	GWB	P1	GWB	P1	GWB	P1	GWB	P3	
104	NURSE STORAGE	SV4	RB2	GWB	P1	GWB	P1	GWB	P1	GWB	P1	SAC1	-	
104A	NURSE CLEAN STORAGE	SV4	RB2	GWB	P1	GWB	P1	GWB	P1	GWB	P1	SAC1	-	
105	S.C. BEDROOM	SV1, SV2	RB1	GWB	P1	GWB	P1	GWB	P1	GWB	P1	GWB, SAC1	P3	RE: AA7.2-6 FOR CEILING/WALL TRANSITION
105A	BATH	CT1, CT2, CT3	CT5	CT	CT7, CT8, CT9, P1	CT	CT7, CT8, CT9, P1	CT	CT7, CT8, CT9, P1	CT	CT7, CT8, CT9, P1	GWB	P3	CT3 SHOWER FLOOR, CT7 SHOWER WALL; P1 ABOVE TILE WAINSCOT IN TOILET
106	PHARMACY	SV4	SVC	GWB	P1	GWB	P1	GWB	P1	GWB	P1	SAC1	-	
107	BEDROOM	SV1, SV2	RB1	GWB	P1	GWB	P1	GWB	P1	GWB	P1	GWB, SAC1	P3	RE: AA7.2-6 FOR CEILING/WALL TRANSITION
107A	BATH	CT1, CT2, CT3	CT5	CT	CT7, CT8, CT9, P1	CT	CT7, CT8, CT9, P1	CT	CT7, CT8, CT9, P1	CT	CT7, CT8, CT9, P1	GWB	P3	CT3 SHOWER FLOOR, CT7 SHOWER WALL; P1 ABOVE TILE WAINSCOT IN TOILET
108	BEDROOM	SV1, SV2	RB1	GWB	P1	GWB	P1	GWB	P1	GWB	P1	GWB, SAC1	P3	RE: AA7.2-6 FOR CEILING/WALL TRANSITION
108A	BATH	CT1, CT2, CT3	CT5	CT	CT7, CT8, CT9, P1	CT	CT7, CT8, CT9, P1	CT	CT7, CT8, CT9, P1	CT	CT7, CT8, CT9, P1	GWB	P3	CT3 SHOWER FLOOR, CT7 SHOWER WALL; P1 ABOVE TILE WAINSCOT IN TOILET
109	SPA	CT3	CT5	CT	CT7, CT10, P1	CT	CT7, CT10, P1	CT	CT7, CT10, P1	CT	CT7, CT10, P1	GWB	P3	CT10 WALL ACCENT BAND
110	CLEAN	SV4	SVC	GWB	P1	GWB	P1	GWB	P1	GWB	P1	SAC1	-	EPOXY PAINT WALLS
111	SOILED	SV4	SVC	GWB	P1	GWB	P1	GWB	P1	GWB	P1	SAC1	-	EPOXY PAINT WALLS
112	HAC	SV4	SVC	GWB	P1	GWB	P1	GWB	P1, FRP	GWB	P1, FRP	SAC1	-	EPOXY PAINT WALLS
113	BEDROOM	SV1, SV2	RB1	GWB	P1	GWB	P1	GWB	P1	GWB	P1	GWB, SAC1	P3	RE: AA7.2-6 FOR CEILING/WALL TRANSITION
113A	BATH	CT1, CT2, CT3	CT5	CT	CT7, CT8, CT9, P1	CT	CT7, CT8, CT9, P1	CT	CT7, CT8, CT9, P1	CT	CT7, CT8, CT9, P1	GWB	P3	CT3 SHOWER FLOOR, CT7 SHOWER WALL; P1 ABOVE TILE WAINSCOT IN TOILET
114	VESTIBULE	WOC, CT4	CT6	GWB	P1	GWB	P1	GWB	P1	GWB	P1	GWB	P3	
115	BEDROOM	SV1, SV2	RB1	GWB	P1	GWB	P1	GWB	P1	GWB	P1	GWB, SAC1	P3	RE: AA7.2-6 FOR CEILING/WALL TRANSITION
115A	BATH	CT1, CT2, CT3	CT5	CT	CT7, CT8, CT9, P1	CT	CT7, CT8, CT9, P1	CT	CT7, CT8, CT9, P1	CT	CT7, CT8, CT9, P1	GWB	P3	CT3 SHOWER FLOOR, CT7 SHOWER WALL; P1 ABOVE TILE WAINSCOT IN TOILET
116	BEDROOM	SV1, SV2	RB1	GWB	P1	GWB	P1	GWB	P1	GWB	P1	GWB, SAC1	P3	RE: AA7.2-6 FOR CEILING/WALL TRANSITION
116A	BATH	CT1, CT2, CT3	CT5	CT	CT7, CT8, CT9, P1	CT	CT7, CT8, CT9, P1	CT	CT7, CT8, CT9, P1	CT	CT7, CT8, CT9, P1	GWB	P3	CT3 SHOWER FLOOR, CT7 SHOWER WALL; P1 ABOVE TILE WAINSCOT IN TOILET
117	LAUNDRY	SV1	RB2	GWB	P1	GWB	P1	GWB	P1	GWB	P1	SAC1	-	
118	STAFF TOILET	CT1	CT5	CT	CT7, CT8, CT9, P1	CT	CT7, CT8, CT9, P1	GWB	P1	CT	CT7, CT8, CT9, P1	SAC1	-	P1 ABOVE TILE. EPOXY PAINT WALLS
119	BEDROOM	SV1, SV2	RB1	GWB	P1	GWB	P1	GWB	P1	GWB	P1	GWB, SAC1	P3	RE: AA7.2-6 FOR CEILING/WALL TRANSITION
119A	BATH	CT1, CT2, CT3	CT5	CT	CT7, CT8, CT9, P1	CT	CT7, CT8, CT9, P1	CT	CT7, CT8, CT9, P1	CT	CT7, CT8, CT9, P1	GWB	P3	CT3 SHOWER FLOOR, CT7 SHOWER WALL; P1 ABOVE TILE WAINSCOT IN TOILET
120	HOME OFFICE	CPT1	RB1	GWB	P1	GWB	P1	GWB	P1	GWB	P1	SAC1	-	
121	BEDROOM	SV1, SV2	RB1	GWB	P1	GWB	P1	GWB	P1	GWB	P1	GWB, SAC1	P3	RE: AA7.2-6 FOR CEILING/WALL TRANSITION
121A	BATH	CT1, CT2, CT3	CT5	CT	CT7, CT8, CT9, P1	CT	CT7, CT8, CT9, P1	CT	CT7, CT8, CT9, P1	CT	CT7, CT8, CT9, P1	GWB	P3	CT3 SHOWER FLOOR, CT7 SHOWER WALL; P1 ABOVE TILE WAINSCOT IN TOILET
122	PUBLIC TOILET	CT1, CT2	CT5	CT	CT7, CT8, CT9, P1	GWB	P1	CT	CT7, CT8, CT9, P1	CT	CT7, CT8, CT9, P1	GWB	P3	P1 ABOVE TILE, CT2 12" PERIMETER FLOOR BORDER. TYP. EPOXY PAINT WALLS.
123	VESTIBULE	WOC, CT4	CT6	GWB	P1	GWB	P1	GWB	P1	GWB	P1	GWB	P3	
124	DEN	CPT1	RB1	GWB	WC2	GWB	WC2	GWB	WC2	GWB	WC2	GWB	P3	
125	HOME GYM	SR1	RB2	GWB	P1	GWB	P1	GWB	P1	GWB	P1	SAC1	-	
126	BEDROOM	SV1, SV2	RB1	GWB	P1	GWB	P1	GWB	P1	GWB	P1	GWB, SAC1	P3	RE: AA7.2-6 FOR CEILING/WALL TRANSITION
126A	BATH	CT1, CT2, CT3	CT5	CT	CT7, CT8, CT9, P1	CT	CT7, CT8, CT9, P1	CT	CT7, CT8, CT9, P1	CT	CT7, CT8, CT9, P1	GWB	P3	CT3 SHOWER FLOOR, CT7 SHOWER WALL; P1 ABOVE TILE WAINSCOT IN TOILET
127	BEDROOM	SV1, SV2	RB1	GWB	P1	GWB	P1	GWB	P1	GWB	P1	GWB, SAC1	P3	RE: AA7.2-6 FOR CEILING/WALL TRANSITION
127A	BATH	CT1, CT2, CT3	CT5	CT	CT7, CT8, CT9, P1	CT	CT7, CT8, CT9, P1	CT	CT7, CT8, CT9, P1	CT	CT7, CT8, CT9, P1	GWB	P3	CT3 SHOWER FLOOR, CT7 SHOWER WALL; P1 ABOVE TILE WAINSCOT IN TOILET
128	BEDROOM	SV1, SV2	RB1	GWB	P1	GWB	P1	GWB	P1	GWB	P1	GWB, SAC1	P3	RE: AA7.2-6 FOR CEILING/WALL TRANSITION
128A	BATH	CT1, CT2, CT3	CT5	CT	CT7, CT8, CT9, P1	CT	CT7, CT8, CT9, P1	CT	CT7, CT8, CT9, P1	CT	CT7, CT8, CT9, P1	GWB	P3	CT3 SHOWER FLOOR, CT7 SHOWER WALL; P1 ABOVE TILE WAINSCOT IN TOILET
129	BEDROOM	SV1, SV2	RB1	GWB	P1	GWB	P1	GWB	P1	GWB	P1	GWB, SAC1	P3	RE: AA7.2-6 FOR CEILING/WALL TRANSITION
129A	BATH	CT1, CT2, CT3	CT5	CT	CT7, CT8, CT9, P1	CT	CT7, CT8, CT9, P1	CT	CT7, CT8, CT9, P1	CT	CT7, CT8, CT9, P1	GWB	P3	CT3 SHOWER FLOOR, CT7 SHOWER WALL; P1 ABOVE TILE WAINSCOT IN TOILET
130	LIVING ROOM	CPT1, SV1	PWB	GWB	PW, WC1	GWB	PW, WC1	GWB	PW, WC1	GWB	PW, WC1	GWB	P3	WC1 ABOVE PW; SOLID MAPLE BASE @ CABINETS; PWB @ ALL OTHER LOCATIONS
C11	CORRIDOR	SV1, SV2, SV3	PWB	GWB	PW, WC1	GWB	PW, WC1	GWB	PW, WC1	GWB	PW, WC1	GWB	P3	WC1 ABOVE PW
C12	CORRIDOR	SV1, SV2, SV3	PWB	GWB	PW, WC1	GWB	PW, WC1	GWB	PW, WC1	GWB	PW, WC1	GWB	P3	WC1 ABOVE PW
C13	CORRIDOR	SV1, SV2, SV3	PWB	GWB	PW, WC1	GWB	PW, WC1	GWB	PW, WC1	GWB	PW, WC1	GWB	P3	WC1 ABOVE PW
C14	CORRIDOR	SV1, SV2, SV3	PWB	GWB	PW, WC1	GWB	PW, WC1	GWB	PW, WC1	GWB	PW, WC1	GWB	P3	WC1 ABOVE PW

1 ROOM FINISH SCHEDULE

SCALE: N.T.S.

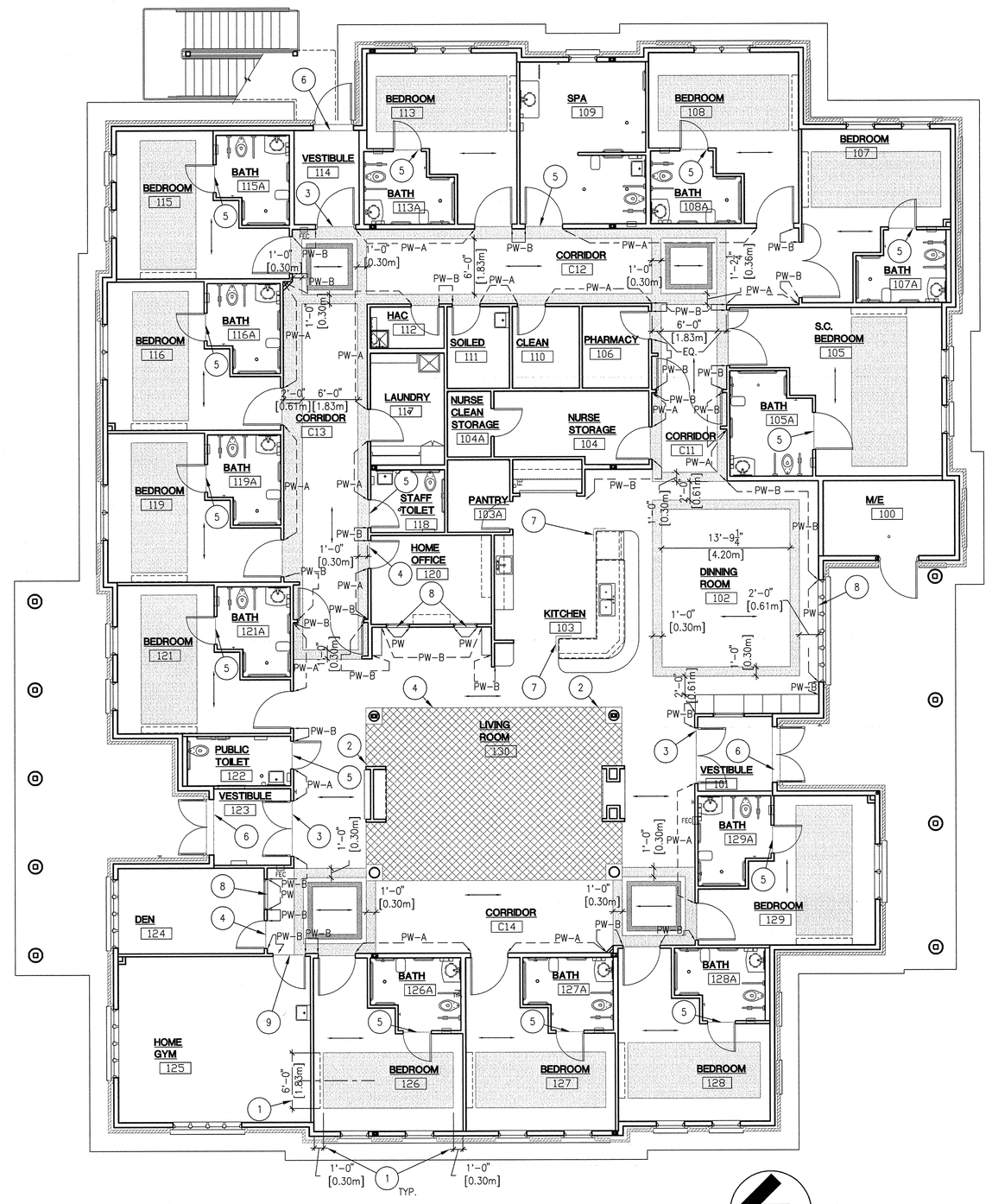

2 FIRST FLOOR FINISH PLAN

0' 4' 8' 12' 16' 20' 24'

SCALE: 1/8" = 1'-0"

LEGEND:

- DIRECTION OF FLOOR WOOD-GRAIN PATTERN.
- LOCATION OF WALL FINISH, RE: FINISH SCHEDULE.
- CPT1 – CARPET RE: FINISH SCHEDULE.
- SV2 – SHEET VINYL (ACCENT), RE: FINISH SCHEDULE.
- SV3 (ACCENT TRIM): TBD.

ENLARGED ACCENT FLOOR PLAN

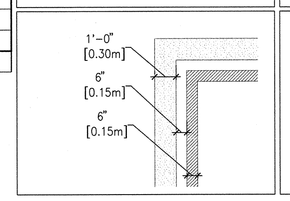

SHEET NOTES:

1. THE DIMENSIONS SHOWN IN BEDROOM 126 FOR FLOORING LAYOUT ARE TYPICAL IN ALL BEDROOMS. SV2 INSET IS 6'-0"(1828.8mm) WIDE AND CENTERED ON HEADWALL. INSET IS 1'-0"(304.8mm) AWAY FROM HEAD WALL AND END WALL. EPOXY ADHESIVE (EX-4000) AT BED LOCATION WHERE INSERT IS IDENTIFIED.
2. CARPET INSET AT LIVING ROOM TO BE ALIGNED WITH THE OUTSIDE EDGE OF COLUMN BASE.
3. FLOORING TRANSITION, CERAMIC TILE TO VINYL FLOORING: SCHLUTER RENO-U, ITEM NO. AEU80 (5/16"7.9375mm THICK TILE). INSTALL TILE FLUSH WITH TOP OF METAL TRANSITION. RE: AA7.2-7.
4. FLOORING TRANSITION, VINYL FLOORING TO CARPET: JOHNSONITE ADAPTOR, CTA-167-A, 1/4" (6.35mm) TO 1/8" 3.175mm MATERIAL.
5. MARBLE THRESHOLD, 3" (76.2mm) WIDE MARBLE SADDLE, COLOR: WHITE, STANDARD BEVEL, RE: AA7.4-12.
6. FLOOR FINISH FLUSH WITH THRESHOLD AT EXTERIOR ENTRY, RE: DOOR SCHEDULE.
7. CORNER GUARD.
8. PREFINISHED PANEL SYSTEM TO UNDERSIDE OF SILL; NO HANDRAIL OR CAP.
9. FLOORING TRANSITION: RUBBER TO VINYL; FINISHED FLOOR SURFACES TO BE FLUSH.

BID OPTIONS

1. BID OPTION NO.4: MODIFY INTERIOR FINISHES FOR BUILDING 'A' AS NOTED:
   A. BASE BID: NO PREFINISHED PANEL SYSTEM (PW); INSTALL RUBBER BASE (RB1) AND VINYL WALLCOVERING (WC1) BELOW HANDRAIL TRIM RE: AA7.4-6.
   B. BID OPTION REMOVE VINYL WALLCOVERING (WC1) AND RUBBER BASE BELOW; ADD PREFINISHED PANEL SYSTEM (PW) AND (PWB); ADD VINYL WALLCOVERING (WC1) ABOVE HANDRAIL TRIM. RE: AA7.4-9.
2. BID OPTION NO.9: BASE BID DOES NOT INCLUDE INTERIOR WINDOW TREATMENTS. ADD TO THE SCOPE OF WORK THE COST TO FURNISH AND INSTALL WINDOW TREATMENS AS SHOWN IN CONTRACT DOCUMENTS.

GENERAL NOTES:

A. SEALED CONCRETE FLOORS SHALL BE PROTECTED TO BE FREE OF ALL STAINS, INCLUDING PAINT, GROUT, AND DRYWALL COMPOUND DURING CONSTRUCTION.
B. REFER TO INTERIOR AND EXTERIOR ELEVATIONS AND REFLECTED CEILING PLANS FOR ADDITIONAL FINISH REQUIREMENTS NOT INDICATED IN SCHEDULE AND FLOOR FINISH PLAN.
C. PROVIDE APPROPIATE ABA COMPLIANT FLOOR TRANSITIONS BETWEEN DISSIMILAR FLOOR MATERIALS AS REQUIRED.
D. REFER TO STRUCTURAL DRAWINGS FOR CONTROL JOINTS.
E. ALL GYPSUM BOARD CEILINGS TO BE PAINTED P3 UNLESS NOTED OTHERWISE.
F. ALL INTERIOR HOLLOW METAL FRAMES AND HOLLOW METAL DOOR FRAME UNITS TO BE PAINTED P2 UNLESS NOTED OTHERWISE.
G. PROVIDE STAINLESS STEEL FILLER BEHIND ANY MIRRORS AND OTHER WALL MOUNTED ACCESSORIES WHEN ITEM IS INSTALLED PARTIALLY OVER CERAMIC TILE.
H. FLOOR FINISHES ARE CONTINUOUS IN THE ENTIRE AREA IN WHICH THEY ARE DESIGNATED. CONTINUE BENEATH EQUIPMENT, MOVEABLE CASEWORK, AND INTO TOE KICK/KNEE SPACES.
J. SOLID MAPLE BASE AT CABINETS TO BE PAINTED. STAINED TO MATCH CABINETS.
K. RE: AA8.1-16 FOR ECO-RESIN PANEL COVER OVER NURSE CALL LAMP MODULES.

FINISH LEGEND:

CARPET

WALK OF CARPET (WOC)
MANUFACTURER: CONEXUS
PATTERN: SUPER NOP
COLOR: #52 AUTUMN
WIDTH: 6'-7"(2006.6mm)

CARPET 1 (CPT1)
MANUFACTURER: MANNINGTON
PATTERN: SQUAREBERRY
COLOR: 4311 ELM
WIDTH: 12'-0"(3657.6mm)
FIBER: ANTRON LEGACY- TYPE 6.6 NYLON
BACKING: ULTRA BAC RE

SEALED CONCRETE

SC
COLOR: CLEAR, W/LIQUID PENETRATING SEALER

RESILIENT FLOORING

SHEET VINYL (SV1)
MANUFACTURER: TEKNOFLOR
PATTERN: NATURAL WOOD COLLECTION
COLOR: #52209 BEECH NUT
WIDTH: 6'-0"(1828.8mm)

SHEET VINYL SV2 (ACCENT)
MANUFACTURER: TEKNOFLOR
PATTERN: FIRESIDE COLLECTION
COLOR: #31097 MEDIUM WALNUT
WIDTH: 6'-0"(1828.8mm)

SHEET VINYL SV3 (ACCENT TRIM)
MANUFACTURER: TEKNOFLOR
PATTERN: RIBBON TWIST
FIELD COLOR: 52209 BEECH NUT
BORDER (A): 31113 BLACK WALNUT
BORDER BACKGROUND (B AND C): 52209 BEECH NUT
SIZE: 6"(152.4mm) WIDTH; FIELD VERIFY INSET SIZE

SHEET VINYL (SV4)
MANUFACTURER: MANNINGTON
PATTERN: FINE FIELDS
COLOR: 10302 BISQUE
WIDTH: 6'-0"(1828.8mm)

RUBBER FLOORING (SR1)
MANUFACTURER: NORA SYSTEMS
PATTERN: NORA PLAN ENVIRONCARE
COLOR: 2963 SANDBAR WILLOW
WIDTH: ART 1462 .08"(2mm)

CERAMIC TILE

CERAMIC TILE CT1 (BASIC FLOOR TILE)
MANUFACTURER: AMERICAN OLEAN
PATTERN: COSTA REI
COLOR: CR83 ORO MIELE
DIMENSION: 12"X12"X3/8" (304.8mmx304.8mmx9.525mm)
THICK GROUT JOINT: 3/16"(4.7625mm)

CERAMIC TILE CT2 (12"(304.8mm)FLOOR BORDER)
MANUFACTURER: AMERICAN OLEAN
PATTERN: COSTA REI
COLOR: CR82 TERRA MARRONE
DIMENSION: 12"X12"X3/8" THICK (304.8mmx304.8mmx9.525mm)
GROUT JOINT: 3/16"(4.7625mm)

CERAMIC TILE CT3 (SHOWER FLOOR TILE)
MANUFACTURER: AMERICAN OLEAN
PATTERN: UNGLAZED COLOR BODY PORCELAIN CERAMICS
COLOR: A94 WILLOW SPECKLED
DIMENSION: 2"X2"X 1/4" THICK (50.8x50.8x9.525mm)
GROUT JOINT: 1/8 "(3.175mm)

CERAMIC TILE CT4 (12"(304.8mmFLOOR BORDER VESTIBULE)
MANUFACTURER: AMERICAN OLEAN
PATTERN: KENDAL SLATE
COLOR: AMBLEDSIDE BEIGE KS01
DIMENSION: 12"X12"X5/16" THICK (304.8mmx304.8mmx7.937mm)
GROUT JOINT: 3/16"(4.7625mm)

CERAMIC TILE CT7 (BASIC WALL TILE)
MANUFACTURER: AMERICAN OLEAN
PATTERN: COSTA REI
COLOR: CR83 OREO MIEL
DIMENSION: 10"X14"X3/8" THICK (254x355.6x9.525mm)
INSTALLATION: VERTICAL
GROUT JOINT: 3/16"(4.7625mm)

CERAMIC TILE CT8 (ACCENT BORDER WALL TILE)
MANUFACTURER: AMERICAN OLEAN
PATTERN: CARRIAGE HOUSE CH84
COLOR: STRAW/SADDEL/BUCKSIN FLORAL ACCENTS.
DIMENSION: 2"X8"(50.2x203.2mm)

CERAMIC TILE CT9 (TRIM WALL TILE)
MANUFACTURER: AMERICAN OLEAN
PATTERN: COSTA REI BULLNOSE
COLOR: CR83 OREO MIEL
DIMENSION: 2"X6"(50.2x152.4mm)

CERAMIC TILE CT10 (ACCENT WALL TILE – SPA)
MANUFACTURER: CEPAC
PATTERN: LUMINOUS
COLOR: LUM-2 ABALONE
DIMENSION: 12"X12" MESH MOUNT (304.8mmx304.8mm)
CUT DOWN TO 6"X12" (152.4mmx304.8mm)

CERAMIC TILE CT11 (MOSAIC WALL TILE)
MANUFACTURER: AMERICAN OLEAN
PATTERN: COSTA REI
COLOR: CR83 OREO MIEL
DIMENSION: 2"X2"X3/8" THICK (50.2x50.2x9.525mm)
GROUT JOINT: 3/16" (4.7625mm)
NOTE: INSTALL BETWEEN BACKSPLASH AND UNDERSIDE OF UPPER CABINETS AND BEHIND COOK TOP AT LEAST 6" (152.4mm) BELOW SURFACE.

GROUT G1 (TILE GROUT)
MANUFACTURER: LATICRETE
COLOR: #39 MUSHROOM

WALL BASE

RUBBER BASE (RB1)
MANUFACTURER: JOHNSONITE
PATTERN: MILLWORK ATTACHE PROFILE
COLOR: 79 BONE WHITE
HEIGHT: 6"(152.4mm)

RUBBER BASE (RB2)
MANUFACTURER: JOHNSONITE
STYLE: COVE BASE
COLOR: 79 BONE WHITE
HEIGHT: 6"(152.4mm)

CERAMIC TILE (CT5)
MANUFACTURER: AMERICAN OLEAN
STYLE: COSTA REI
COLOR: CR83 ORO MIELE
DIMENSION: 6"X12"(152.4x304.8mm)
S36C9TNB

SVC
SHEET VINYL COVE 6"(152.4mm) HIGH MATCH ADJACENT SV MATERIAL
METAL CAP

PWB
MANUFACTURER: MARLITE
PANEL SYSTEM BASE
COLOR: QUESCENT WHITE 5440-S2

CERAMIC TILE CT6 (COVER BASE – VESTIBULE)
MANUFACTURER: AMERICAN OLEAN
STYLE: KENDAL SLATE
COLOR: AMBLEDSIDE BEIGE KS01
DIMENSION: 6"X12"(152.4mmx304.8mm)
S-36C9T

PAINT

PAINT (P1)
MANUFACTURER: SHERWIN WILLIAMS
COLOR: SW 6142 MACADAMIA
FINISH: SEMI-GLOSS

PAINT P2 (ACCENT AND TRIM)
MANUFACTURER: SHERWIN WILLIAMS
COLOR: SW 6144 DAPPER TAN
FINISH: SEMI-GLOSS

PAINT P3 (CEILING)
MANUFACTURER: SHERWIN WILLIAMS
COLOR: SW 6119 ANTIQUE WHITE
FINISH: SEMI-GLOSS
NOTE: LOCATED @ WINDOW & DOOR CASINGS, WOOD DOORS, WOOD INTERIOR WINDOWS, UNLESS NOTED OTHERWISE.

WALLCOVERING

WALL COVERING (WC1)
MANUFACTURER: TRI-KES, TOWER
PATTERN: CURRENT
COLOR: PRARIE GRASS TR-CU-14
TYPE:II, 30% RECYCLED CONTENT
WIDTH: 54"(1371.6mm)

WALL COVERING (WC2)
MANUFACTURER: TRI-KES, TOWER
PATTERN: CURRENT
COLOR: SANDSTONE TR-CU-11
TYPE:II, 30% RECYCLED CONTENT
WIDTH: 54"(1371.6mm)

PREFINISHED PANEL SYSTEM

PREFINISHED PANEL SYSTEM (PW)
MANUFACTURER: MARLITE
STYLE: WG 470 DOUBLE RABBET
COLOR: FAUX ABSTRACTS, QUESENT WHITE 5440-82
WG477 TOP EDGE
WG-1261 BASE

PREFINISHED PANEL SYSTEM (PW-A): PANEL SYSTEM WITH HANDRAIL, RE: AA7.4-9

PREFINISHED PANEL SYSTEM (PW-B): PANEL SYSTEM WITH MAPLE CAP, RE: AA7.4-9

PLASTIC LAMINATE

PLASTIC LAMINATE PL1 (HORIZONTAL)
MANUFACTURER: FORMICA
COLOR: #7022-58 NATURAL CANVAS

PLASTIC LAMINATE PL2 (VERTICAL)
MANUFACTURER: FORMICA
COLOR: #7738-58 COGNAC MAPLE

SOLID SURFACE

SOLID SURFACE (SS1)
MANUFACTURER: LG VIATERA
COLOR: SOLANO

SOLID SURFACE SS2 (BATH AND WINDOW SILLS)
MANUFACTURER: CORIAN
COLOR: AURORA

SUSPENDED ACOUSTICAL CEILING

SUSPENDED ACOUSTICAL CEILING (SAC1)
MANUFACTURER: ARMSTRONG
PRODUCT: 2767 CORTEGA SECOND LOOK II
SIZE: 24"X48"(609.6mmX1219.2mm)

WINDOW TREATMENT

WINDOW TREATMENT (WDC1)
MANUFACTURER: MECHO SHADE
MODEL: MECHOS ROLLER SHADE
SERIES: 8200 SERIES (3% OPEN)
COLOR: 8202 MUSLIN
RE: AA6.2 WINDOW TYPES

WINDOW TREATMENT WDC2 (BLACK OUT BEDROOMS)
MANUFACTURER: MECHO SHADE
MODEL: BLACK OUT ROLLER SHADE
SERIES: EQUINOX
COLOR: 0116 CHARDONNAY
NOTE: DOUBLE SHADE BRACKET
RE: AA6.2 WINDOW TYPES

PRIVACY CURTAIN

MANUFACTURER: MAYER FABRICS
PATTERN: BUILDING BLOCK
COLOR: FELDSPAR
MESH: WHITE, 22"(558.8mm) HIGH FIRE RATED MESH, HOLES 1/2" (12.7mm) ON DIAGONAL
QUANTITY: 1.5 TIMES

RESIN PANEL

MANUFACTURER: 3FORM (GL4)
PATTERN: BEAR GRASS LITE
COLOR: N/A
GAUGE: 1/4" (6.35mm)
FRONT AND BACK FINISH: PATINA QTY. (2) 48"X120"(1219.2mmx3048mm)PANELS.

SHOWER CURTAIN

MANUFACTURER: HOSPITEL
PRODUCT: CLASSIC STRIPE
COLOR: CAFE
QUANTITY: 1.5 TIMES

FIBERGLASS REINFORCED PANEL

FIBERGLASS REINFORCED PANEL (FRP)
COLOR: ALMOND
HEIGHT: 5'(1524 mm) A.F.F.; BUTT SEAM FIELD JOINTS AND TERMINATE EDGES WITH EXTRUDED ALUMINUM TRIM.

CORNER GUARDS

MANUFACTURER: KOROGARD
STYLE: G200
COLOR: CREAM
DIMENSION: 3" (76.2mm)

HANDRAIL

MANUFACTURER: KOROSEAL
STYLE: KOROGARD H500 HANDRAIL
COVER COLOR: HONEY MAPLE
END AND CORNER CAPS: BLACK
LOCATIONS INDICATED BY: PW-A

REVISIONS | DATE

CSHQA
C.W. MOORE PLAZA
250 S. 5TH ST. BOISE, ID 83702
(208) 343-4635 FAX (208) 343-1858
http://www.cshqa.com

JOHN D. MAULIN, ARCHITECT
C.W. MOORE PLAZA
250 S. 5TH ST
BOISE, IDAHO
PHONE: 208-343-4635 FAX: 208-343-1858

THESE DRAWINGS AND SPECIFICATIONS, AS INSTRUMENTS OF SERVICE, ARE AND SHALL REMAIN THE PROPERTY OF THE ARCHITECT / ENGINEER WHETHER THE PROJECT FOR WHICH THEY ARE MADE IS EXECUTED OR NOT. THESE DRAWINGS AND SPECIFICATIONS SHALL NOT BE USED BY ANY PERSON OR ENTITY ON OTHER PROJECTS, FOR ADDITIONS TO THIS PROJECT, OR COMPLETION OF THIS PROJECT WHEN PHASED WITHOUT THE WRITTEN CONSENT OF CSHQA OR ITS AFFILIATES. Copyright ©2011

STAMP
LICENSED ARCHITECT AR.1706
JOHN D. MAULIN STATE OF IDAHO
DECEMBER 01, 2011
ORIGINAL DOCUMENT SIGNED BY ARCHITECT ON FILE WITH THE OWNER
ORIGINAL SIGNED BY: JOHN D. MAULIN
ORIGINAL DATE SIGNED: DECEMBER 01, 2011

CAD FILE NAME: 531-319_AA6.0.DWG
XREF FILE NAME: 531-319_xA_30X42TLBK.DWG 531-319_xA_BASE1.DWG

DRAWING TITLE: ROOM FINISH SCHEDULE

PROJECT TITLE: BOISE VAMC NEW EXTENDED CARE UNIT BUILDING 'A' CLC

DATE: 12/01/2011
PROJECT NO.: 531-319

APPROVED: CHIEF OF FACILITY MANAGEMENT SERVICE
APPROVED: MEDICAL CENTER DIRECTOR

BUILDING NUMBER: 121
CHECKED: DRD/JDM
DRAWN: NLC
LOCATION: VAMC BOISE, IDAHO

DRAWING NO.: AA6.0
DWG 09 OF 58

DEPARTMENT OF VETERANS AFFAIRS

Username:bsmith
Dec 02, 2011 – 12:29pm
Q:\2010\10101\Arch\02_Drawings\531-319_AA6.0.dwg

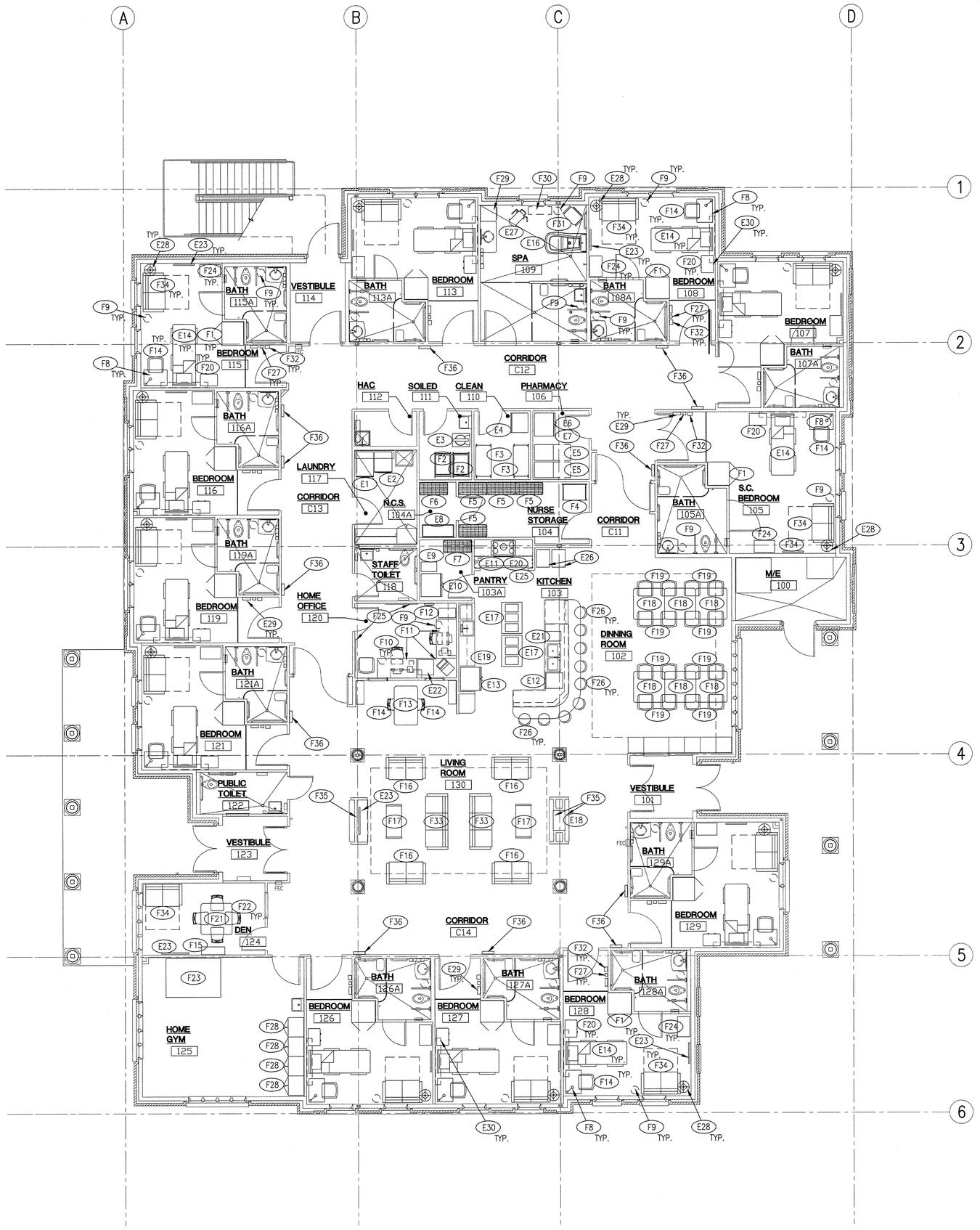

1 FURNITURE AND EQUIPMENT PLAN

0' 4' 8' 12' 16' 20' 24'

SCALE: 1/8" = 1'-0"

EQUIPMENT SCHEDULE

NUMBER	NAME	MANUFACTURER BASIS OF DESIGN	SIZE (WxDxH)	ELECT. 120 VOLTS	ELECT. 208 VOLTS	ELECT. 480 VOLTS	PLUMBING DRAIN	PLUMBING PURIFIED WATER	PLUMBING COLD WATER	PLUMBING HOT WATER	INSTALLATION NEW	INSTALLATION EXISTING	INSTALLATION V.V.	INSTALLATION V.C.	INSTALLATION C.C.	REMARKS
E1	WASHER	WHIRLPOOL	27" x 40" x 38"	O			O		O	O	O		O			Verify plumbing connections
E2	DRYER	WHIRLPOOL	27" x 33" x 38"		O						O		O			
E3	VERNACARE	VERNA CARE 2000	518 mm x 662 mm x 1050 mm	O			O		O		O			O		Verify plumbing connections
E4	LARGE BLANKET WARMER	BLICKMAN	30" x 26 1/2" x 74 1/2"	O							O		O			
E5	ACUDOSE	McKESSON ACUDOSE-RX	24 1/2" x 29" x 57"	O							O		O			
E6	MEDICAL REFRIGERATOR	to be determined	to be determined	O									O			
E7	MEDICAL FREEZER	to be determined	to be determined	O									O			
E8	OMNICELL STORAGE	to be determined	to be determined	O									O			
E9	ICE MAKER	JENN-AIR	15" x 25" x 34"	O			O		O				O			Verify plumbing connections
E10	PANTRY REFRIGERATOR	AMANA	36" x 34" x 70"	O									O			
E11	ELECTRIC OVEN	WHIRLPOOL	30" x 26" x 29"		O								O			
E12	UNDER COUNTER DISHWASHER	HOBART	24" x 27" x 34"		O		O		O	O	O		O			Verify plumbing connections
E13	KITCHEN REFRIGERATOR	AMANA	36" x 34" x 70"	O			O		O		O		O			Ice Maker, Verify plumb. Conn.
E14	PATIENT BED	STRYKER	40" x 94 1/4" x 29"													
E15	PATIENT LIFT SYSTEM	LIKORALL	600 LB. CAPACITY	O							O	O		O		RE: AA9.0 FOR LOCATIONS
E15A	PATIENT LIFT SYSTEM HEAVY DUTY	LIKORALL	1,000 LB. CAPACITY	O							O			O		RE: AA9.0 FOR LOCATIONS
E16	PATIENT BATHTUB	ARJO Century	63 3/8" (1610mm) x 33 1/2" (850 mm)	O			O		O	O				O		Verify plumbing connections
E17	PORTABLE FOOD WARMER	DELFIELD	48 x 31 1/2" x 36"		O						O		O			
E18	ELECTRICAL FIREPLACE	SIMPLIFYRE SFE-ST	30 1/2" x 18" x 26"	O							O				O	Remote control
E19	MICROWAVE OVEN	WHIRLPOOL	22 x 17 1/2" x 13"	O							O		O			
E20	ELECTRIC STOVETOP	KITCHENAID	35 1/2" x 22" x 3 1/4"	O							O		O			
E21	TRASH COMPACTOR	WHIRLPOOL	15" x 24 1/2" x 34 1/4"	O							O		O			
E22	UNDER COUNTER REFRIGERATOR	to be determined	to be determined										O			
E23	FLAT SCREEN TELEVISION / BRACKET	to be determined	to be determined	O									O			Blocking by Contractor
E25	STOVE HOOD	NuTONE WS236WW	36" Wide	O										O		Carbon Filter only, no Duct
E26	ROLLING FOOD CART	CAMBRO	20 1/2" x 27 1/2" x 4'-6"										O			
E27	SEATED SCALE	to be determined											O			
E28	FLOOR LAMP	to be determined												O		
E29	MEDICINE CABINET	CYGNUS, INC.	20"x 23"x 4"											O		
E30	THERMOMETER												O			RE:AA8.0-17

2 EQUIPMENT SCHEDULE

SCALE: N.T.S.

FURNITURE SCHEDULE

FURNITURE NUMBER	NAME	INSTALLATION NEW	INSTALLATION EXISTING	INSTALLATION V.V.	INSTALLATION V.C.	INSTALLATION C.C.	REMARKS
F1	PATIENT CABINET			O			
F2	SOIL LINEN CART			O			
F3	CLEAN LINEN CART			O			
F4	CRASH CART			O			
F5	N.S. METAL SHELVES			O			
F6	N.C.S. METAL SHELVES			O			
F7	PANTRY METAL SHELVES			O			
F8	WRITING DESK W/LAMP			O			
F9	TRASH RECEPTACLE			O			
F10	OFFICE CHAIR			O			
F11	DESK			O			
F12	FILE CABINET			O			
F13	STUDY TABLE			O			
F14	STUDY CHAIR			O			
F15	BOOKSHELF			O			
F16	LOVE SEAT			O			
F17	COFFEE TABLE			O			
F18	DINNING ROOM TABLE			O			
F19	DINNING ROOM CHAIR			O			
F20	NIGHT STAND			O			
F21	DEN TABLE			O			
F22	DEN CHAIR			O			
F23	HOME GYM TABLE			O			
F24	DRESSER			O			
F25	WHITEBOARD			O			
F26	BAR STOOL			O			
F27	HAND SANITIZER DISPENSER			O			
F28	HOME GYM STORAGE CABINET			O			
F29	SPA WARDROBE W/ MIRROR ON DOOR			O			
F30	CONSOLE TABLE			O			
F31	TRANSFER CHAIR			O			
F32	SHARPS DISPOSAL/ GLOVE DISPENSER			O			
F33	COUCH			O			
F34	LOVE SEAT/ FOLD OUT BED			O			
F35	ARTWORK			O			
F36	MEMORY DISPLAY BOX			O			

3 FURNITURE SCHEDULE

SCALE: N.T.S.

LEGEND:

N.S.	NURSE STORAGE
N.C.S	NURSE CLEAN STORAGE
V.V.	VETERANS AFFAIRS FURNISHED, VETERANS AFFAIRS INSTALLED
V.C.	VETERANS AFFAIRS FURNISHED, CONTRACTOR INSTALLED
C.C.	CONTRACTOR FURNISHED, CONTRACTOR INSTALLED

REVISIONS | DATE

CSHQA

C.W. MOORE PLAZA
250 S. 5TH ST. BOISE, ID 83702
(208) 343-4635 FAX (208) 343-1858
http://www.cshqa.com

JOHN D. MAULIN, ARCHITECT
C.W. MOORE PLAZA
250 S. 5TH ST
BOISE, IDAHO
PHONE: 208-343-4635 FAX: 208-343-1858

THESE DRAWINGS AND SPECIFICATIONS, AS INSTRUMENTS OF SERVICE, ARE AND SHALL REMAIN THE PROPERTY OF THE ARCHITECT / ENGINEER WHETHER THE PROJECT FOR WHICH THEY ARE MADE IS EXECUTED OR NOT. THE DRAWINGS AND SPECIFICATIONS SHALL NOT BE USED BY ANY PERSON OR ENTITY ON OTHER PROJECTS, FOR ADDITIONS TO THIS PROJECT, OR COMPLETION OF THIS PROJECT WHEN PHASED WITHOUT THE WRITTEN CONSENT OF CSHQA OR ITS AFFILIATES. Copyright ©2011

STAMP
LICENSED ARCHITECT AR.1706
JOHN D. MAULIN STATE OF IDAHO
DECEMBER 01, 2011
ORIGINAL DOCUMENT SIGNED BY ARCHITECT ON FILE WITH THE OWNER
ORIGINAL SIGNED BY: JOHN D. MAULIN
ORIGINAL DATE SIGNED: DECEMBER 01, 2011

CAD FILE NAME: 531-319_AA6.1.DWG
XREF FILE NAME: 531-319_xA_30X42TLBK.DWG
531-319_xA_BASE1.DWG

DRAWING TITLE: FURNITURE AND EQUIPMENT PLAN / SCHEDULES

APPROVED: CHIEF OF FACILITY MANAGEMENT SERVICE

APPROVED: MEDICAL CENTER DIRECTOR

PROJECT TITLE: BOISE VAMC NEW EXTENDED CARE UNIT BUILDING 'A' CLC

BUILDING NUMBER: 121 | CHECKED: DRD/JDM | DRAWN: BKS

LOCATION: VAMC BOISE, IDAHO

DATE: 12/01/2011
PROJECT NO. 531-319
DRAWING NO. AA6.1
DWG 10 OF 58

DEPARTMENT OF VETERANS AFFAIRS

Username: bsmith
Dec 02, 2011 - 12:30pm
Q:\2010\0101.0\Arch\02_Drawings\531-319_AA6.1.dwg

DOOR SCHEDULE

DOOR NUMBER	ROOM NAME	DOOR TYPE	DOOR SIZE WIDTH	DOOR SIZE HEIGHT	DOOR THICKNESS	DOOR MATERIAL	DOOR GLAZING	DOOR FINISH / FACING	FRAME TYPE	FRAME MATERIAL	FRAME FINISH	FIRE RATING	HARDWARE GROUP	DETAILS THRESHOLD	DETAILS JAMB	DETAILS HEAD	DOOR REMARKS
100	MECHANICAL/ELECTRICAL	D1	4'-0" (1219.2MM)	7'-0" (2133.6MM)	13/4"(44.5)	HM	-	PT	F1	HM	PT	-	8	AA7.0-13	AA7.0-14	AA7.0-12	
101	VESTIBULE	PAIR D2	3'-0" (914.4MM)	7'-0" (2133.6MM)	21/4"(57.2)	AL/WD	GL1	FF/ST	F1	HM	PT	-	12	AA7.0-10	AA7.0-11	AA7.0-12	2,7,8,11,12
101A	VESTIBULE	PAIR D2	3'-0" (914.4MM)	7'-0" (2133.6MM)	21/4"(57.2)	WD	GL2	ST	F1	HM	PT	-	7	-	AA7.2-8	AA7.2-9	6,7,8,11,12
103	KITCHEN	D7	6'-0" (1828.8MM)	7'-0" (2133.6MM)	5/8"(15.8)	SS	-	FF	-	ST	PT	60 MIN	11	-	AA7.4-21	AA7.3-22	3
103A	PANTRY	D3	3'-0" (914.4MM)	7'-0" (2133.6MM)	13/4"(44.5)	WD	-	PT	F1	HM	PT	-	15	-	AA7.2-8	AA7.2-9	9
104	NURSE STORAGE	D3	3'-6" (1066.8MM)	7'-0" (2133.6MM)	13/4"(44.5)	WD	-	PT	F1	HM	PT	-	22	-	AA7.2-8	AA7.2-9	9, 11
104A	NURSE CLEAN STORAGE	D3	3'-0" (914.4MM)	7'-0" (2133.6MM)	13/4"(44.5)	WD	-	PT	F1	HM	PT	-	4	-	AA7.2-8	AA7.2-9	10
105	S.C. BEDROOM	D4	6'-0" (1828.8MM)	7'-0" (2133.6MM)	13/4"(44.5)	WD	-	PT	F1	HM	PT	-	20	-	AA7.2-8	AA7.2-9	
105A	BATH	D3	4'-0" (1219.2MM)	8'-0" (2438.4MM)	13/4"(44.5)	WD	-	PT	F3	HM	PT	-	17	-	AA7.2-8	-	4, 7
106	PHARMACY	D3	3'-6" (1066.8MM)	7'-0" (2133.6MM)	13/4"(44.5)	WD	-	PT	F1	HM	PT	-	22	-	AA7.2-8	AA7.2-9	9, 11
107	BEDROOM	D4	6'-0" (1219.2MM)	7'-0" (2133.6MM)	13/4"(44.5)	WD	-	PT	F1	HM	PT	-	20	-	AA7.2-8	AA7.2-9	
107A	BATH	D3	3'-0" (1219.2MM)	8'-0" (2438.4MM)	13/4"(44.5)	WD	-	PT	F3	HM	PT	-	17	-	AA7.2-8	-	4, 7
108	BEDROOM	D3	4'-0" (1219.2MM)	7'-0" (2133.6MM)	13/4"(44.5)	WD	-	PT	F1	HM	PT	-	14	-	AA7.2-8	AA7.2-9	
108A	BATH	D3	3'-0" (1219.2MM)	8'-0" (2438.4MM)	13/4"(44.5)	WD	-	PT	F3	HM	PT	-	17	-	AA7.2-8	-	4, 7
109	SPA	D3	4'-0" (1219.2MM)	7'-0" (2133.6MM)	13/4"(44.5)	WD	-	PT	F1	HM	PT	-	1	-	AA7.2-8	AA7.2-9	7
110	CLEAN	D3	3'-0" (914.4MM)	7'-0" (2133.6MM)	13/4"(44.5)	WD	-	PT	F1	HM	PT	-	23	-	AA7.2-8	AA7.2-9	9, 11
111	SOILED	D3	3'-0" (914.4MM)	7'-0" (2133.6MM)	13/4"(44.5)	WD	-	PT	F1	HM	PT	45 MIN	21	-	AA7.2-8	AA7.2-9	9, 11
112	HAC	D3	3'-0" (914.4MM)	7'-0" (2133.6MM)	13/4"(44.5)	WD	-	PT	F1	HM	PT	-	5	-	AA7.2-8	AA7.2-9	9
113	BEDROOM	D3	4'-0" (1219.2MM)	7'-0" (2133.6MM)	13/4"(44.5)	WD	-	PT	F1	HM	PT	-	14	-	AA7.2-8	AA7.2-9	
113A	BATH	D3	3'-0" (1219.2MM)	8'-0" (2438.4MM)	13/4"(44.5)	WD	-	PT	F3	HM	PT	-	17	-	AA7.2-8	-	4, 7
114	VESTIBULE	D5	4'-0" (1219.2MM)	7'-0" (2133.6MM)	13/4"(44.5)	HM	GL1	PT	F1	HM	PT	-	10	AA7.0-10	AA7.0-11	AA7.0-12	7, 11
114A	VESTIBULE	D2	4'-0" (1219.2MM)	7'-0" (2133.6MM)	21/4"(57.2)	WD	GL2	ST	F1	HM	PT	-	15	-	AA7.2-8	AA7.2-9	6, 7, 11
115	BEDROOM	D3	4'-0" (1219.2MM)	7'-0" (2133.6MM)	13/4"(44.5)	WD	-	PT	F1	HM	PT	-	14	-	AA7.2-8	AA7.2-9	
115A	BATH	D3	3'-0" (1219.2MM)	8'-0" (2438.4MM)	13/4"(44.5)	WD	-	PT	F3	HM	PT	-	17	-	AA7.2-8	-	4, 7
116	BEDROOM	D3	4'-0" (1219.2MM)	7'-0" (2133.6MM)	13/4"(44.5)	WD	-	PT	F1	HM	PT	-	14	-	AA7.2-8	AA7.2-9	
116A	BATH	D3	3'-0" (1219.2MM)	8'-0" (2438.4MM)	13/4"(44.5)	WD	-	PT	F3	HM	PT	-	17	-	AA7.2-8	-	4, 7
117	LAUNDRY	D3	3'-0" (914.4MM)	7'-0" (2133.6MM)	13/4"(44.5)	WD	-	PT	F1	HM	PT	45 MIN	16	-	AA7.2-8	AA7.2-9	
118	STAFF TOILET	D3	3'-0" (914.4MM)	7'-0" (2133.6MM)	13/4"(44.5)	WD	-	PT	F1	HM	PT	-	1	-	AA7.2-8	AA7.2-9	7
119	BEDROOM	D3	4'-0" (1219.2MM)	7'-0" (2133.6MM)	13/4"(44.5)	WD	-	PT	F1	HM	PT	-	14	-	AA7.2-8	AA7.2-9	
119A	BATH	D3	3'-0" (1219.2MM)	8'-0" (2438.4MM)	13/4"(44.5)	WD	-	PT	F3	HM	PT	-	17	-	AA7.2-8	-	4, 7
120	HOME OFFICE	D6	3'-0" (914.4MM)	7'-0" (2133.6MM)	13/4"(44.5)	WD	GL4	PT	F1	HM	PT	-	2	-	AA7.2-8	AA7.2-9	7
121	BEDROOM	D3	4'-0" (1219.2MM)	7'-0" (2133.6MM)	13/4"(44.5)	WD	-	PT	F1	HM	PT	-	14	-	AA7.2-8	AA7.2-9	
121A	BATH	D3	3'-0" (1219.2MM)	8'-0" (2438.4MM)	13/4"(44.5)	WD	-	PT	F3	HM	PT	-	17	-	AA7.2-8	-	4, 7
122	PUBLIC TOILET	D3	3'-0" (914.4MM)	7'-0" (2133.6MM)	13/4"(44.5)	WD	-	PT	F1	HM	PT	-	18	-	AA7.2-8	AA7.2-9	7
123	VESTIBULE	PAIR D2	3'-0" (914.4MM)	7'-0" (2133.6MM)	21/4"(57.2)	AL/WD	GL1	FF/ST	F1	HM	PT	-	12	AA7.0-10	AA7.0-11	AA7.0-12	2,7,8,11,12
123A	VESTIBULE	PAIR D2	3'-0" (914.4MM)	7'-0" (2133.6MM)	21/4"(57.2)	WD	GL2	ST	F1	HM	PT	-	7	-	AA7.2-8	AA7.2-9	6,7,8,11,12
124	DEN	D6	3'-0" (914.4MM)	7'-0" (2133.6MM)	13/4"(44.5)	WD	GL4	PT	F1	HM	PT	-	19	-	AA7.2-8	AA7.2-9	7
125	HOME GYM	D6	3'-6" (1066.8MM)	7'-0" (2133.6MM)	13/4"(44.5)	WD	GL4	PT	F1	HM	PT	-	3	-	AA7.2-8	AA7.2-9	7
126	BEDROOM	D3	4'-0" (1219.2MM)	7'-0" (2133.6MM)	13/4"(44.5)	WD	-	PT	F1	HM	PT	-	14	-	AA7.2-8	AA7.2-9	
126A	BATH	D3	3'-0" (1219.2MM)	8'-0" (2438.4MM)	13/4"(44.5)	WD	-	PT	F3	HM	PT	-	17	-	AA7.2-8	-	4, 7
127	BEDROOM	D3	4'-0" (1219.2MM)	7'-0" (2133.6MM)	13/4"(44.5)	WD	-	PT	F1	HM	PT	-	14	-	AA7.2-8	AA7.2-9	
127A	BATH	D3	3'-0" (1219.2MM)	8'-0" (2438.4MM)	13/4"(44.5)	WD	-	PT	F3	HM	PT	-	17	-	AA7.2-8	-	4, 7
128	BEDROOM	D3	4'-0" (1219.2MM)	7'-0" (2133.6MM)	13/4"(44.5)	WD	-	PT	F1	HM	PT	-	14	-	AA7.2-8	AA7.2-9	
128A	BATH	D3	3'-0" (1219.2MM)	8'-0" (2438.4MM)	13/4"(44.5)	WD	-	PT	F3	HM	PT	-	17	-	AA7.2-8	-	4, 7
129	BEDROOM	D3	4'-0" (1219.2MM)	7'-0" (2133.6MM)	13/4"(44.5)	WD	-	PT	F1	HM	PT	-	14	-	AA7.2-8	AA7.2-9	
129A	BATH	D3	3'-0" (1219.2MM)	8'-0" (2438.4MM)	13/4"(44.5)	WD	-	PT	F3	HM	PT	-	17	-	AA7.2-8	-	4, 7
C11	CORRIDOR	PAIR D3	3'-6" (1066.8MM)	7'-0" (2133.6MM)	13/4"(44.5)	WD	-	PT	F2	HM	PT	20 MIN	9	-	AA7.2-8	AA7.2-9	1,11,13
C13	CORRIDOR	PAIR D3	3'-6" (1066.8MM)	7'-0" (2133.6MM)	13/4"(44.5)	WD	-	PT	F2	HM	PT	20 MIN	9	-	AA7.2-8	AA7.2-9	1,11,13
200	MECHANICAL ELECTRICAL	D1	3'-0" (1219.2MM)	7'-0" (2133.6MM)	13/4"(44.5)	HM	-	PT	F4	HM	PT	-	8	AA7.1-23	AA7.0-14	AA7.0-12	5
200A	MANSARD ACCESS	D1	3'-0" (1219.2MM)	6'-0" (1828.8MM)	13/4"(44.5)	HM	-	PT	F4	HM	PT	-	24	AA7.4-13	AA7.4-13 SIM	AA7.4-14	5
200B	MANSARD ACCESS	D1	3'-0" (1219.2MM)	6'-0" (1828.8MM)	13/4"(44.5)	HM	-	PT	F4	HM	PT	-	24	AA7.4-13	AA7.4-13 SIM	AA7.4-14	5

GENERAL NOTES:

A. COORDINATE ALL DOORS AND WINDOWS WITH THE FLOOR PLANS AND EXTERIOR ELEVATIONS.
B. FIELD VERIFY ALL DIMENSIONS PRIOR TO FABRICATION.
C. EXTERIOR WINDOW TYPES ARE SHOWN FROM THE OUTSIDE.
D. ALUMINUM CLAD WOOD WINDOWS AND DOORS FINISH TO MATCH MARVIN WINDOWS COCONUT CREAM, UNLESS NOTED OTHERWISE.

DOOR REMARKS

1. SMOKE BARRIER.
2. ALUMINUM CLAD WOOD DOOR.
3. OVERHEAD COILING FIRE DOOR, MANUAL, FUSABLE LINK.
4. HOLLOW METAL FRAME JAMBS TO EXTEND TO CEILING, NO HEAD PROVIDED TO ALLOW PASSAGE OF PATIENT LIFT.
5. FOUR SIDED DOOR FRAME.
6. WOOD DOOR SIMILAR TO NOTE 2 ABOVE, EXCEPT NO ALUMINUM CLADDING.
7. DOOR THRESHOLD, RE: AA6.0.
8. INTERNAL RODS, NOT REQUIRING REMOVABLE MULLIONS.
9. WOOD TRIM ON PUBLIC SIDE ONLY.
10. NO WOOD TRIM EITHER SIDE OF OPENING.
11. PROVIDE ELECTRIFIED HARDWARE, CW/ SPECIFICATIONS AND ELECTRICAL DRAWINGS.
12. AUTOMATIC OPERATOR.
13. MAGNETIC HOLD-OPEN.

GLAZING LEGEND / NOTES

GLAZING UNIT DESIGNATIONS

GL1 1⅙" CLEAR LOW 'E' INSULATED GLAZING UNITS
GL2 ¼" CLEAR GLAZING
GL3 1⅙" INSULATED GLAZING UNITS WITH 'OBSURE' GLAZING
GL4 ⅛" PATTERNED ECO-RESIN PANELS. RE: AA6.0.
GL5 60 MIN. RATED GLAZING

GLAZING GENERAL NOTES

1. ALL EXTERIOR GLAZING TO BE TYPE GL1 UNLESS NOTED OTHERWISE.
2. SAFETY GLASS AT LOCATIONS INDICATED 'T' UNLESS OTHERWISE NOTED.
3. NO SHADE AT WINDOW TYPE W06

WINDOW TYPES

SCALE: 1/4" = 1'-0"

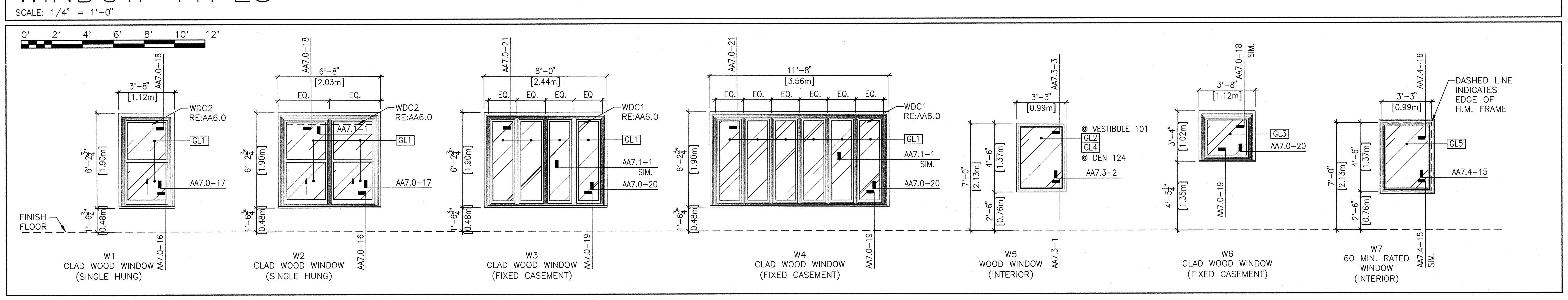

DOOR TYPES

SCALE: 1/4" = 1'-0"

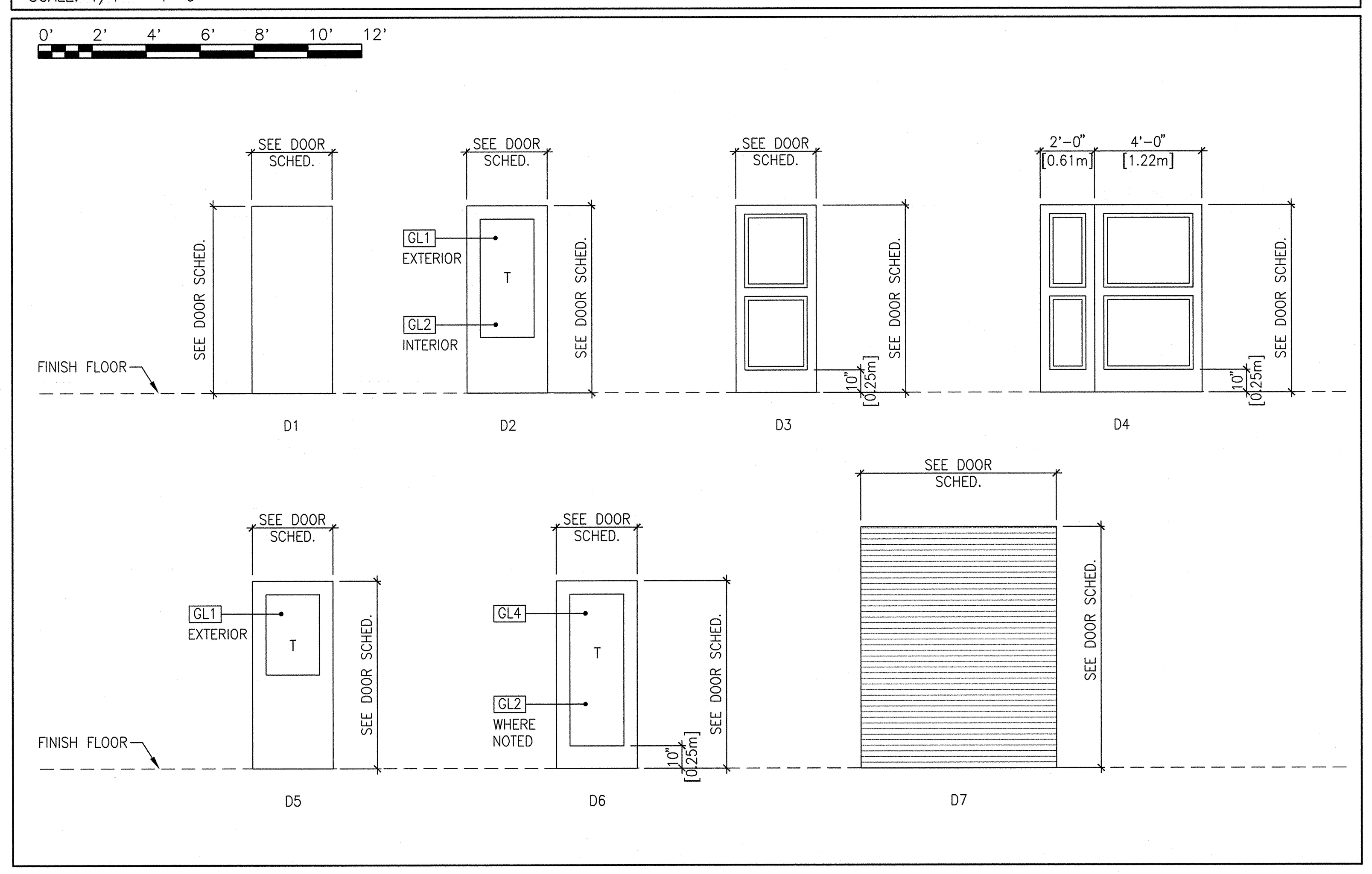

FRAME TYPES

SCALE: 1/4" = 1'-0"

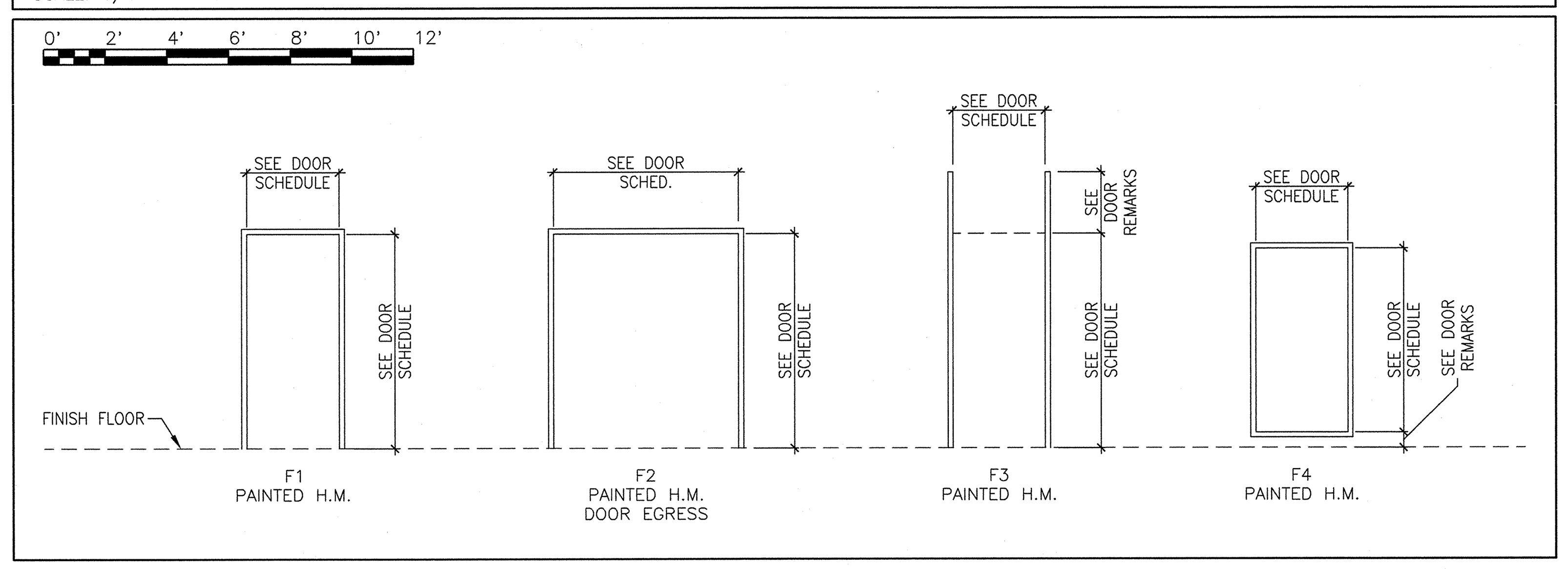

REVISIONS | DATE

CSHQA
C.W. MOORE PLAZA
250 S. 5TH ST. BOISE, ID 83702
(208) 343-4635 FAX (208) 343-1858
http://www.cshqa.com

JOHN D. MAULIN, ARCHITECT
C.W. MOORE PLAZA
250 S. 5TH ST
BOISE, IDAHO
PHONE: 208-343-4635 FAX: 208-343-1858

THESE DRAWINGS AND SPECIFICATIONS, AS INSTRUMENTS OF SERVICE, ARE AND SHALL REMAIN THE PROPERTY OF THE ARCHITECT / ENGINEER WHETHER THE PROJECT FOR WHICH THEY ARE MADE IS EXECUTED OR NOT. THESE DRAWINGS AND SPECIFICATIONS SHALL NOT BE USED BY ANY PERSON OR ENTITY ON OTHER PROJECTS, FOR ADDITIONS TO THIS PROJECT, OR COMPLETION OF THIS PROJECT WHEN PHASED WITHOUT THE WRITTEN CONSENT OF CSHQA OR ITS AFFILIATES. Copyright ©2011

STAMP
LICENSED ARCHITECT AR.1706
JOHN D. MAULIN
STATE OF IDAHO
DECEMBER 01, 2011
ORIGINAL DOCUMENT SIGNED BY ARCHITECT ON FILE WITH THE OWNER
ORIGINAL SIGNED BY: JOHN D. MAULIN
ORIGINAL DATE SIGNED: DECEMBER 01, 2011

CAD FILE NAME: 531-319_AA6.2.DWG
XREF FILE NAME: 531-319_xA_30X42TLBK.DWG

DRAWING TITLE: DOOR SCHEDULE AND WINDOW TYPES
APPROVED: CHIEF OF FACILITY MANAGEMENT SERVICE
APPROVED: MEDICAL CENTER DIRECTOR

PROJECT TITLE: BOISE VAMC NEW EXTENDED CARE UNIT BUILDING 'A' CLC
BUILDING NUMBER: 121 | CHECKED: DRD/JDM | DRAWN: BKS
LOCATION: VAMC BOISE, IDAHO

DATE: 12/01/2011
PROJECT NO. 531-319
DRAWING NO. AA6.2
DWG 11 OF 58

DEPARTMENT OF VETERANS AFFAIRS

Username: bsmith
Dec 02, 2011 - 12:30pm
Q:\2010\10101.0\Arch\02_Drawings\531-319_AA6.2.dwg

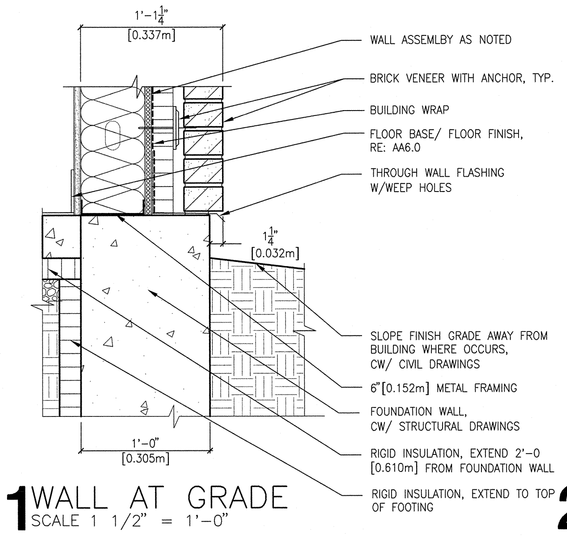

1 WALL AT GRADE
SCALE 1 1/2" = 1'-0"

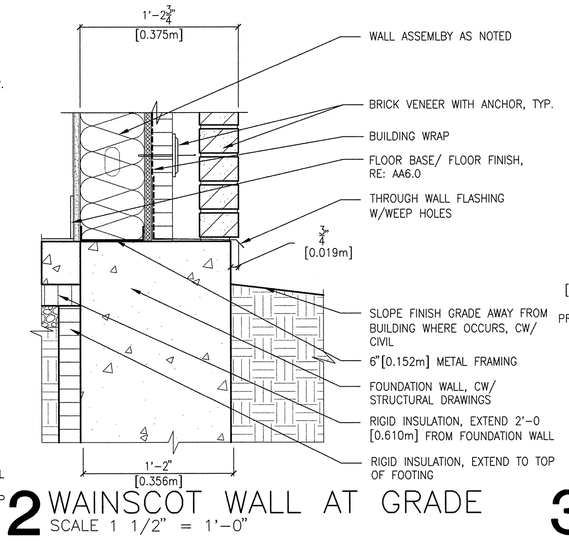

2 WAINSCOT WALL AT GRADE
SCALE 1 1/2" = 1'-0"

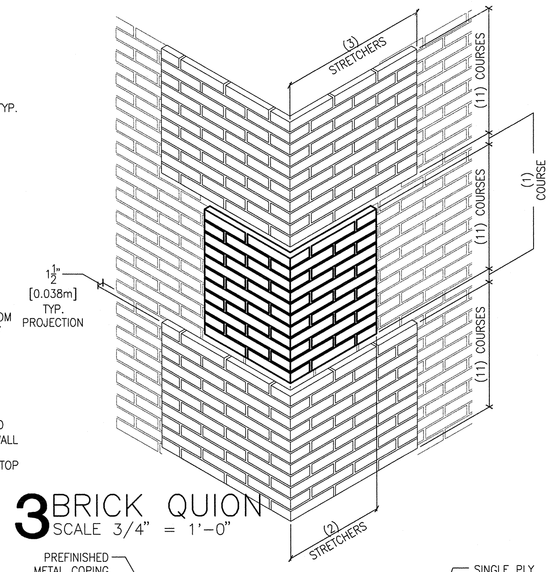

3 BRICK QUION
SCALE 3/4" = 1'-0"

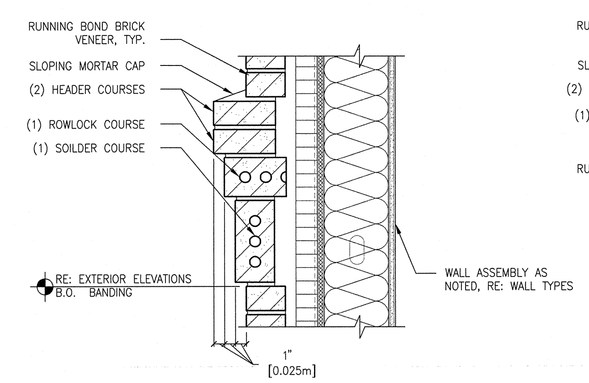

4 BRICK BANDING, TYP.
SCALE 1 1/2" = 1'-0"

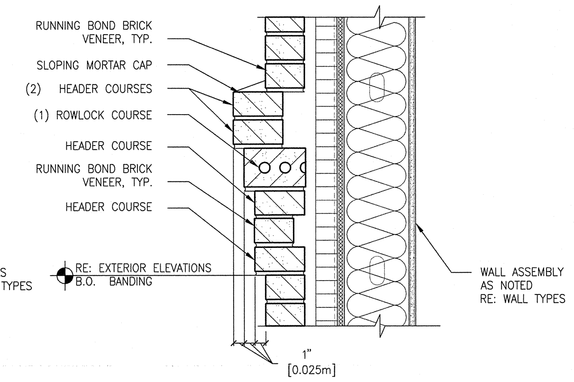

5 BRICK BANDING AT OUTSIDE CORNERS
SCALE 1 1/2" = 1'-0"

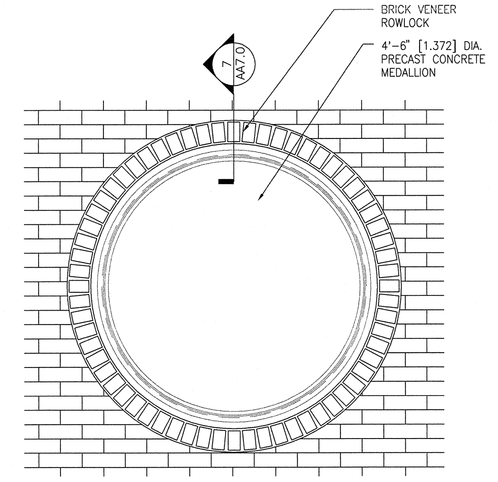

6 MEDALLION
SCALE 3/4" = 1'-0"

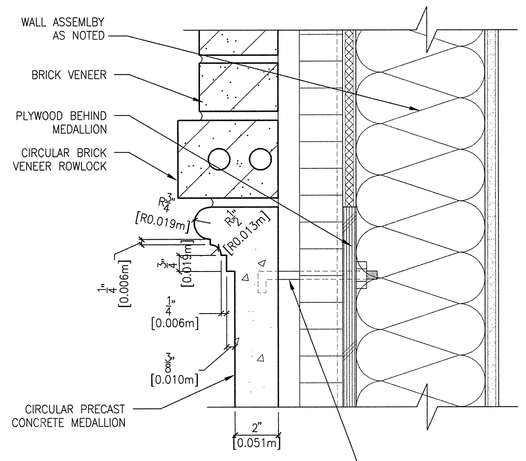

7 MEDALLION
SCALE 3" = 1'-0"

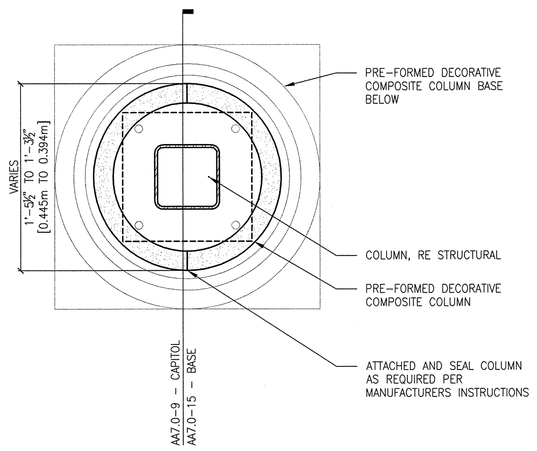

8 EXTERIOR COLUMN PLAN
SCALE 1 1/2" = 1'-0"

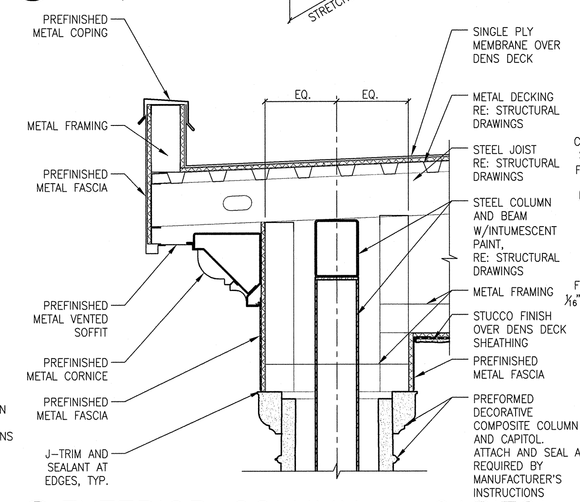

9 EXTERIOR COLUMN – CAPITOL
SCALE 1" = 1'-0"

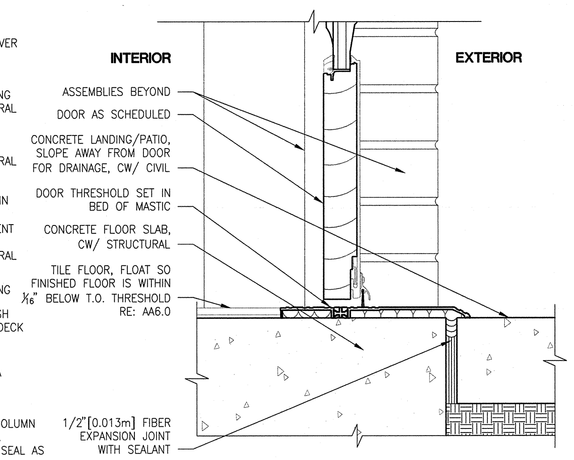

10 DOOR THRESHOLD
SCALE 3" = 1'-0"

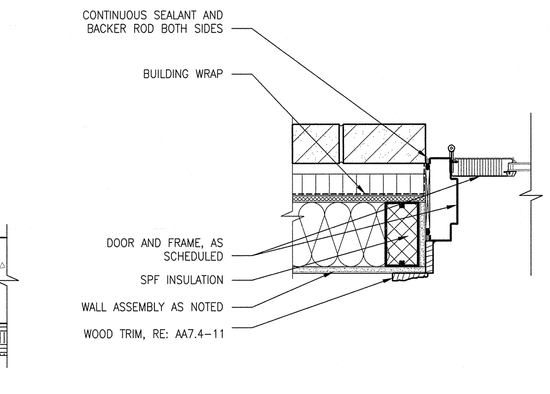

11 EXTERIOR DOOR JAMB
SCALE 1 1/2" = 1'-0"

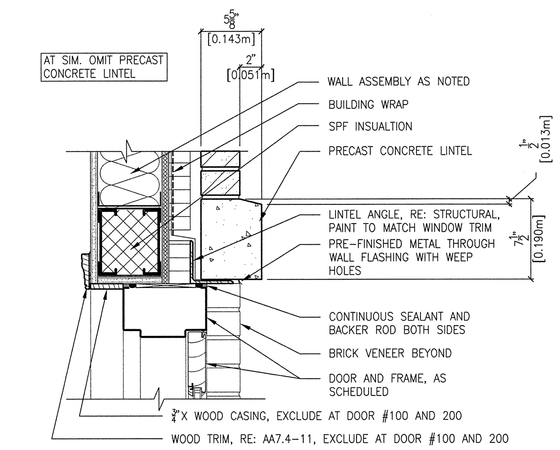

12 EXTERIOR DOOR HEAD
SCALE 1 1/2" = 1'-0"

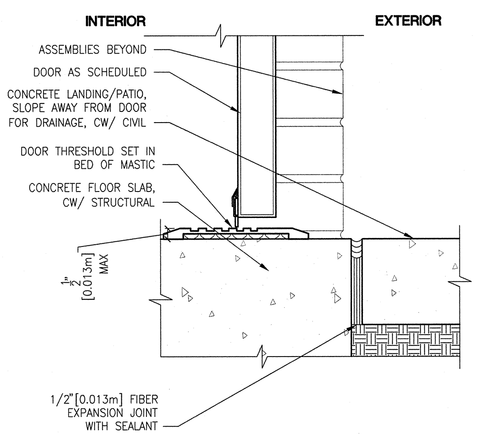

13 DOOR THRESHOLD
SCALE 3" = 1'-0"

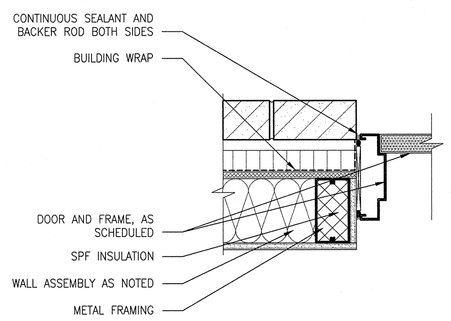

14 EXTERIOR DOOR JAMB
SCALE 1 1/2" = 1'-0"

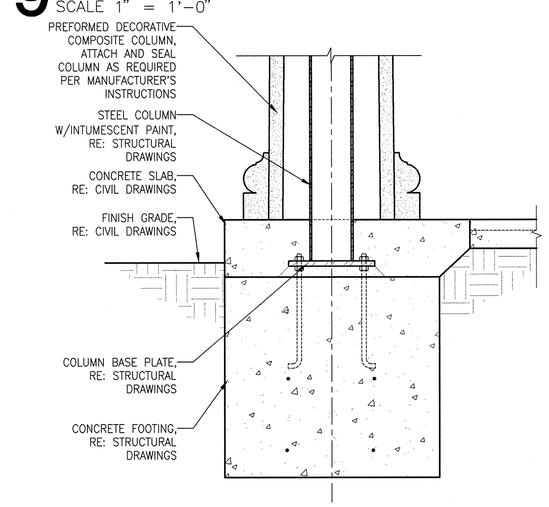

15 EXTERIOR COLUMN – BASE
SCALE 1" = 1'-0"

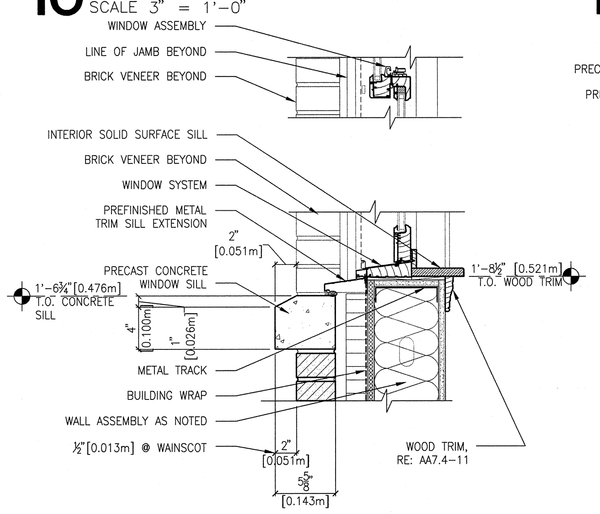

16 SINGLE HUNG WINDOW SILL
SCALE 1 1/2" = 1'-0"

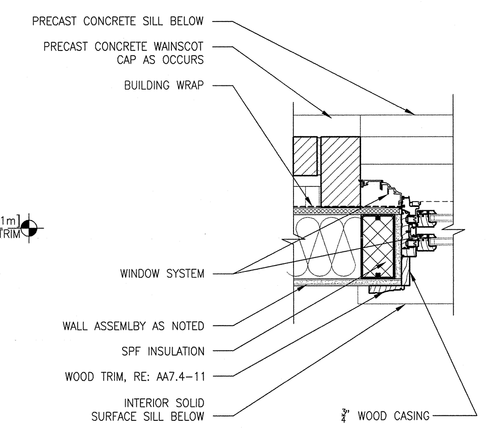

17 SINGLE HUNG WINDOW JAMB
SCALE 1 1/2" = 1'-0"

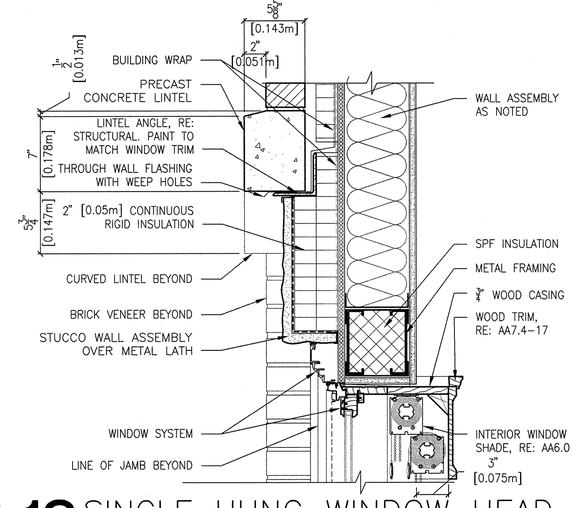

18 SINGLE HUNG WINDOW HEAD
SCALE 1 1/2" = 1'-0"

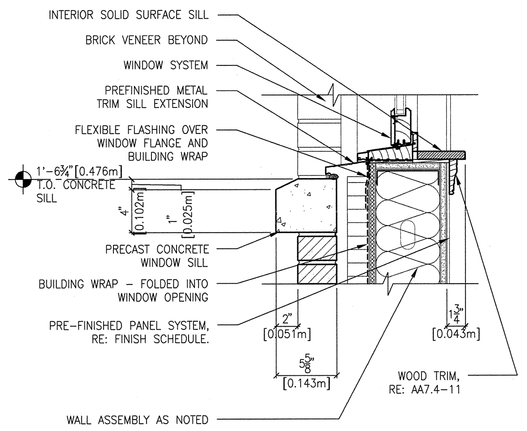

19 FIXED WINDOW SILL
SCALE 1 1/2" = 1'-0"

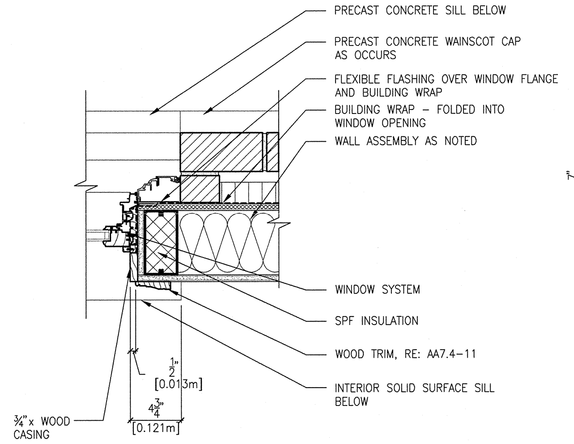

20 FIXED WINDOW JAMB
SCALE 1 1/2" = 1'-0"

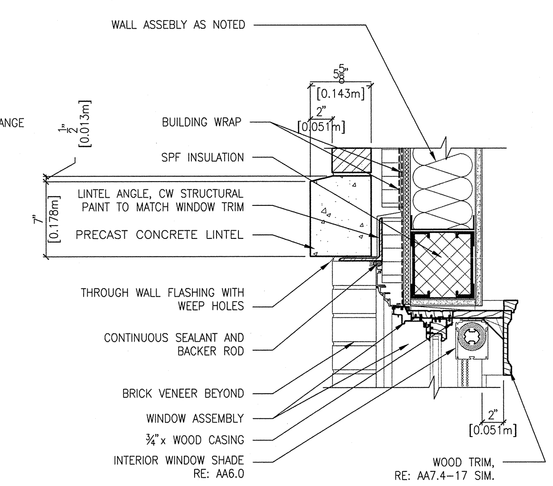

21 FIXED WINDOW HEAD
SCALE 1 1/2" = 1'-0"

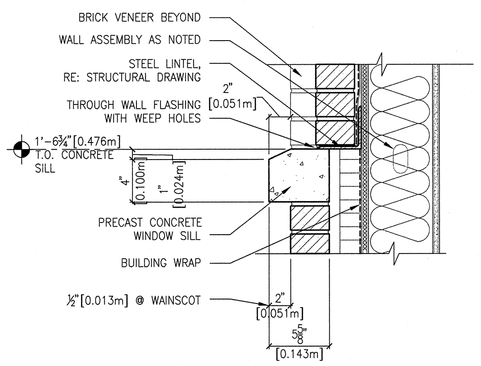

22 BRICK PANEL SILL
SCALE 1 1/2" = 1'-0"

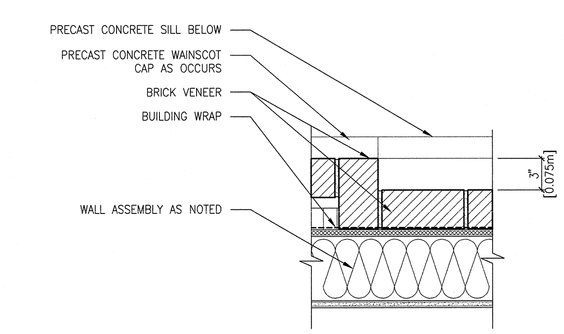

23 BRICK PANEL JAMB
SCALE 1 1/2" = 1'-0"

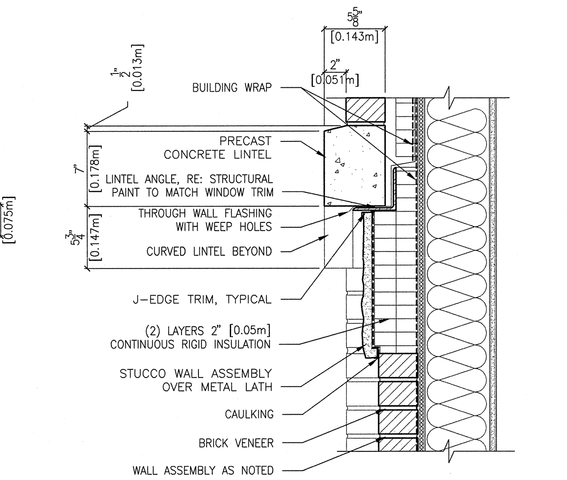

24 BRICK PANEL HEAD
SCALE 1 1/2" = 1'-0"

REVISIONS	DATE

CSHQA

C.W. MOORE PLAZA
250 S. 5TH ST. BOISE, ID 83702
(208) 343-4635 FAX (208) 343-1858
http://www.cshqa.com

JOHN D. MAULIN, ARCHITECT
C.W. MOORE PLAZA
250 S. 5TH ST
BOISE, IDAHO
PHONE: 208-343-4635 FAX: 208-343-1858

THESE DRAWINGS AND SPECIFICATIONS, AS INSTRUMENTS OF SERVICE, ARE AND SHALL REMAIN THE PROPERTY OF THE ARCHITECT / ENGINEER WHETHER THE PROJECT FOR WHICH THEY ARE MADE IS EXECUTED OR NOT. THESE DRAWINGS AND SPECIFICATIONS SHALL NOT BE USED BY ANY PERSON OR ENTITY ON OTHER PROJECTS, FOR ADDITIONS TO THIS PROJECT, OR COMPLETION OF THIS PROJECT WHEN PHASED WITHOUT THE WRITTEN CONSENT OF CSHQA OR ITS AFFILIATES. Copyright ©2011

STAMP
LICENSED ARCHITECT AR 1708
JOHN D. MAULIN STATE OF IDAHO
DECEMBER 01, 2011

ORIGINAL DOCUMENT SIGNED BY ARCHITECT ON FILE WITH THE OWNER
ORIGINAL SIGNED BY: JOHN D. MAULIN
ORIGINAL DATE SIGNED: DECEMBER 01, 2011

CAD FILE NAME: 531-319_AA7.0.DWG
XREF FILE NAME: 531-319_xA_30X42TLBK.DWG

DRAWING TITLE: BUILDING DETAILS

APPROVED: CHIEF OF FACILITY MANAGEMENT SERVICE

APPROVED: MEDICAL CENTER DIRECTOR

PROJECT TITLE: BOISE VAMC NEW EXTENDED CARE UNIT BUILDING 'A' CLC

BUILDING NUMBER: 121
CHECKED: DRD/JDM
DRAWN: BKS
LOCATION: VAMC BOISE, IDAHO

DATE: 12/01/2011
PROJECT NO.: 531-319
DRAWING NO.: AA7.0
DWG 12 OF 58

DEPARTMENT OF VETERANS AFFAIRS

Username: bsmith
Date: Dec 02, 2011 - 12:30pm
Q:\2010\10101.01\Acad\02_Drawings\531-319_AA7.0.dwg