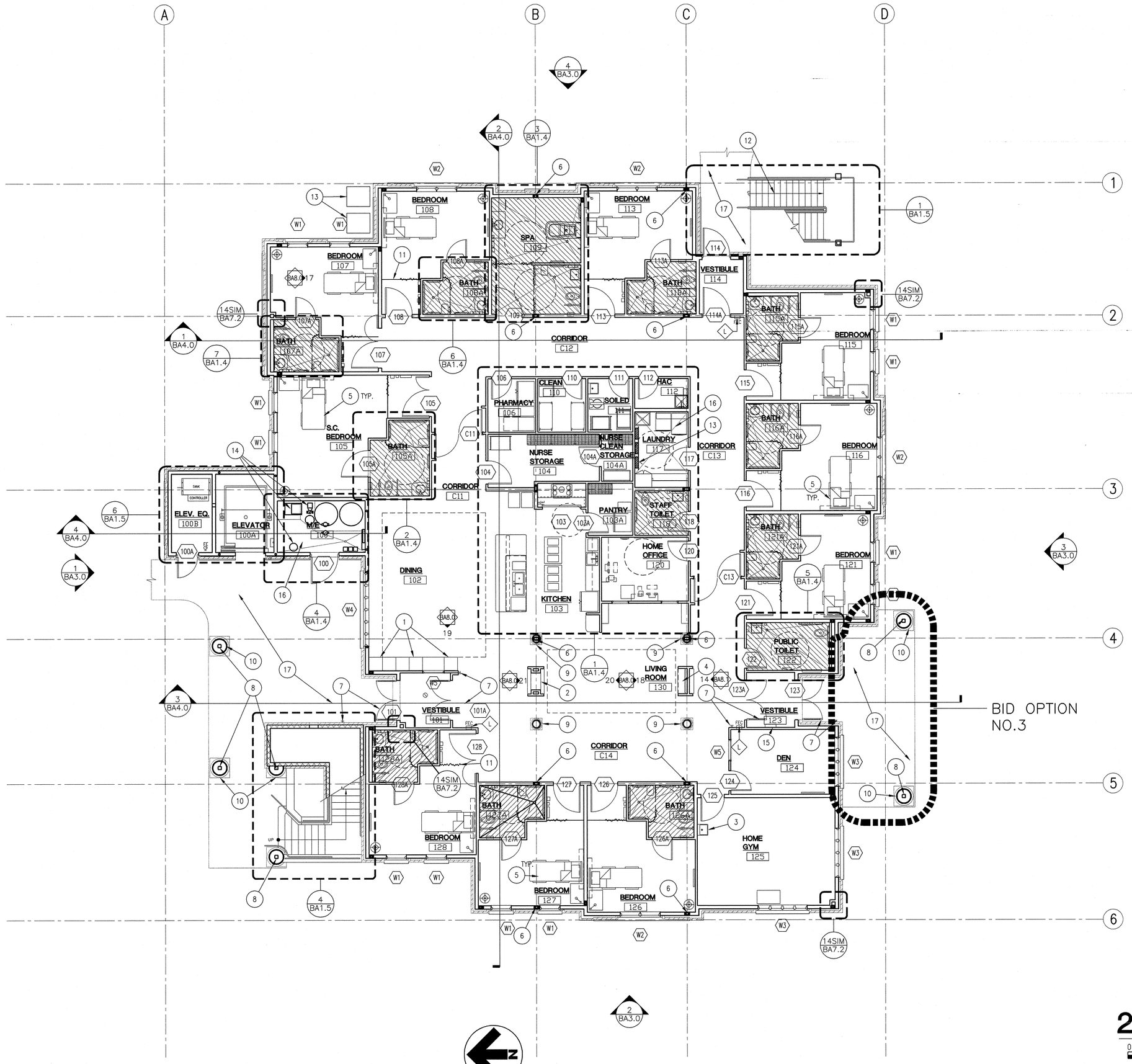

1 FIRST FLOOR PLAN

0' 4' 8' 12' 16' 20' 24'

SCALE: 1/8" = 1'-0"

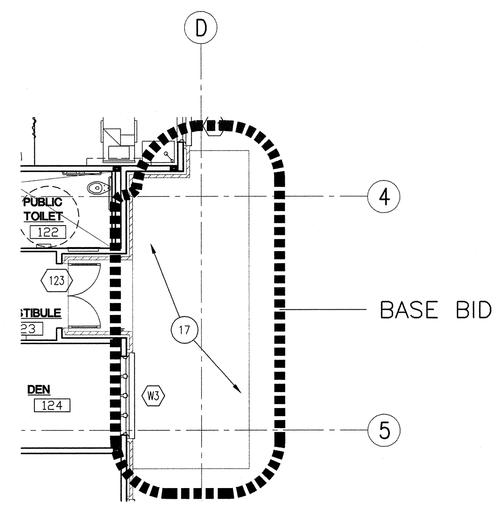

2 FIRST FLOOR PARTIAL PLAN

0' 4' 8' 12' 16' 20' 24'

SCALE: 1/8" = 1'-0"

GENERAL NOTES:

A. RE: BA1.2 FOR WALL TYPES AND DIMENSION PLAN.

B. RE: BA6.1 FOR FURNITURE AND EQUIPMENT PLAN.

C. RE: BA6.4 FOR DOOR SCHEDULE AND WINDOW TYPES.

D. RE: BA6.0 FOR FINISHES.

E. CONTRACTOR SHALL PROVIDE BLOCKING OR BACKING FOR ALL WALL MOUNTED AND RECESSED ACCESSORIES AND EQUIPMENT. ASSURE THAT ALL REQUIRED BACKING IS INSTALLED IN WALLS PRIOR TO INSTALLING DRYWALL. THIS INCLUDES BACKING FOR WALL-MOUNTED DOORSTOPS.

F. PROVIDE MOISTURE RESISTANT GYPSUM WALLBOARD AT WALLS IN ROOMS EXPOSED TO MOISTURE. INCLUDING BUT NOT LIMITED TO RESTROOMS, PLUMBING WALLS WITH SINKS, HAC, LAUNDRY, SOILED, BATHROOMS AND SIMILAIR LOCATIONS.

G. PROVIDE 'J' TRIM AT ALL GYPSUM BOARD TRANSITIONS TO DISSIMILAR MATERIALS.

H. RE: AA8.0 FOR ACCESSORY / EQUIPMENT TYPES INDICATED.

I. RE: BA9.0 FOR REFLECTED CEILING PLAN.

J. EXTERIOR FINISH INFORMATION IS NOT INDICATED NOR DIMENSIONED ON FLOOR PLAN. REFER TO DIMENSION PLAN, EXTERIOR ELEVATIONS, AND BUILDING SECTIONS FOR ADDITIONAL INFORMATION.

K. THE HINGE SIDE OF ALL DOOR FRAMES SHALL BE MOUNTED 4" MIN. [0.102m] FROM ADJACENT PERPENDICULAR WALL U.N.O.

L. RE: MECHANICAL, PLUMBING, AND ELECTRICAL FOR ADDITIONAL INFORMATION.

P. COORDINATE WITH CIVIL DRAWINGS FOR BELOW GRADE ROOF DRAIN PIPING.

SHEET NOTES:

1. MILLWORK, RE: BA8.0 INTERIOR ELEVATIONS.
2. FIRE PLACE, RE: BA7.4-1.
3. SINK, CW/ PLUMBING.
4. ENTERTAINMENT CENTER, RE: BA8.0 INTERIOR ELEVATIONS.
5. BEDROOM FURNITURE SHOWN FOR COORDINATION. OWNER FURNISHED OWNER INSTALLED.
6. FIRE RATED COLUMN, WRAP WITH (2) LAYERS 5/8" GYPSUM BOARD.
7. LOCATION OF AUTOMATIC DOOR BUTTON AND RELATED OPERATING DOOR LEAF.
8. COLUMN WITH INTUMESCENT PAINT.
9. PREMANUFACTURED PAINTED WOOD COLUMN.
10. PRECAST COMPOSITE COLUMN.
11. PRIVACY CURTAIN, TYP.
12. GALVANIZED EXTERIOR STEEL STAIR ASSEMBLY.
13. ELECTRICAL PANELS / SWITCH GEAR, COORDINATE WITH ELECTRICAL DRAWINGS.
14. MECHANICAL CONTROLS AND EQUIPMENT, COORDINATE WITH MECHANICAL DRAWINGS.
15. FIRE ALARM CONTROL PANEL, COORDINATE WITH FIRE PROTECTION DRAWINGS.
16. TOP OF CONCRETE SLAB ON GRADE SHALL BE SLOPED TO THE FLOOR DRAIN WITHIN THE ROOM INDICATED. FLOOR DRAIN ELEVATION TO BE ¾" [0.02m] BELOW ADJACENT FLAT SLAB ELEVATION.
17. CONCRETE PATIO, RE: CIVIL.

LEGEND:

LINE INDICATES NEW CONSTRUCTION

LINE INDICATES SOFFIT/ ROOF ABOVE

HATCH INDICATES AREA OF ¾" [0.02m] RECESSED SLAB

Username: tmontgomery
Dec 05, 2011 - 1:26pm
Q:\2010\10101.0\Arch\02_Drawings\531-319_BA1.0.dwg

REVISIONS	DATE

CSHQA

C.W. MOORE PLAZA
250 S. 5TH ST. BOISE, ID 83702
(208) 343-4635 FAX (208) 343-1858
http://www.cshqa.com

JOHN D. MAULIN, ARCHITECT
C.W. MOORE PLAZA
250 S. 5TH ST
BOISE, IDAHO
PHONE: 208-343-4635 FAX: 208-343-1858

THESE DRAWINGS AND SPECIFICATIONS, AS INSTRUMENTS OF SERVICE, ARE AND SHALL REMAIN THE PROPERTY OF THE ARCHITECT / ENGINEER WHETHER THE PROJECT FOR WHICH THEY ARE MADE IS EXECUTED OR NOT. THESE DRAWINGS AND SPECIFICATIONS SHALL NOT BE USED BY ANY PERSON OR ENTITY ON OTHER PROJECTS, FOR ADDITIONS TO THIS PROJECT, OR COMPLETION OF THIS PROJECT WHEN PHASED WITHOUT THE WRITTEN CONSENT OF CSHQA OR ITS AFFILIATES. Copyright ©2011

STAMP

LICENSED ARCHITECT AR.1706

JOHN D. MAULIN
STATE OF IDAHO

DECEMBER 01, 2011

ORIGINAL DOCUMENT SIGNED BY ARCHITECT ON FILE WITH THE OWNER
ORIGINAL SIGNED BY: JOHN D. MAULIN
ORIGINAL DATE SIGNED: DECEMBER 01, 2011

CAD FILE NAME: 531-319_BA1.0.DWG

XREF FILE NAME:
531-319_xB_30X42TLBK.DWG
531-319_xB_BASE1.DWG
531-319_xB_Panel1.dwg
531-319_BP2.2.dwg
531-319_BM2.4.dwg
531-319_BM2.2.dwg

DRAWING TITLE: FIRST FLOOR PLAN

APPROVED: CHIEF OF FACILITY MANAGEMENT SERVICE

APPROVED: MEDICAL CENTER DIRECTOR

PROJECT TITLE: BOISE VAMC
NEW EXTENDED CARE UNIT
BUILDING 'B' CLC

BUILDING NUMBER: 122
CHECKED: DRD/JDM
DRAWN: TWM

LOCATION: VAMC BOISE, IDAHO

DATE: 12/01/2011

PROJECT NO. 531-319

DRAWING NO. BA1.0

DWG 03 OF 78

DEPARTMENT OF VETERANS AFFAIRS

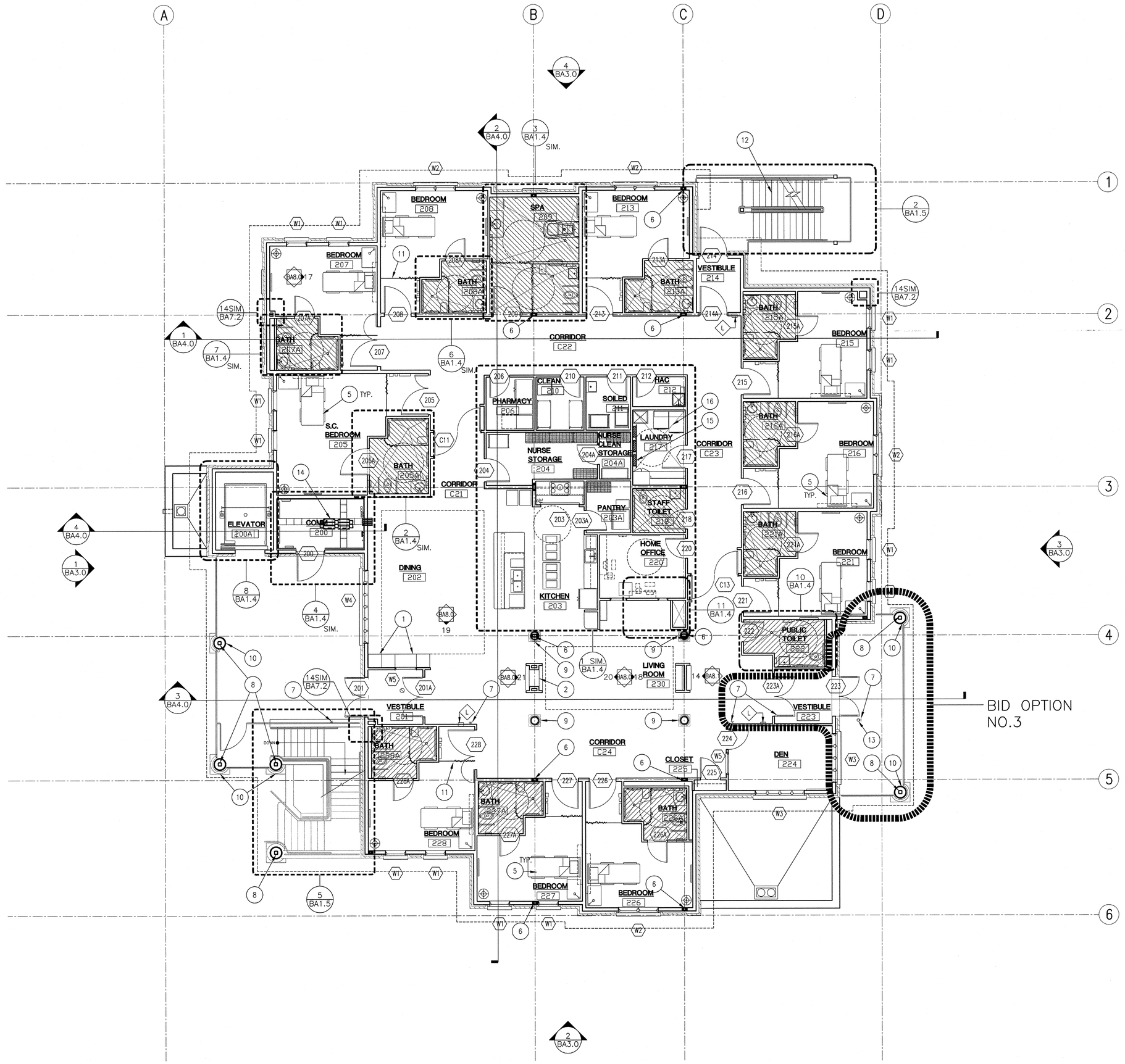

1 SECOND FLOOR PLAN

0' 4' 8' 12' 16' 20' 24'

SCALE: 1/8" = 1'-0"

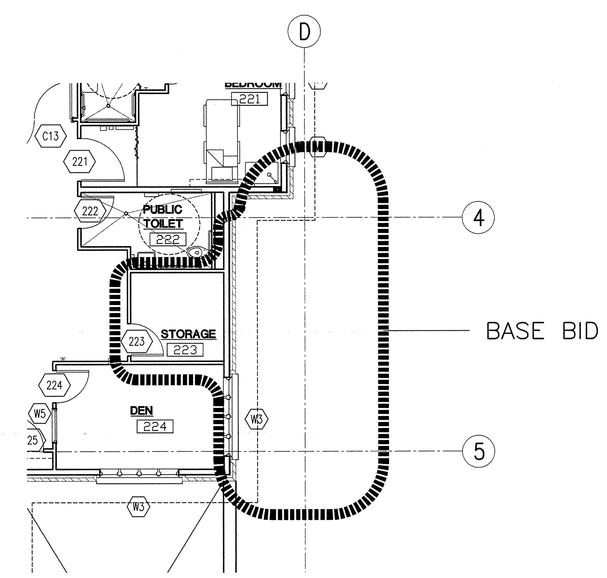

2 SECOND FLOOR PARTIAL PLAN

0' 4' 8' 12' 16' 20' 24'

SCALE: 1/8" = 1'-0"

GENERAL NOTES:

A. RE: BA1.3 FOR WALL TYPES AND DIMENSION PLAN.

B. RE: BA6.3 FOR FURNITURE AND EQUIPMENT PLAN.

C. RE: AA6.5 FOR DOOR, WINDOW AND FRAME SCHEDULES.

D. RE: BA6.2 FOR FINISH SCHEDULE.

E. CONTRACTOR SHALL PROVIDE BLOCKING OR BACKING FOR ALL WALL MOUNTED ACCESSORIES AND EQUIPMENT. ASSURE THAT ALL REQUIRED BACKING IS INSTALLED IN WALLS PRIOR TO INSTALLING DRYWALL. THIS INCLUDES BACKING FOR WALL-MOUNTED DOORSTOPS.

F. PROVIDE MOISTURE RESISTANT GYPSUM WALLBOARD AT ALL AREAS EXPOSED TO MOISTURE. INCLUDING BUT NOT LIMITED TO RESTROOMS, PLUMBING WALLS WITH SINKS, HAC, LAUNDRY, AND SIMILAR LOCATIONS.

G. PROVIDE 'J' TRIM AT ALL GYPSUM BOARD TRANSITIONS TO DISSIMILAR MATERIALS.

H. RE: BA8.0 FOR ACCESSORY / EQUIPMENT TYPES INDICATED.

I. RE: BA9.1 FOR REFLECTED CEILING PLAN.

J. EXTERIOR FINISH INFORMATION IS NOT INDICATED NOR DIMENSIONED ON FLOOR PLAN. REFER TO DIMENSION PLAN, EXTERIOR ELEVATIONS, AND BUILDING SECTIONS FOR ADDITIONAL INFORMATION.

K. THE HINGE SIDE OF ALL DOOR FRAMES SHALL BE MOUNTED 4" MIN. [0.102m] FROM ADJACENT PERPENDICULAR WALL U.N.O.

L. RE: MECHANICAL, PLUMBING, AND ELECTRICAL FOR SCOPE OF MECHANICAL, PLUMBING, AND ELECTRICAL WORK.

P. COORDINATE WITH CIVIL DRAWINGS FOR BELOW GRADE ROOF DRAIN PIPING.

SHEET NOTES:

1. MILLWORK, RE: BA8.0 INTERIOR ELEVATIONS.
2. FIRE PLACE, RE: BA7.4-1.
3. SINK, CW/ PLUMBING.
4. ENTERTAINMENT CENTER, RE: BA8.0 INTERIOR ELEVATIONS.
5. BEDROOM FURNITURE SHOWN FOR COORDINATION. OWNER FURNISHED OWNER INSTALLED.
6. FIRE RATED COLUMN, WRAP WITH (2) LAYERS 5/8" GYPSUM BOARD.
7. LOCATION OF AUTOMATIC DOOR BUTTON.
8. COLUMN WITH INTUMESCENT PAINT.
9. PREMANUFACTURED PAINTED WOOD COLUMN.
10. PRECAST COMPOSITE COLUMN.
11. PRIVACY CURTAIN, TYP.
12. GALVANIZED EXTERIOR STEEL STAIR ASSEMBLY.
13. PAINTED STEEL 4x4 BOLLARD ASSEMBLY W/ DOOR ACTIVATION BUTTON.
14. TELECOMMUNICATIONS EQUIPMENT, COORDINATE WITH TELECOMM DRAWINGS.
15. ELECTRICAL PANELS / SWITCH GEAR, COORDINATE WITH ELECTRICAL DRAWINGS.
16. TOP OF CONCRETE SLAB ON GRADE SHALL BE SLOPED TO THE FLOOR DRAIN WITHIN THE ROOM INDICATED. FLOOR DRAIN ELEVATION TO BE ¾" [0.02m] BELOW ADJACENT FLAT SLAB ELEVATION.

LEGEND:

LINE INDICATES NEW CONSTRUCTION

LINE INDICATES LINE OF SOFFIT/ROOF ABOVE

HATCH INDICATES AREA OF ¾" [0.02m] RECESSED SLAB

Username: tmontgomery
Dec 05, 2011 - 1:45pm
Q:\2010\10101.0\Arch\02_Drawings\531-319_BA1.1.dwg

REVISIONS	DATE

CSHQA

C.W. MOORE PLAZA
250 S. 5TH ST. BOISE, ID 83702
(208) 343-4635 FAX (208) 343-1858
http://www.cshqa.com

JOHN D. MAULIN, ARCHITECT
C.W. MOORE PLAZA
250 S. 5TH ST
BOISE, IDAHO
PHONE: 208-343-4635 FAX: 208-343-1858

THESE DRAWINGS AND SPECIFICATIONS, AS INSTRUMENTS OF SERVICE, ARE AND SHALL REMAIN THE PROPERTY OF THE ARCHITECT / ENGINEER WHETHER THE PROJECT FOR WHICH THEY ARE MADE IS EXECUTED OR NOT. THESE DRAWINGS AND SPECIFICATIONS SHALL NOT BE USED BY ANY PERSON OR ENTITY ON OTHER PROJECTS, FOR ADDITIONS TO THIS PROJECT, OR COMPLETION OF THIS PROJECT WHEN PHASED WITHOUT THE WRITTEN CONSENT OF CSHQA OR ITS AFFILIATES. Copyright ©2011

STAMP

LICENSED ARCHITECT AR 1706

JOHN D. MAULIN STATE OF IDAHO

DECEMBER 01, 2011

ORIGINAL DOCUMENT SIGNED BY ARCHITECT ON FILE WITH THE OWNER ORIGINAL SIGNED BY: JOHN D. MAULIN ORIGINAL DATE SIGNED: DECEMBER 01, 2011

CAD FILE NAME: 531-319_BA1.1.DWG

XREF FILE NAME: 531-319_xB_30X42TLBK.DWG
531-319_xB_BASE2.DWG
531-319_xB_Panel2.DWG
531-319_BE4.2.DWG

DRAWING TITLE: SECOND FLOOR PLAN

APPROVED: CHIEF OF FACILITY MANAGEMENT SERVICE

APPROVED: MEDICAL CENTER DIRECTOR

PROJECT TITLE: BOISE VAMC NEW EXTENDED CARE UNIT BUILDING 'B' CLC

BUILDING NUMBER: 122 | CHECKED: DRD/JDM | DRAWN: TWM

LOCATION: VAMC BOISE, IDAHO

DATE: 12/01/2011

PROJECT NO.: 531-319

DRAWING NO.: BA1.1

DWG 04 OF 78

DEPARTMENT OF VETERANS AFFAIRS

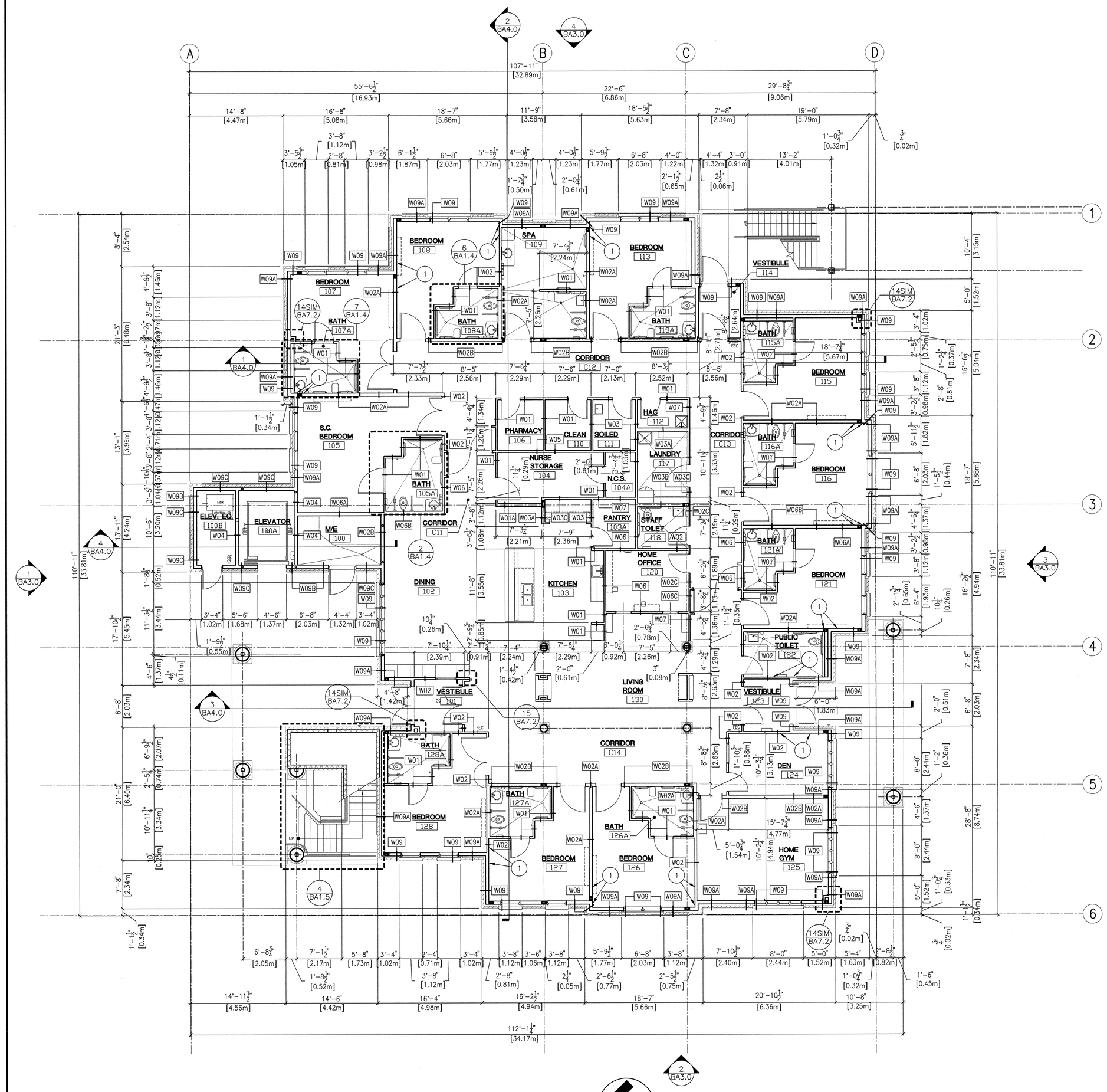

1 FIRST FLOOR DIMENSION PLAN

0' 4' 8' 12' 16' 20' 24'

SCALE: 1/8" = 1'-0"

GENERAL NOTES:

A. PARTITION DIMENSIONS ARE GIVEN TO THE FACE OF STUD UNLESS OTHERWISE NOTED.

B. MASONRY DIMENSIONS ARE GIVEN TO FACE OF MASONRY AND TO THE FACE OF ROUGH OPENINGS.

C. DOOR AND WINDOW OPENING LOCATIONS ARE DIMENSIONED TO ROUGH OPENING OR CENTERLINE OF OPENING. COORDINATE WITH DOOR SCHEDULE AND WINDOW TYPES, SHEET BA6.4 AND BA6.5.

D. IF A WALL TYPE IS NOT INDICATED ON A WALL, USE THE TYPICAL WALL TYPE AS NOTED BELOW.

E. CONTRACTOR SHALL PROVIDE BLOCKING OR BACKING FOR ALL WALL-MOUNTED ACCESSORIES AND EQUIPMENT. ASSURE THAT ALL REQUIRED BACKING IS INSTALLED IN WALLS PRIOR TO INSTALLING DRYWALL. THIS INCLUDES BACKING FOR WALL-MOUNTED DOORSTOPS.

F. ALL GYPSUM WALL BOARD TO BE TYPE 'X'. PROVIDE MOISTURE RESISTANT GYPSUM BOARD BEHIND CERAMIC WALL TILE, U.O.N.

G. GYPSUM WALL BOARD SHALL EXTEND FULL HEIGHT OF WALL TO UNDERSIDE OF DECK ABOVE UNLESS OTHERWISE NOTED. SEE WALL TYPES.

H. UTILIZE MOISTURE RESISTANT GYPSUM WALL BOARD ON ALL WALLS AT: BATHS, SPA AND TOILETS.

I. PENETRATIONS THROUGH RATED ASSEMBLIES SHALL BE FIRE STOPPED IN ACCORDANCE WITH NFPA STANDARDS.

WALL TYPES:

W01	NON-RATED PARTITION 16mm (5/8") GYPSUM WALL BOARD EACH SIDE OF 92mm (3 5/8") METAL STUDS (U.O.N) @ 406mm (16") O.C. TO 150mm (6") ABOVE CEILING (U.O.N.); BRACE AT 1219mm (48") O.C. ALTERNATING TO STRUCTURE ABOVE.
W01A	NON-RATED PARTITION SAME AS W01 EXCEPT WITH 150mm (6") METAL STUDS
W02	NON-RATED SOUND WALL 16mm (5/8") GYPSUM WALL BOARD EACH SIDE OF 92mm (3 5/8") METAL STUDS (U.O.N.) @ 406mm (16") O.C.; EXTEND TO DECK ABOVE; TAPE JOINTS ABOVE CEILING. PROVIDE SOUND BATT INSULATION FROM FINISH FLOOR TO DECK ABOVE.
W02A	NON-RATED SOUND WALL SAME AS W02 EXCEPT WITH 150mm (6") METAL STUDS
W02B	NON-RATED SOUND AND SHEAR WALL SAME AS W02A EXCEPT WITH 16mm (5/8") SURE-BOARD, RE: STRUCTURAL.
W02C	NON-RATED SOUND AND SHEAR WALL SAME AS W02 EXCEPT WITH 16mm (5/8") SURE-BOARD, RE: STRUCTURAL.
W03	1-HOUR FIRE RATED WALL 16mm (5/8") GYPSUM WALL BOARD EACH SIDE OF 92mm (3 5/8") METAL STUDS @ 406mm (16") O.C.; EXTEND TO DECK ABOVE; FIRE TAPE JOINTS ABOVE CEILING; FIRESAFE JOINTS AND PENETRATIONS.
W03A	1-HOUR FIRE RATED WALL SAME AS W03 EXCEPT WITH 150mm (6") METAL STUDS
W03B	1-HOUR FIRE RATED SHEAR WALL SAME AS W03A EXCEPT WITH 16mm (5/8") SURE-BOARD, RE: STRUCTURAL.
W03C	1-HOUR FIRE RATED SHEAR WALL SAME AS W03 EXCEPT WITH 16mm (5/8") SURE-BOARD, RE: STRUCTURAL.
W04	1-HOUR FIRE RATED SOUND WALL 16mm (5/8") GYPSUM WALL BOARD EACH SIDE OF 150mm (6") METAL STUDS @ 406mm (16") O.C.; EXTEND TO DECK ABOVE; FIRE TAPE JOINTS ABOVE CEILING; FIRESAFE JOINTS AND PENETRATIONS. PROVIDE SOUND BATT INSULATION FROM FINISH FLOOR TO DECK ABOVE.
W05	1-HOUR RATED SMOKE BARRIER 16mm (5/8") GYPSUM WALL BOARD EACH SIDE OF 92mm (3 5/8") METAL STUDS @ 406mm (16") O.C.; EXTEND TO DECK ABOVE; FIRE TAPE JOINTS ABOVE CEILING; FIRESAFE JOINTS AND PENETRATIONS.
W06	1-HOUR RATED SMOKE BARRIER AND SOUND WALL 16mm (5/8") GYPSUM WALL BOARD EACH SIDE OF 92mm (3 5/8") METAL STUDS @ 406mm (16") O.C.; EXTEND TO DECK ABOVE; FIRE TAPE JOINTS ABOVE CEILING; FIRESAFE JOINTS AND PENETRATIONS. PROVIDE SOUND BATT INSULATION FROM FINISH FLOOR TO DECK ABOVE.
W06A	1-HOUR RATED SMOKE BARRIER AND SOUND WALL SAME AS W06 EXCEPT WITH 150mm (6") METAL STUDS
W06C	1-HOUR RATED SMOKE BARRIER AND SOUND WALL SAME AS W06 EXCEPT WITH 16mm (5/8") SURE-BOARD, RE: STRUCTURAL
W06B	1-HOUR RATED SMOKE BARRIER AND SOUND WALL SAME AS W06A EXCEPT WITH 16mm (5/8") SURE-BOARD, RE: STRUCTURAL
W07	NON-RATED SHEAR WALL 16mm (5/8") GYPSUM WALL BOARD OR SURE-BOARD EACH SIDE OF 92mm (3 5/8") METAL STUDS (U.O.N.) @ 406mm (16") O.C.; EXTEND TO DECK ABOVE; TAPE JOINTS ABOVE CEILING. RE: STRUCTURAL FOR SURE-BOARD LOCATIONS.
W08	NON-RATED CHASE WALL 16mm (5/8") GYPSUM WALL BOARD ON ONE SIDE OF 92mm (3 5/8") METAL STUDS (U.O.N) @ 406mm (16") O.C. TO 150mm (6") ABOVE CEILING (U.O.N.); BRACE AT 1219mm (48") O.C. ALTERNATING TO STRUCTURE ABOVE.
W09	1-HOUR RATED TYPICAL EXTERIOR BEARING WALL 16mm (5/8") GYPSUM WALL BOARD ON INSIDE OF 150mm (6") STRUCTURAL STUDS @ 406mm (16") O.C.; VAPOR BARRIER; R-19 BATT INSULATION; 16mm (5/8") FIRE-RATED GLASS-MATT SHEATHING; BUILDING WRAP; 2" RIGID INSULATION; AIR SPACE AND BRICK VENEER.
W09A	1-HOUR RATED EXTERIOR BEARING SHEAR WALL SAME AS W09 EXCEPT REPLACE FIRE-RATED GLASS MATT SHEATHING WITH 16mm (5/8") SURE-BOARD, RE: STRUCTURAL
W09B	1-HOUR RATED EXTERIOR BEARING WALL SAME AS W09 EXCEPT OMIT 2" RIGID INSULATION.
W09C	1-HOUR RATED EXTERIOR BEARING SHEAR WALL SAME AS W09 EXCEPT REPLACE FIRE-RATED GLASS MATT SHEATHING WITH 16mm (5/8") SURE-BOARD, RE: STRUCTURAL, AND OMIT 2" RIGID INSULATION

NOTES:
1) REFER TO DETAILS BA7.2-22 THRU 24 AND BA7.3-1 THRU 4 FOR LATERAL BRACING OF WALLS, NON SLIP TRACKS, AND RATED WALL TERMINATIONS.

LEGEND:

—— LINE INDICATES NEW CONSTRUCTION

-------- LINE INDICATES SOFFIT/ROOF ABOVE

#SHEETNOTES:

1. INTERIOR WALL FRAMING TO ALIGN WITH EXTERIOR WALL FRAMING.
2. WALL FRAMING TO BE CENTERED ON GRIDLINE.
3. FIRE RATED COLUMN. WRAP WITH (2) LAYERS 5/8" GYPSUM BOARD.

REVISIONS	DATE

CSHQA
C.W. MOORE PLAZA
250 S. 5TH ST. BOISE, ID 83702
(208) 343-4635 FAX (208) 343-1858
http://www.cshqa.com

JOHN D. MAULIN, ARCHITECT
C.W. MOORE PLAZA
250 S. 5TH ST
BOISE, IDAHO
PHONE: 208-343-4635 FAX: 208-343-1858

THESE DRAWINGS AND SPECIFICATIONS, AS INSTRUMENTS OF SERVICE, ARE AND SHALL REMAIN THE PROPERTY OF THE ARCHITECT / ENGINEER WHETHER THE PROJECT FOR WHICH THEY ARE MADE IS EXECUTED OR NOT. THESE DRAWINGS AND SPECIFICATIONS SHALL NOT BE USED BY ANY PERSON OR ENTITY ON OTHER PROJECTS, FOR ADDITIONS TO THIS PROJECT, OR COMPLETION OF THIS PROJECT WHEN PHASED WITHOUT THE WRITTEN CONSENT OF CSHQA OR ITS AFFILIATES. Copyright ©2011

STAMP
LICENSED ARCHITECT AR 1756
JOHN D. MAULIN STATE OF IDAHO
DECEMBER 01, 2011

ORIGINAL DOCUMENT SIGNED BY ARCHITECT ON FILE WITH THE OWNER
ORIGINAL SIGNED BY: JOHN D. MAULIN
ORIGINAL DATE SIGNED: DECEMBER 01, 2011

CAD FILE NAME:
531-319_BA1.2.DWG

XREF FILE NAME:
531-319_xB_30X42TLBK.DWG
531-319_xB_BASE1.DWG
531-319_xWALL TYPES.DWG

DRAWING TITLE
FIRST FLOOR DIMENSION PLAN

APPROVED: CHIEF OF FACILITY MANAGEMENT SERVICE

APPROVED: MEDICAL CENTER DIRECTOR

PROJECT TITLE
BOISE VAMC
NEW EXTENDED CARE UNIT
BUILDING 'B' CLC

BUILDING NUMBER	CHECKED	DRAWN
122	DRD/JDM	TWM

LOCATION
VAMC BOISE, IDAHO

DATE
12/01/2011

PROJECT NO.
531-319

DRAWING NO.
BA1.2

DWG 05 OF 78

DEPARTMENT OF VETERANS AFFAIRS

Username: bsmith
Date: 12/02/2011 12:32pm
O:\2010\10101.0\Arch\02_Drawings\531-319_BA1.2.dwg

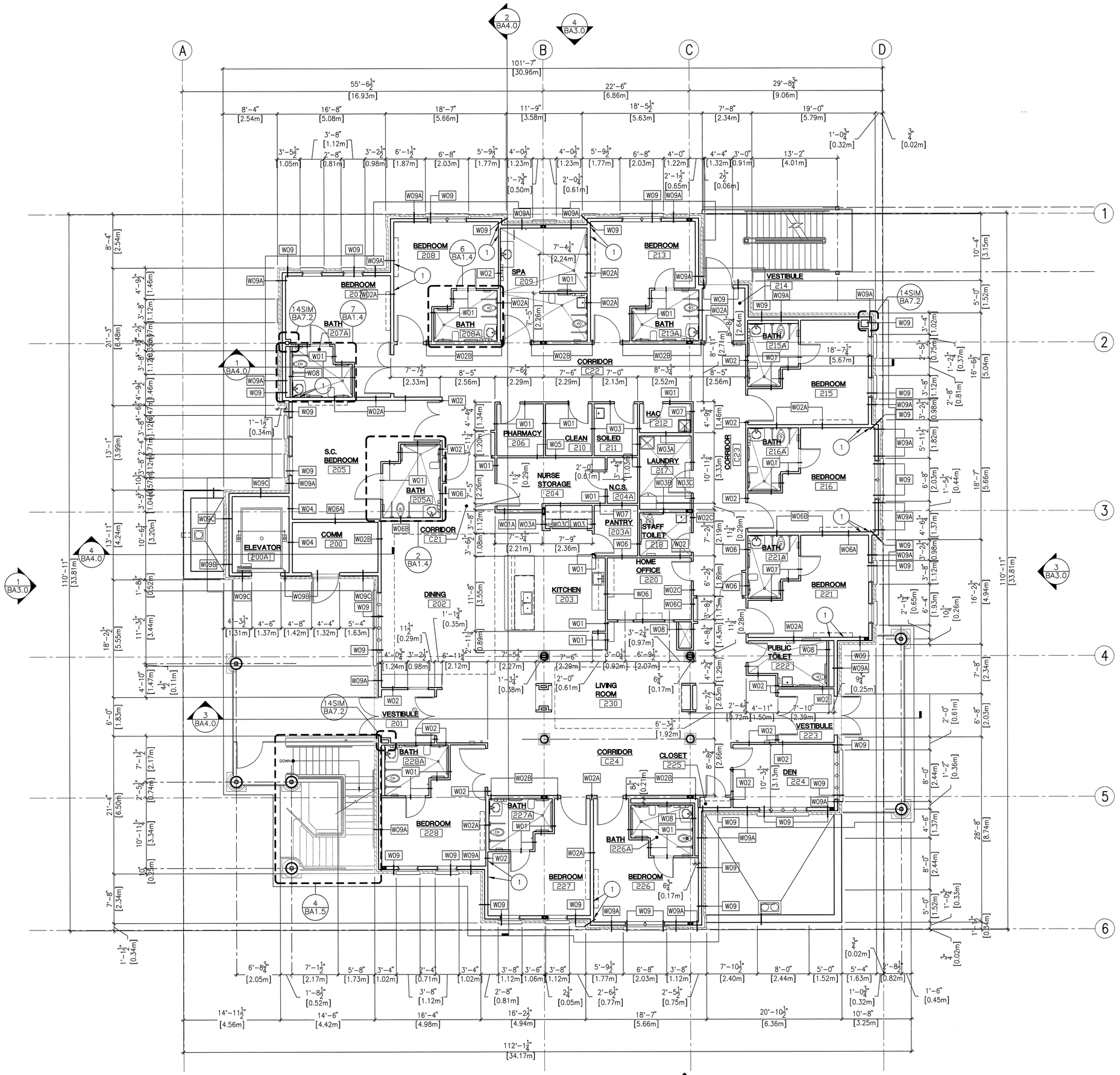

1 SECOND FLOOR DIMENSION PLAN

0' 4' 8' 12' 16' 20' 24'

SCALE: 1/8" = 1'-0"

GENERAL NOTES:

A. PARTITION DIMENSIONS ARE GIVEN TO THE FACE OF STUD UNLESS OTHERWISE NOTED.

B. MASONRY DIMENSIONS ARE GIVEN TO FACE OF MASONRY AND TO THE FACE OF ROUGH OPENINGS.

C. DOOR AND WINDOW OPENING LOCATIONS ARE DIMENSIONED TO ROUGH OPENING OR CENTERLINE OF OPENING. COORDINATE WITH DOOR SCHEDULE AND WINDOW TYPES, SHEET BA6.4 AND BA6.5.

D. IF A WALL TYPE IS NOT INDICATED ON A WALL, USE THE TYPICAL WALL TYPE AS NOTED BELOW.

E. CONTRACTOR SHALL PROVIDE BLOCKING OR BACKING FOR ALL WALL-MOUNTED ACCESSORIES AND EQUIPMENT. ASSURE THAT ALL REQUIRED BACKING IS INSTALLED IN WALLS PRIOR TO INSTALLING DRYWALL. THIS INCLUDES BACKING FOR WALL-MOUNTED DOORSTOPS.

F. ALL GYPSUM WALL BOARD TO BE TYPE 'X'. PROVIDE MOISTURE RESISTANT GYPSUM BOARD BEHIND CERAMIC WALL TILE, U.O.N.

G. GYPSUM WALL BOARD SHALL EXTEND FULL HEIGHT OF WALL TO UNDERSIDE OF DECK ABOVE UNLESS OTHERWISE NOTED. SEE WALL TYPES.

H. UTILIZE MOISTURE RESISTANT GYPSUM WALL BOARD ON ALL WALLS AT: BATHS, SPA AND TOILETS.

I. PENETRATIONS THROUGH RATED ASSEMBLIES SHALL BE FIRE STOPPED IN ACCORDANCE WITH NFPA STANDARDS.

WALL TYPES:

W01	NON-RATED PARTITION 16mm (5/8") GYPSUM WALL BOARD EACH SIDE OF 92mm (3 5/8") METAL STUDS (U.O.N) @ 406mm (16") O.C. TO 150mm (6") ABOVE CEILING (U.O.N.); BRACE AT 1219mm (48") O.C. ALTERNATING TO STRUCTURE ABOVE.
W01A	NON-RATED PARTITION SAME AS W01 EXCEPT WITH 150mm (6") METAL STUDS
W02	NON-RATED SOUND WALL 16mm (5/8") GYPSUM WALL BOARD EACH SIDE OF 92mm (3 5/8") METAL STUDS (U.O.N) @ 406mm (16") O.C.; EXTEND TO DECK ABOVE; TAPE JOINTS ABOVE CEILING. PROVIDE SOUND BATT INSULATION FROM FINISH FLOOR TO DECK ABOVE.
W02A	NON-RATED SOUND WALL SAME AS W02 EXCEPT WITH 150mm (6") METAL STUDS
W02B	NON-RATED SOUND AND SHEAR WALL SAME AS W02A EXCEPT WITH 16mm (5/8") SURE-BOARD, RE: STRUCTURAL.
W02C	NON-RATED SOUND AND SHEAR WALL SAME AS W02 EXCEPT WITH 16mm (5/8") SURE-BOARD, RE: STRUCTURAL.
W03	1-HOUR FIRE RATED WALL 16mm (5/8") GYPSUM WALL BOARD EACH SIDE OF 92mm (3 5/8") METAL STUDS @ 406mm (16") O.C.; EXTEND TO DECK ABOVE; FIRE TAPE JOINTS ABOVE CEILING; FIRESAFE JOINTS AND PENETRATIONS.
W03A	1-HOUR FIRE RATED WALL SAME AS W03 EXCEPT WITH 150mm (6") METAL STUDS
W03B	1-HOUR FIRE RATED SHEAR WALL SAME AS W03A EXCEPT WITH 16mm (5/8") SURE-BOARD, RE: STRUCTURAL.
W03C	1-HOUR FIRE RATED SHEAR WALL SAME AS W03 EXCEPT WITH 16mm (5/8") SURE-BOARD, RE: STRUCTURAL.
W04	1-HOUR FIRE RATED SOUND WALL 16mm (5/8") GYPSUM WALL BOARD EACH SIDE OF 150mm (6") METAL STUDS @ 406mm (16") O.C.; EXTEND TO DECK ABOVE; FIRE TAPE JOINTS ABOVE CEILING; FIRESAFE JOINTS AND PENETRATIONS. PROVIDE SOUND BATT INSULATION FROM FINISH FLOOR TO DECK ABOVE.
W05	1-HOUR RATED SMOKE BARRIER 16mm (5/8") GYPSUM WALL BOARD EACH SIDE OF 92mm (3 5/8") METAL STUDS @ 406mm (16") O.C.; EXTEND TO DECK ABOVE; FIRE TAPE JOINTS ABOVE CEILING; FIRESAFE JOINTS AND PENETRATIONS.
W06	1-HOUR RATED SMOKE BARRIER AND SOUND WALL 16mm (5/8") GYPSUM WALL BOARD EACH SIDE OF 92mm (3 5/8") METAL STUDS @ 406mm (16") O.C.; EXTEND TO DECK ABOVE; FIRE TAPE JOINTS ABOVE CEILING; FIRESAFE JOINTS AND PENETRATIONS. PROVIDE SOUND BATT INSULATION FROM FINISH FLOOR TO DECK ABOVE.
W06A	1-HOUR RATED SMOKE BARRIER AND SOUND WALL SAME AS W06 EXCEPT WITH 150mm (6") METAL STUDS
W06C	1-HOUR RATED SMOKE BARRIER AND SOUND WALL SAME AS W06 EXCEPT WITH 16mm (5/8") SURE-BOARD, RE: STRUCTURAL
W06B	1-HOUR RATED SMOKE BARRIER AND SOUND WALL SAME AS W06A EXCEPT WITH 16mm (5/8") SURE-BOARD, RE: STRUCTURAL
W07	NON-RATED SHEAR WALL 16mm (5/8") GYPSUM WALL BOARD OR SURE-BOARD EACH SIDE OF 92mm (3 5/8") METAL STUDS (U.O.N.) @ 406mm (16") O.C.; EXTEND TO DECK ABOVE; TAPE JOINTS ABOVE CEILING. RE: STRUCTURAL FOR SURE-BOARD LOCATIONS.
W08	NON-RATED CHASE WALL 16mm (5/8") GYPSUM WALL BOARD ON ONE SIDE OF 92mm (3 5/8") METAL STUDS (U.O.N) @ 406mm (16") O.C. TO 150mm (6") ABOVE CEILING (U.O.N.); BRACE AT 1219mm (48") O.C. ALTERNATING TO STRUCTURE ABOVE.
W09	1-HOUR RATED TYPICAL EXTERIOR BEARING WALL 16mm (5/8") GYPSUM WALL BOARD ON INSIDE OF 150mm (6") STRUCTURAL STUDS @ 406mm (16") O.C.; VAPOR BARRIER; R-19 BATT INSULATION; 16mm (5/8") FIRE-RATED GLASS-MATT SHEATHING; BUILDING WRAP; 2" RIGID INSULATION; AIR SPACE AND BRICK VENEER.
W09A	1-HOUR RATED EXTERIOR BEARING SHEAR WALL SAME AS W09 EXCEPT REPLACE FIRE-RATED GLASS MATT SHEATHING WITH 16mm (5/8") SURE-BOARD, RE: STRUCTURAL
W09B	1-HOUR RATED EXTERIOR BEARING WALL SAME AS W09 EXCEPT OMIT 2" RIGID INSULATION.
W09C	1-HOUR RATED EXTERIOR BEARING SHEAR WALL SAME AS W09 EXCEPT REPLACE FIRE-RATED GLASS MATT SHEATHING WITH 16mm (5/8") SURE-BOARD, RE: STRUCTURAL, AND OMIT 2" RIGID INSULATION

NOTES:
1) REFER TO DETAILS BA7.2-22 THRU 24 AND BA7.3-1 THRU 4 FOR LATERAL BRACING OF WALLS, NON SLIP TRACKS, AND RATED WALL TERMINATIONS.

LEGEND:

—— LINE INDICATES NEW CONSTRUCTION

- - - - LINE INDICATES LINE OF SOFFIT/ROOF ABOVE

#SHEETNOTES:

1. INTERIOR WALL FRAMING TO ALIGN WITH EXTERIOR WALL FRAMING.
2. WALL FRAMING TO BE CENTERED ON GRIDLINE.
3. FIRE RATED COLUMN. WRAP WITH (2) LAYERS 5/8" GYPSUM BOARD.

REVISIONS	DATE

CSHQA
C.W. MOORE PLAZA
250 S. 5TH ST. BOISE, ID 83702
(208) 343-4635 FAX (208) 343-1858
http://www.cshqa.com

JOHN D. MAULIN, ARCHITECT
C.W. MOORE PLAZA
250 S. 5TH ST
BOISE, IDAHO
PHONE: 208-343-4635 FAX: 208-343-1858

THESE DRAWINGS AND SPECIFICATIONS, AS INSTRUMENTS OF SERVICE, ARE AND SHALL REMAIN THE PROPERTY OF THE ARCHITECT / ENGINEER WHETHER THE PROJECT FOR WHICH THEY ARE MADE IS EXECUTED OR NOT. THESE DRAWINGS AND SPECIFICATIONS SHALL NOT BE USED BY ANY PERSON OR ENTITY ON OTHER PROJECTS, FOR ADDITIONS TO THIS PROJECT, OR COMPLETION OF THIS PROJECT WHEN PHASED WITHOUT THE WRITTEN CONSENT OF CSHQA OR ITS AFFILIATES. Copyright ©2011

STAMP
LICENSED ARCHITECT AR-1706
JOHN D. MAULIN STATE OF IDAHO
DECEMBER 01, 2011
ORIGINAL DOCUMENT SIGNED BY ARCHITECT ON FILE WITH THE OWNER
ORIGINAL SIGNED BY: JOHN D. MAULIN
ORIGINAL DATE SIGNED: DECEMBER 01, 2011

CAD FILE NAME:
531-319_BA1.3.DWG

XREF FILE NAME:
531-319_xB_30X42TLBK.DWG
531-319_xB_BASE2.DWG
531-319_xWALL TYPES.DWG

DRAWING TITLE
SECOND FLOOR DIMENSION PLAN

APPROVED: CHIEF OF FACILITY MANAGEMENT SERVICE

APPROVED: MEDICAL CENTER DIRECTOR

PROJECT TITLE
BOISE VAMC
NEW EXTENDED CARE UNIT
BUILDING 'B' CLC

BUILDING NUMBER	CHECKED	DRAWN
122	DRD/JDM	TWM

LOCATION
VAMC BOISE, IDAHO

DATE
12/01/2011

PROJECT NO.
531-319

DRAWING NO.
BA1.3

DWG 06 OF 78

DEPARTMENT OF VETERANS AFFAIRS

Username: tmontgomery
Dec 05, 2011 - 1:48pm
Q:\2011\1101.01\Arch\02_Drawings\531-319_BA1.3.dwg

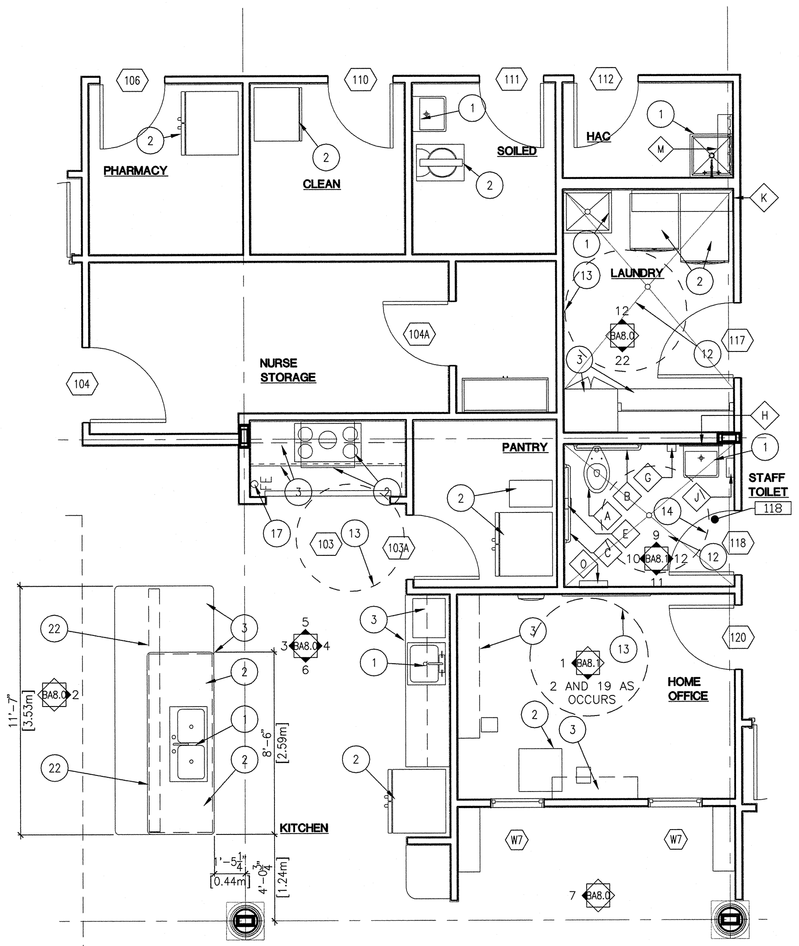

1 ENLARGED CORE ROOMS

0' 2' 4' 6' 8' 10' 12' SCALE: 1/4" = 1'-0"

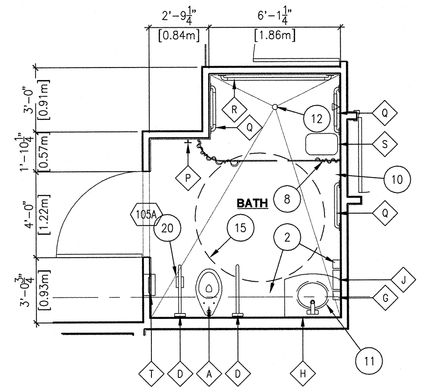

2 ENLARGED BATHROOM

0' 2' 4' 6' 8' 10' 12' SCALE: 1/4" = 1'-0"

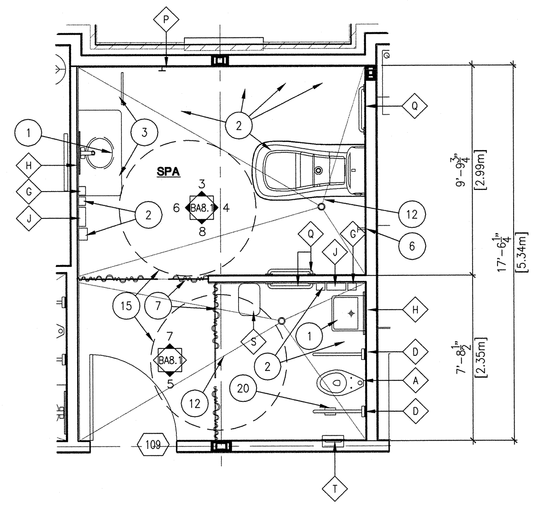

3 ENLARGED SPA PLAN

0' 2' 4' 6' 8' 10' 12' SCALE: 1/4" = 1'-0"

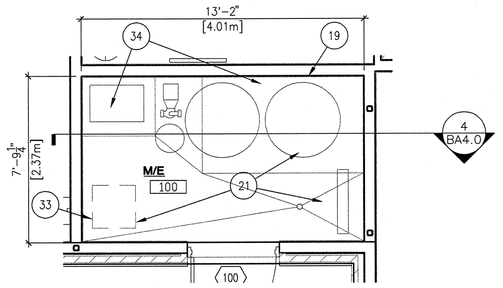

4 ENLARGED M/E PLAN

0' 2' 4' 6' 8' 10' 12' SCALE: 1/4" = 1'-0"

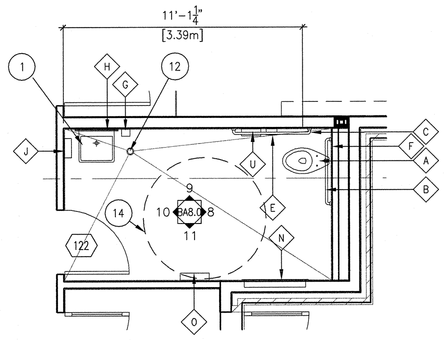

5 ENLARGED PUBLIC TOILET

0' 2' 4' 6' 8' 10' 12' SCALE: 1/4" = 1'-0"

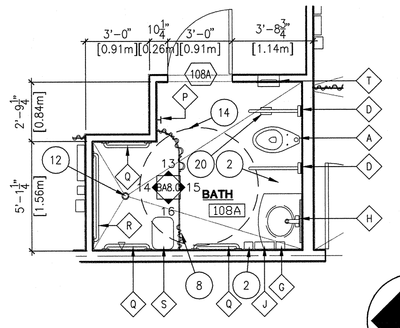

6 ENLARGED BATHROOM

0' 2' 4' 6' 8' 10' 12' SCALE: 1/4" = 1'-0"

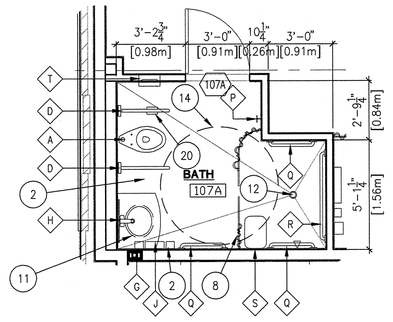

7 ENLARGED BATHROOM

0' 2' 4' 6' 8' 10' 12' SCALE: 1/4" = 1'-0"

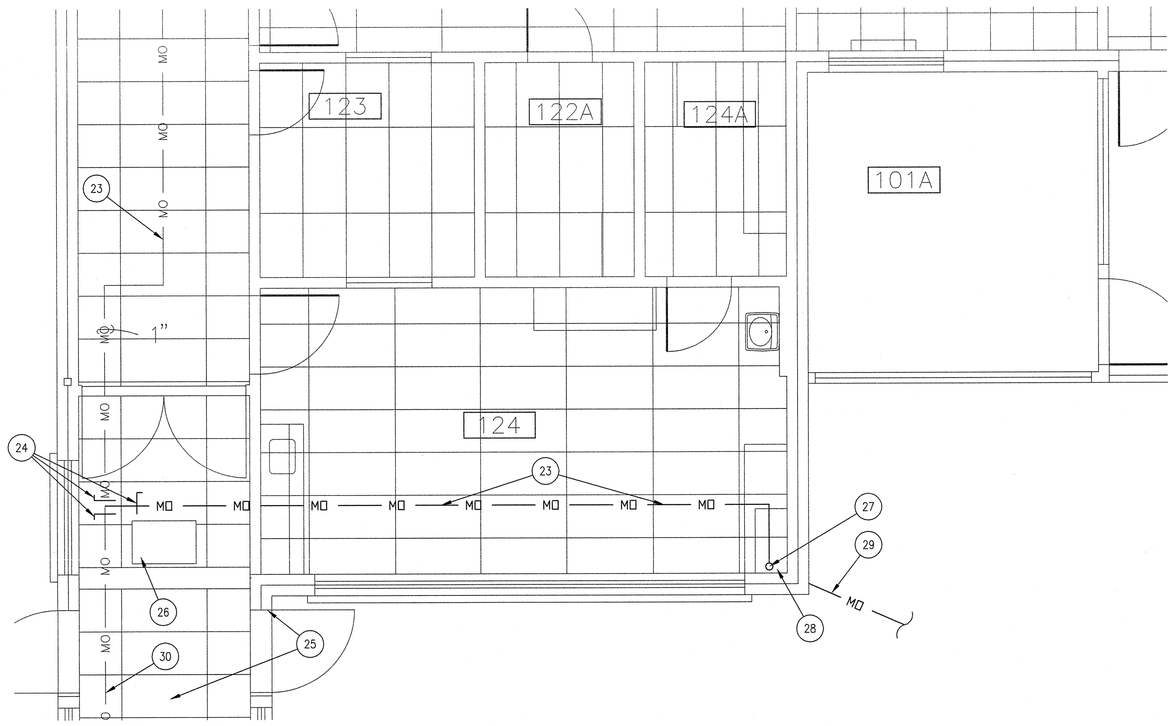

9 MEDICAL OXYGEN CONNECTION EXISTING TO NEW

0' 2' 4' 6' 8' 10' 12' SCALE: 1/4" = 1'-0"

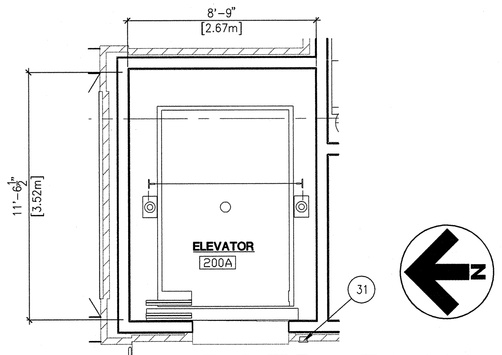

8 ENLARGED PLAN

0' 2' 4' 6' 8' 10' 12' SCALE: 1/4" = 1'-0"

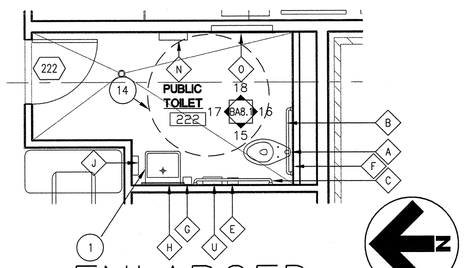

10 ENLARGED PUBLIC TOILET

0' 2' 4' 6' 8' 10' 12' SCALE: 1/4" = 1'-0"

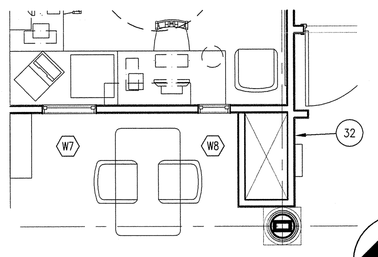

11 ENLARGED CORE-2ND FLR

0' 2' 4' 6' 8' 10' 12' SCALE: 1/4" = 1'-0"

GENERAL NOTES:

A. PARTITION DIMENSIONS ARE GIVEN TO THE FACE OF STUD UNLESS OTHERWISE NOTED.

B. MASONRY DIMENSIONS ARE GIVEN TO FACE OF MASONRY AND TO THE FACE OF ROUGH OPENINGS.

C. DOOR AND WINDOW OPENING LOCATIONS ARE DIMENSIONED TO ROUGH OPENING OR CENTERLINE OF OPENING. COORDINATE WITH DOOR SCHEDULE AND WINDOW TYPES, BA6.4 AND BA6.5.

D. IF A WALL TYPE IS NOT INDICATED ON A WALL, USE THE TYPICAL WALL TYPE AS NOTED. COORDINATE WITH FIRE/LIFE SAFETY PLAN, SHEET BG1.1.

E. CONTRACTOR SHALL PROVIDE BLOCKING OR BACKING FOR ALL WALL-MOUNTED ACCESSORIES AND EQUIPMENT. ASSURE THAT ALL REQUIRED BACKING IS INSTALLED IN WALLS PRIOR TO INSTALLING DRYWALL. THIS INCLUDES BACKING FOR WALL-MOUNTED DOORSTOPS.

F. ALL GYPSUM WALL BOARD TO BE TYPE 'X'. PROVIDE MOISTURE RESISTANT GYPSUM BOARD BEHIND CERAMIC WALL TILE, U.O.N.

G. GYPSUM WALL BOARD SHALL EXTEND FULL HEIGHT OF WALL TO UNDERSIDE OF DECK ABOVE UNLESS OTHERWISE NOTED. SEE WALL TYPES.

H. RE: BA6.0 AND BA6.1 FOR FINISHES.

J. RE: BA8.0-1 FOR ACCESSORY AND EQUIPMENT MOUNTING HEIGHTS.

K. SOME FURNISHINGS ARE SHOWN FOR COORDINATION.

SHEET NOTES:

1. SINK, CW/ PLUMBING.
2. EQUIPMENT/FURNITURE, RE: BA6.2 AND BA6.3.
3. MILLWORK, RE: BA8.0 INTERIOR ELEVATIONS.
4. RATED COULMN SURROUND, WRAP COLUMN IN (2) LAYERS 5/8" TYPE X GYPSUM BOARD.
5. V.V.-WALL MOUNTED CLOCK.
6. HOSE BIBB, RE: PLUMBING DRAWINGS.
7. PRIVACY CURTAIN.
8. SHOWER CURTAIN.
9. GATE ASSEMBLY WITH METAL PAINTED SIGN "AUTHORIZED PERSONNEL ONLY".
10. NURSE CALL, RE: TELECOMMUNICATION.
11. INTEGRAL SINK AND COUNTERTOP, RE: BA7.4-18 AND PLUMBING DRAWINGS.
12. SLOPED SLAB TO FLOOR DRAIN, RE: PLUMBING DRAWINGS.
13. DASHED CIRCLE INDICATES 5'-0"ø CLEAR TURNING AREA.
14. DASHED CIRCLE INDICATES 5'-6"ø CLEAR TURNING AREA.
15. DASHED CIRCLE INDICATES 6'-0"ø CLEAR TURNING AREA.
16. COLUMN, RE: STRUCTURAL.
17. SURFACE MOUNTED FIRE EXTINGUISHER.
18. NO NOTE PROVIDED.
19. PROVIDE SOLID CONTINUOUS BLOCKING FOR LENGTH OF WALL AT 5'-0"[1.52m] A.F.F. TO SECURE WATER TANK TO.
20. TOILET PAPER DISPENSER INTEGRAL WITH FOLD-UP GRAB BAR.
21. PLUMBING EQUIPMENT, RE: PLUMBING.
22. WALL ASSEMBLY BELOW COUNTER.
23. NEW MEDICAL OXYGEN LINE- RUN ABOVE CEILING, SUPPORT PIPING TO EXISTING STRUCTURE.
24. NEW VALVES.
25. EXISTING WALKWAY TO BE DEMOLISHED WHEN IMAGING BUILDING IS CONSTRUCTED. MEDICAL OXYGEN LINE IN CEILING TO BE RUN UNDERGROUND AT THAT TIME.
26. EXISTING MECHANICAL UNIT ABOVE CEILING.
27. DROP LINE IN CORNER OF ROOM. CONCEAL IN EXISTING CASEWORK. CONSTRUCT NEW P-LAM PANELS FIT TO EXISTING CASEWORK AND TRIM TO FULLY CONCEAL NEW PIPING.
28. CORE DRILL EXISTING CONCRETE AS REQUIRED FOR NEW PIPING.
29. NEW PIPING RUN SUB-SURFACE TO SERVE NEW CLC BUILDING.
30. EXISTING MEDICAL OXYGEN LINE TO REMAIN AND BE PROTECTED.
31. LOCATION OF ELEVATOR CALL BUTTON.
32. DUCTWORK, CHASE. RE: MECHANICAL.
33. DASHED LINES INDICATE AREA DESIGNATEDFOR FIRE RISER / ACKFLOW PREVENTER.
34. CONCRETE HOUSEKEEPING PAD, COORDINATE WITH STRUCTURAL AND PLUMBING.

FIXTURE LEGEND:

COORDINATE WITH BA8.0-1 FOR ADDTIONAL INFORMATION

A. WATER CLOSET, CW/ PLUMBING
B. 36" STAINLESS STEEL GRAB BAR
C. 42" STAINLESS STEEL GRAB BAR
D. FOLD-UP STAINLESS STEEL GRAB BAR
E. TOILET PAPER DISPENSER (V.C.)
F. SEAT COVER DISPENSER (V.C.)
G. SOAP DISPENSER (V.C.)
H. MIRROR
J. PAPER TOWEL DISPENSER (V.C.)
K. 5'-0" WIDE x 12" DEEP STAINLESS STEEL SHELF
L. SEMI-RECESSED FIRE EXTINGUISHER CABINET
M. SHELF WITH MOP AND BROOM HOLDERS AND HOOKS
N. SURFACE-MOUNTED BABY CHANGING STATION (V.C.)
O. SURFACE-MOUNTED SANITARY NAPKIN DISPENSER (V.C.)
P. ROBE HOOK
Q. 24" STAINLESS STEEL GRAB BAR
R. 48" STAINLESS STEEL GRAB BAR
S. FOLD-UP SHOWER SEAT
T. SEMI-RECESSED SANITARY NAPKIN DISPENSER (V.C.)
U. NAPKIN DISPOSAL (V.C.)

REVISIONS | DATE

CSHQA
C.W. MOORE PLAZA
250 S. 5TH ST. BOISE, ID 83702
(208) 343-4635 FAX (208) 343-1858
http://www.cshqa.com

JOHN D. MAULIN, ARCHITECT
C.W. MOORE PLAZA
250 S. 5TH ST
BOISE, IDAHO
PHONE: 208-343-4635 FAX: 208-343-1858

THESE DRAWINGS AND SPECIFICATIONS, AS INSTRUMENTS OF SERVICE, ARE AND SHALL REMAIN THE PROPERTY OF THE ARCHITECT / ENGINEER WHETHER THE PROJECT FOR WHICH THEY ARE MADE IS EXECUTED OR NOT. THESE DRAWINGS AND SPECIFICATIONS SHALL NOT BE USED BY ANY PERSON OR ENTITY ON OTHER PROJECTS, FOR ADDITIONS TO THIS PROJECT, OR FOR COMPLETION OF THIS PROJECT WHEN PHASED WITHOUT THE WRITTEN CONSENT OF CSHQA OR ITS AFFILIATES. Copyright ©2011

STAMP
LICENSED ARCHITECT AR.1706
JOHN D. MAULIN STATE OF IDAHO
DECEMBER 01, 2011
ORIGINAL DOCUMENT SIGNED BY ARCHITECT ON FILE WITH THE OWNER
ORIGINAL SIGNED BY: JOHN D. MAULIN
ORIGINAL DATE SIGNED: DECEMBER 01, 2011

CAD FILE NAME: 531-319_BA1.4.DWG

XREF FILE NAME:
531-319_xB_30X42TLBK.DWG
531-319_xB_BASE1.DWG
53-319_xFIXT LGND.DWG
531-319_xB_BASE2.DWG
88P1MG.DWG
x88a1.DWG

DRAWING TITLE: ENLARGED FLOOR PLANS

APPROVED: CHIEF OF FACILITY MANAGEMENT SERVICE

APPROVED: MEDICAL CENTER DIRECTOR

PROJECT TITLE: BOISE VAMC NEW EXTENDED CARE UNIT BUILDING 'B' CLC

BUILDING NUMBER: 122 | CHECKED: DRD/JDM | DRAWN: TWM

LOCATION: VAMC BOISE, IDAHO

DATE: 12/01/2011
PROJECT NO. 531-319
DRAWING NO. BA1.4
DWG 07 OF 78

DEPARTMENT OF VETERANS AFFAIRS

Username: tmonghomery
Dec 05, 2011 - 2:15pm
Q:\2010\10101.0\Arch\02_Drawings\531-319_BA1.4.dwg

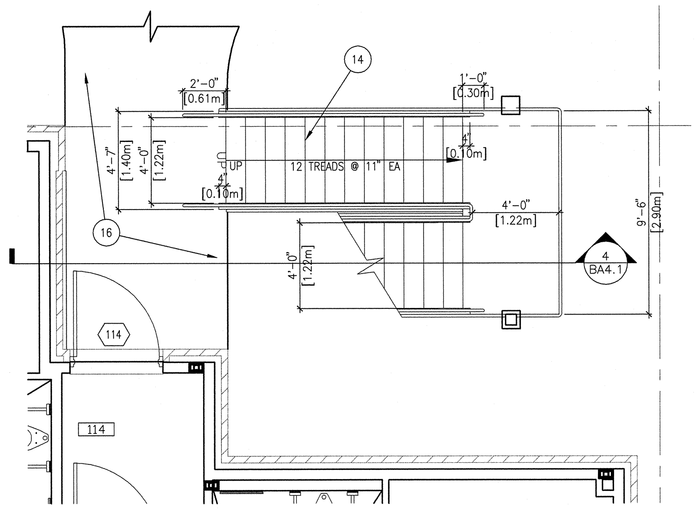

1 ENLARGED STAIR PLAN 1ST FLOOR

0' 2' 4' 6' 8' 10' 12' SCALE: 1/4" = 1'-0"

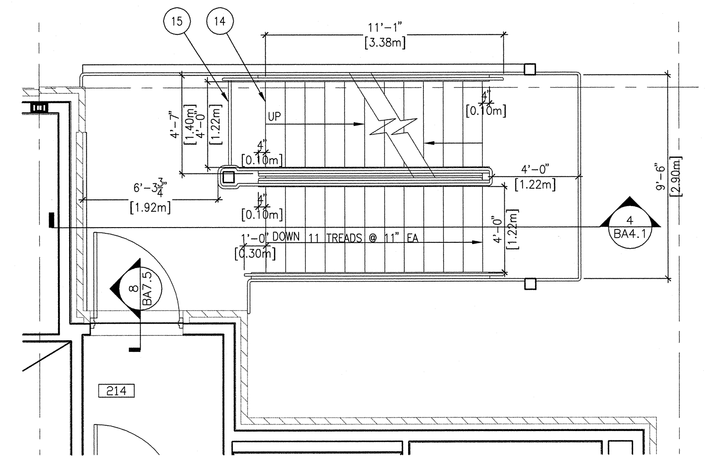

2 ENLARGED STAIR PLAN 2ND FLOOR

0' 2' 4' 6' 8' 10' 12' SCALE: 1/4" = 1'-0"

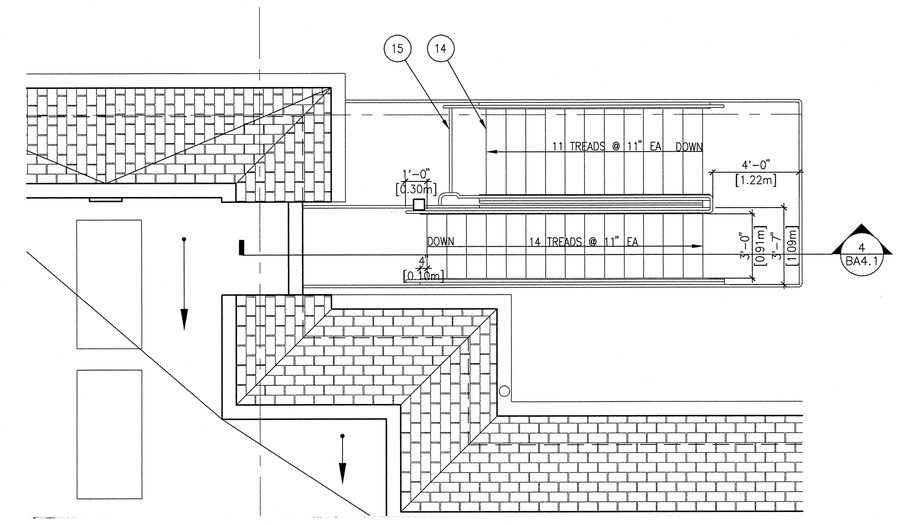

3 ENLARGED STAIR PLAN ROOF

0' 2' 4' 6' 8' 10' 12' SCALE: 1/4" = 1'-0"

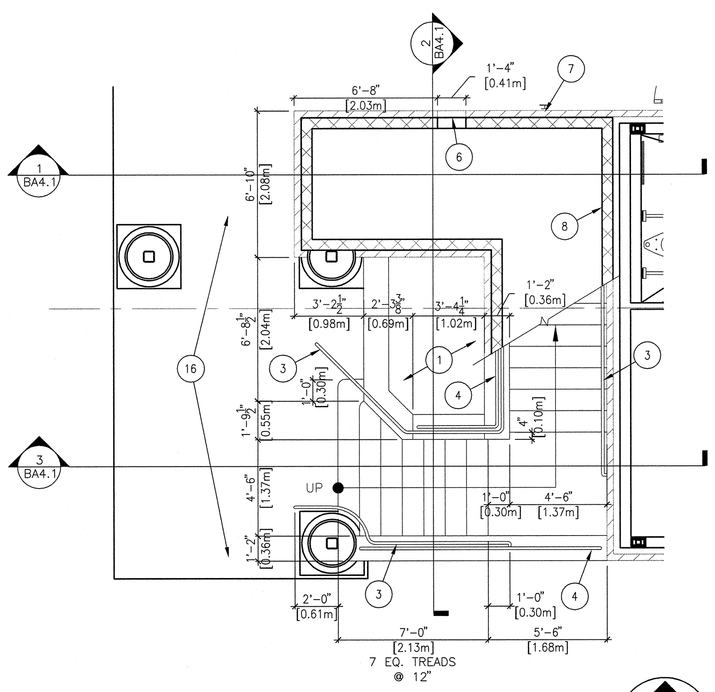

4 ENLARGED STAIR PLAN 1ST FLOOR

0' 2' 4' 6' 8' 10' 12' SCALE: 1/4" = 1'-0"

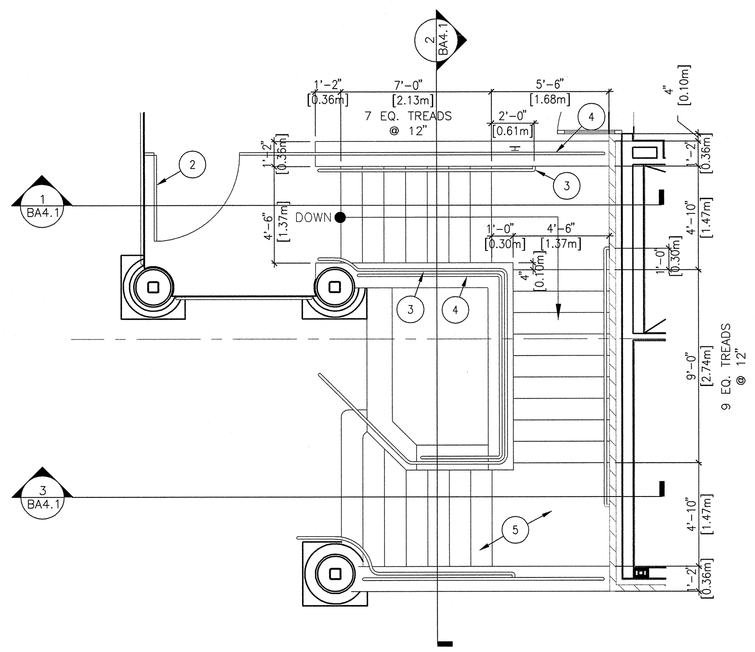

5 ENLARGED STAIR PLAN 2ND FLOOR

0' 2' 4' 6' 8' 10' 12' SCALE: 1/4" = 1'-0"

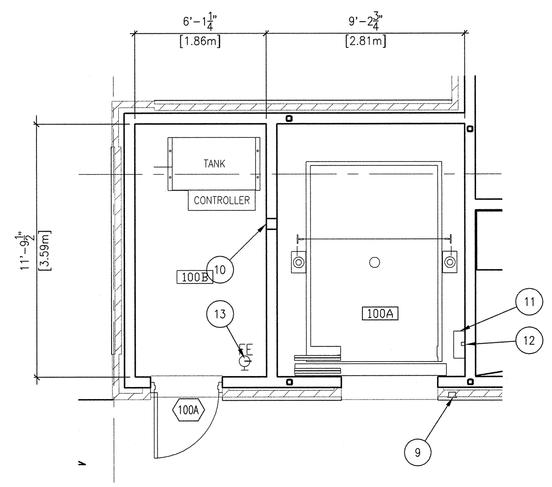

6 ENLARGED ELEVATOR AND CONTROL ROOM

0' 2' 4' 6' 8' 10' 12' SCALE: 1/4" = 1'-0"

GENERAL NOTES:

A. PARTITION DIMENSIONS ARE GIVEN TO THE FACE OF STUD UNLESS OTHERWISE NOTED.

B. MASONRY DIMENSIONS ARE GIVEN TO FACE OF MASONRY AND TO THE FACE OF ROUGH OPENINGS.

C. DOOR AND WINDOW OPENING LOCATIONS ARE DIMENSIONED TO ROUGH OPENING OR CENTERLINE OF OPENING. COORDINATE WITH DOOR SCHEDULE AND WINDOW TYPES, BA6.4 AND BA6.5.

D. IF A WALL TYPE IS NOT INDICATED ON A WALL, USE THE TYPICAL WALL TYPE AS NOTED. COORDINATE WITH FIRE/LIFE SAFETY PLAN, SHEET BG1.1.

E. CONTRACTOR SHALL PROVIDE BLOCKING OR BACKING FOR ALL WALL-MOUNTED ACCESSORIES AND EQUIPMENT. ASSURE THAT ALL REQUIRED BACKING IS INSTALLED IN WALLS PRIOR TO INSTALLING DRYWALL. THIS INCLUDES BACKING FOR WALL-MOUNTED DOORSTOPS.

F. ALL GYPSUM WALL BOARD TO BE TYPE 'X'. PROVIDE MOISTURE RESISTANT GYPSUM BOARD BEHIND CERAMIC WALL TILE, U.O.N.

G. GYPSUM WALL BOARD SHALL EXTEND FULL HEIGHT OF WALL TO UNDERSIDE OF DECK ABOVE UNLESS OTHERWISE NOTED. SEE WALL TYPES.

H. RE: BA6.0 AND BA6.1 FOR FINISHES.

J. RE: BA8.0-1 FOR ACCESSORY AND EQUIPMENT MOUNTING HEIGHTS.

K. SOME FURNISHINGS ARE SHOWN FOR COORDINATION.

SHEET NOTES:

1. PLANTER.
2. 4' [1.219m] WIDE GATE.
3. 1 1/2" [0.038m] DIA. HANDRAIL.
4. GUARDRAIL CENTERED ON 15" [0.381m] WIDE X 3" [0.076m] HIGH PRECAST CONCRETE CAP. SPACE JOINTS EQUALLY ALONG LENGTH AS REQUIRED.
5. CONCRETE STAIRS WITH SLIP RESISTANT NOSING ON GALV. METAL DECK AND LEDGER ANGLES, CW/ STRUCTURAL. PROVIDE 2% MAX. SLOPE AT ALL TREADS AND LANDINGS TO PREVENT THE ACCUMULATION OF WATER ON WALKING SURFACES. CW/ CIVIL GRADING PLAN.
6. 8" [0.203m] X16" [0.406m] LOUVERED VENTS WITH INSECT SCREEN LOCATED AT 16" [0.406m] AND 96" [2.438m] A.F.F. TO TOP OF VENT.
7. BRICK VENEER OVER 6" [0.152m] CMU.
8. 6" [0.152m] CMU STAIR SUPPORT, CW/ STRUCTURAL.
9. LOCATION OF ELEVATOR CALL BUTTON.
10. (2) 6"x6"[0.152mx0.152m] CUT-OUTS, COORDINATE LOCATIONS WITH ELEVATOR MACHINE ROOM LAYOUT.
11. ACCESS LADDER TO EXTEND 4'-0" ABOVE FINISH FLOOR.
12. LIGHT SWITCH, CW/ ELECTRICAL.
13. SURFACE-MOUNTED FIRE EXTINGUISHER, COORDINATE LOCATION WITH ELEVATOR EQUIPMENT LAYOUT.
14. GALVANIZED EXTERIOR STEEL STAIR ASSEMBLY.
15. STEEL GATE ASSEMBLY, RE: BA7.1-16 SIM. WITH METAL PAINTED SIGN "AUTHORIZED PERSONNEL ONLY".
16. CONCRETE SLAB, RE: CIVIL.

Username: tmontgomery
Dec 05, 2011 - 2:03pm
Q:\2010\10101\Arch\02_Drawings\531-319_BA1.5.dwg

REVISIONS	DATE

CSHQA

C.W. MOORE PLAZA
250 S. 5TH ST. BOISE, ID 83702
(208) 343-4635 FAX (208) 343-1858
http://www.cshqa.com

JOHN D. MAULIN, ARCHITECT
C.W. MOORE PLAZA
250 S. 5TH ST
BOISE, IDAHO
PHONE: 208-343-4635 FAX: 208-343-1858

THESE DRAWINGS AND SPECIFICATIONS, AS INSTRUMENTS OF SERVICE, ARE AND SHALL REMAIN THE PROPERTY OF THE ARCHITECT / ENGINEER WHETHER THE PROJECT FOR WHICH THEY ARE MADE IS EXECUTED OR NOT. THESE DRAWINGS AND SPECIFICATIONS SHALL NOT BE USED BY ANY PERSON OR ENTITY ON OTHER PROJECTS, FOR ADDITIONS TO THIS PROJECT, OR COMPLETION OF THIS PROJECT WHEN PHASED WITHOUT THE WRITTEN CONSENT OF CSHQA OR ITS AFFILIATES. Copyright ©2011

STAMP
LICENSED ARCHITECT AR.1706
JOHN D. MAULIN STATE OF IDAHO
DECEMBER 01, 2011
ORIGINAL DOCUMENT SIGNED BY ARCHITECT ON FILE WITH THE OWNER
ORIGINAL SIGNED BY: JOHN D. MAULIN
ORIGINAL DATE SIGNED: DECEMBER 01, 2011

CAD FILE NAME: 531-319_BA1.5.DWG

XREF FILE NAME:
531-319_xB_30X42TLBK.DWG
531-319_xB_BASE1.DWG
531-319_xB_BASE2.DWG
531-319_xB_ROOF PLAN.DWG

DRAWING TITLE: ENLARGED FLOOR PLANS

PROJECT TITLE: BOISE VAMC NEW EXTENDED CARE UNIT BUILDING 'B' CLC

DATE: 12/01/2011

PROJECT NO.: 531-319

APPROVED: CHIEF OF FACILITY MANAGEMENT SERVICE

BUILDING NUMBER: 122 | CHECKED: DRD/JDM | DRAWN: TWM

DRAWING NO.: BA1.5

APPROVED: MEDICAL CENTER DIRECTOR

LOCATION: VAMC BOISE, IDAHO

DWG 08 OF 78

DEPARTMENT OF VETERANS AFFAIRS

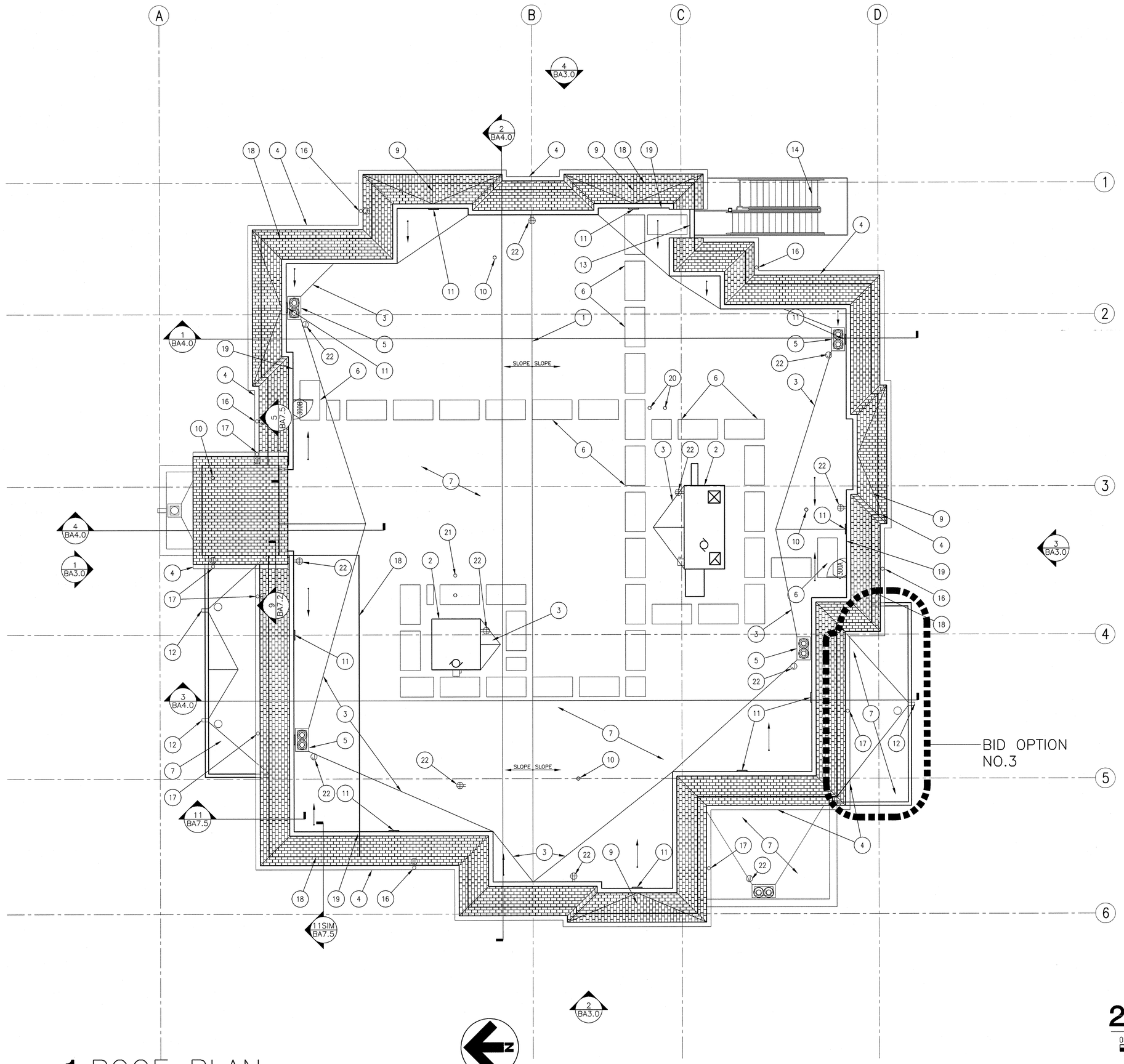

1 ROOF PLAN

0' 4' 8' 12' 16' 20' 24'

SCALE: 1/8" = 1'-0"

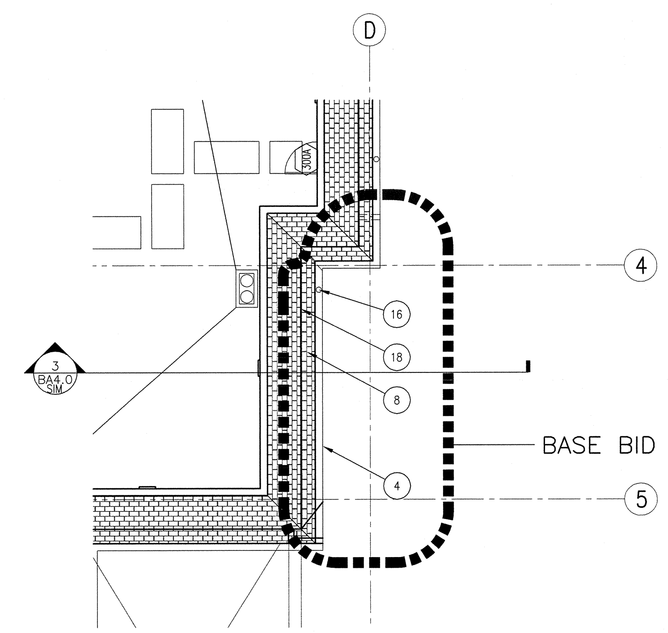

2 PARTIAL ROOF PLAN

0' 4' 8' 12' 16' 20' 24'

SCALE: 1/8" = 1'-0"

GENERAL NOTES:

A. ROOF TO HAVE ½" PER FOOT SLOPE UNLESS NOTED OTHERWISE. CONTRACTOR TO VERIFY THAT ALL ROOF SURFACES HAVE POSITIVE DRAINAGE PRIOR TO INSTALLATION OF SINGLE PLY ROOF MEMBRANE.

B. REFER TO STRUCTURAL FOR BEARING ELEVATIONS.

C. ALL TAPERED INSULATION BOARDS TO BE POLYISOCYANURATE UNLESS NOTED OTHERWISE.

D. COORDINATE ALL ROOF PENETRATION LOCATIONS AND REQUIREMENTS WITH MECHANICAL, PLUMBING, AND ELECTRICAL DRAWINGS. PROVIDE FLASHING AND COUNTER FLASHING PER CONTRACT DOCUMENTS AND MANUFACTURER'S REQUIREMENTS.

E. THE CONTRACTOR SHALL VERIFY THAT ROOF DRAIN LOCATIONS INDICATED DO NOT INTERFERE WITH STRUCTURAL MEMBERS. IF A ROOF DRAIN LOCATION INDICATED INTERFERES WITH STRUCTURAL MEMBERS, CONTACT THE ARCHITECT IMMEDIATELY FOR DIRECTION PRIOR TO PROCEEDING WITH THE WORK.

F. THE CONTRACTOR SHALL PROVIDE TAPERED RIGID INSULATION CRICKETS AROUND ANY EQUIPMENT OR ANY OTHER ROOF MOUNTED ITEMS WHICH MAY OBSTRUCT THE FLOW OF NORMAL WATER DRAINAGE.

G. PROVIDE PROTECTION PADS ON SINGLE PLY ROOFING AT SERVICE SIDE OF ALL ROOF TOP EQUIPMENT.

H. COORDINATE ALL ROOF MOUNTED EQUIPMENT CURBS WITH STRUCTURAL AND MECHANICAL DRAWINGS.

J. REFERENCE SECTIONS FOR ADDITIONAL DETAILS.

SHEET NOTES:

1. RIDGE LINE, CW/BA4.0 BUILDINGS SECTIONS.
2. ROOFTOP MECHANICAL EQUIPMENT. RE: BA7.2–13, CW/ MECHANICAL.
3. ROOF CRICKET.
4. GUTTER, RE: BA7.2–5.
5. ROOF DRAIN AND OVERFLOW DRAIN, RE: BA7.2–11.
6. ROOF PAD, RE: BA7.1–19.
7. SINGLE PLY ROOF MEMBRANE, RE: BA7.1–19.
8. MANSARD ROOF WITH ASPHALT SHINGLES, RE: BA7.2–4.
9. GABLE ROOF OVERBUILD WITH ASPHALT SHINGLES, RE: BA7.1–18.
10. VENT THROUGH ROOF. RE: BA7.2–10, CW/PLUBMING.
11. WALL LOUVER. RE: BA7.2–7.
12. THROUGH WALL SCUPPER. RE: BA7.2–2.
13. CURB AT ROOF, RE: BA7.2–1.
14. STEEL STAIR ASSEMBLY BELOW.
15. STEEL GATE ASSEMLBY BELOW.
16. DOWNSPOUT/RAINWATER COLLECTOR ASSEMBLY. RE: BA7.2–3.
17. DOWNSPOUT ONLY ONTO LOWER ROOF.
18. EXTERIOR WALL BELOW.
19. COPING CAP.
20. DRYER VENT, RE: MECHANICAL.
21. ROOF MOUNTED HOSE BIBB, CW/PLUMBING.
22. ROOF TOP ELECTRICAL RECEPTACLE, RE: ELECTRICAL.

LEGEND:

LINE INDICATES NEW CONSTRUCTION

LINE INDICATES FACE OF WALL BELOW

ASPHALT SHINGLE

Username: tmontgomery
Dec 05, 2011 – 2:05pm
Q:\2010\101010\Arch\02_Drawings\531-319_BA2.0.dwg

REVISIONS	DATE

CSHQA

C.W. MOORE PLAZA
250 S. 5TH ST. BOISE, ID 83702
(208) 343-4635 FAX (208) 343-1858
http://www.cshqa.com

JOHN D. MAULIN, ARCHITECT

C.W. MOORE PLAZA
250 S. 5TH ST
BOISE, IDAHO
PHONE: 208-343-4635 FAX: 208-343-1858

THESE DRAWINGS AND SPECIFICATIONS, AS INSTRUMENTS OF SERVICE, ARE AND SHALL REMAIN THE PROPERTY OF THE ARCHITECT / ENGINEER WHETHER THE PROJECT FOR WHICH THEY ARE MADE IS EXECUTED OR NOT. THESE DRAWINGS AND SPECIFICATIONS SHALL NOT BE USED BY ANY PERSON OR ENTITY ON OTHER PROJECTS, FOR ADDITIONS TO THIS PROJECT, OR COMPLETION OF THIS PROJECT WHEN PHASED-WITHOUT THE WRITTEN CONSENT OF CSHQA OR ITS AFFILIATES. Copyright ©2011

STAMP

LICENSED ARCHITECT AR-1706
JOHN D. MAULIN
STATE OF IDAHO
DECEMBER 01, 2011

ORIGINAL DOCUMENT SIGNED BY ARCHITECT ON FILE WITH THE OWNER
ORIGINAL SIGNED BY: JOHN D. MAULIN
ORIGINAL DATE SIGNED: DECEMBER 01, 2011

CAD FILE NAME:
531-319_BA2.0.dwg

XREF FILE NAME:
531-319_xB_30X42TLBK.DWG
531-319_xB_Roof Plan.DWG
531-319_BM2.3.DWG
531-319_BP2.4.DWG
531-319_BE2.7.DWG

DRAWING TITLE
ROOF PLAN

APPROVED: CHIEF OF FACILITY MANAGEMENT SERVICE

APPROVED: MEDICAL CENTER DIRECTOR

PROJECT TITLE
BOISE VAMC
NEW EXTENDED CARE UNIT
BUILDING 'B' CLC

BUILDING NUMBER	CHECKED	DRAWN
122	DRD/JDM	TWM

LOCATION
VAMC BOISE, IDAHO

DATE
12/01/2011

PROJECT NO.
531-319

DRAWING NO.
BA2.0

DWG 09 OF 78

DEPARTMENT OF VETERANS AFFAIRS