1ST FLOOR DOOR SCHEDULE

DOOR NUMBER	ROOM NAME	DOOR SIZE TYPE	DOOR SIZE WIDTH	DOOR SIZE HEIGHT	DOOR SIZE THICKNESS	DOOR MATERIAL	DOOR GLAZING	DOOR FINISH / FACING	FRAME TYPE	FRAME MATERIAL	FRAME FINISH	FIRE RATING	HARDWARE GROUP	DETAILS THRESHOLD	DETAILS JAMB	DETAILS HEAD	DOOR REMARKS
100	MECHANICAL/ELECTRICAL	D1	4'-0" (1219.2MM)	7'-0" (2133.6MM)	13/4"(44.5)	HM	-	PT	F1	HM	PT	-	8	BA7.0-17	BA7.0-18	BA7.0-16	
100A	ELEVATOR CONTROL ROOM	D1	3'-0" (914.4MM)	7'-0" (2133.6MM)	13/4"(44.5)	HM	-	PT	F1	HM	PT	-	6	BA7.0-17	BA7.0-18	BA7.0-16	
101	VESTIBULE	PAIR D2	3'-0" (914.4MM)	7'-0" (2133.6MM)	21/4"(57.2)	AL/WD	GL1	FF/ST	F1	HM	PT	-	12	BA7.0-14	BA7.0-15	BA7.0-16	2,7,8,11,12
101A	VESTIBULE	PAIR D2	3'-0" (914.4MM)	7'-0" (2133.6MM)	21/4"(57.2)	WD	GL2	ST	F1	HM	PT	-	7	-	BA7.2-18	BA7.2-19	6,7,8,11,12
103	KITCHEN	D7	5'-8" (1727.2MM)	7'-0" (2133.6MM)	5/8"(15.8)	SS	-	FF	-	STL	PT	60 MIN	11	-	BA7.5-6	BA7.5-2	3
103A	PANTRY	D3	3'-0" (914.4MM)	7'-0" (2133.6MM)	13/4"(44.5)	WD	-	PT	F1	HM	PT	-	15	-	BA7.2-18	BA7.2-19	9
104	NURSE STORAGE	D3	3'-6" (1066.8MM)	7'-0" (2133.6MM)	13/4"(44.5)	WD	-	PT	F1	HM	PT	-	22	-	BA7.2-18	BA7.2-19	9, 11
104A	NURSE CLEAN STORAGE	D3	3'-0" (914.4MM)	7'-0" (2133.6MM)	13/4"(44.5)	WD	-	PT	F1	HM	PT	-	4	-	BA7.2-18	BA7.2-19	10
105	S.C. BEDROOM	D4	6'-0" (1828.8MM)	7'-0" (2133.6MM)	13/4"(44.5)	WD	-	PT	F1	HM	PT	-	20	-	BA7.2-18	BA7.2-19	
105A	S.C. BATH	D3	4'-0" (1219.2MM)	8'-0" (2438.4MM)	13/4"(44.5)	WD	-	PT	F3	HM	PT	-	17	-	BA7.2-18	BA7.2-19	4, 7
106	PHARMACY	D3	3'-6" (1066.8MM)	7'-0" (2133.6MM)	13/4"(44.5)	WD	-	PT	F1	HM	PT	-	22	-	BA7.2-18	BA7.2-19	9, 11
107	BEDROOM	D4	4'-0" (1219.2MM)	7'-0" (2133.6MM)	13/4"(44.5)	WD	-	PT	F1	HM	PT	-	20	-	BA7.2-18	BA7.2-19	
107A	BATH	D3	3'-0" (1219.2MM)	8'-0" (2438.4MM)	13/4"(44.5)	WD	-	PT	F3	HM	PT	-	17	-	BA7.2-18	-	4, 7
108	BEDROOM	D3	4'-0" (1219.2MM)	7'-0" (2133.6MM)	13/4"(44.5)	WD	-	PT	F1	HM	PT	-	14	-	BA7.2-18	BA7.2-19	
108A	BATH	D3	3'-0" (1219.2MM)	8'-0" (2438.4MM)	13/4"(44.5)	WD	-	PT	F3	HM	PT	-	17	-	BA7.2-18	-	4, 7
109	SPA	D3	4'-0" (1219.2MM)	7'-0" (2133.6MM)	13/4"(44.5)	WD	-	PT	F1	HM	PT	-	1	-	BA7.2-18	BA7.2-19	7
110	CLEAN	D3	3'-0" (914.4MM)	7'-0" (2133.6MM)	13/4"(44.5)	WD	-	PT	F1	HM	PT	-	21	-	BA7.2-18	BA7.2-19	9, 11
111	SOILED	D3	3'-0" (914.4MM)	7'-0" (2133.6MM)	13/4"(44.5)	WD	-	PT	F1	HM	PT	45 MIN	21	BA7.2-17	BA7.2-18	BA7.2-19	9, 11
112	HAC	D3	3'-0" (914.4MM)	7'-0" (2133.6MM)	13/4"(44.5)	WD	-	PT	F1	HM	PT	-	5	BA7.2-17	BA7.2-18	BA7.2-19	9
113	BEDROOM	D3	4'-0" (1219.2MM)	7'-0" (2133.6MM)	13/4"(44.5)	WD	-	PT	F1	HM	PT	-	14	-	BA7.2-18	BA7.2-19	
113A	BATH	D3	3'-0" (1219.2MM)	8'-0" (2438.4MM)	13/4"(44.5)	WD	-	PT	F3	HM	PT	-	17	-	BA7.2-18	-	4, 7
114	VESTIBULE	D5	4'-0" (1219.2MM)	7'-0" (2133.6MM)	13/4"(44.5)	HM	GL1	PT	F1	HM	PT	60 MIN	10	BA7.0-14	BA7.0-15	BA7.0-16	7, 11
114A	VESTIBULE	D2	4'-0" (1219.2MM)	7'-0" (2133.6MM)	21/4"(57.2)	WD	GL2	ST	F1	HM	PT	-	15	-	BA7.2-18	BA7.2-19	7, 11
115	BEDROOM	D3	4'-0" (1219.2MM)	7'-0" (2133.6MM)	13/4"(44.5)	WD	-	PT	F1	HM	PT	-	14	-	BA7.2-18	BA7.2-19	
115A	BATH	D3	3'-0" (1219.2MM)	8'-0" (2438.4MM)	13/4"(44.5)	WD	-	PT	F3	HM	PT	-	17	-	BA7.2-18	-	4, 7
116	BEDROOM	D3	4'-0" (1219.2MM)	7'-0" (2133.6MM)	13/4"(44.5)	WD	-	PT	F1	HM	PT	-	14	-	BA7.2-18	BA7.2-19	
116A	BATH	D3	3'-0" (1219.2MM)	8'-0" (2438.4MM)	13/4"(44.5)	WD	-	PT	F3	HM	PT	-	17	-	BA7.2-18	-	4, 7
117	LAUNDRY	D3	3'-0" (914.4MM)	7'-0" (2133.6MM)	13/4"(44.5)	WD	-	PT	F1	HM	PT	45 MIN	16	BA7.2-17	BA7.2-18	BA7.2-19	
118	STAFF TOILET	D3	3'-0" (914.4MM)	7'-0" (2133.6MM)	13/4"(44.5)	WD	-	PT	F1	HM	PT	-	1	-	BA7.2-18	BA7.2-19	7
120	HOME OFFICE	D6	3'-0" (914.4MM)	7'-0" (2133.6MM)	13/4"(44.5)	WD	GL4	PT	F1	HM	PT	-	2	-	BA7.2-18	BA7.2-19	7
121	BEDROOM	D3	4'-0" (1219.2MM)	7'-0" (2133.6MM)	13/4"(44.5)	WD	-	PT	F1	HM	PT	-	14	-	BA7.2-18	BA7.2-19	
121A	BATH	D3	3'-0" (1219.2MM)	8'-0" (2438.4MM)	13/4"(44.5)	WD	-	PT	F3	HM	PT	-	17	-	BA7.2-18	-	4, 7
122	PUBLIC TOILET	D3	3'-0" (914.4MM)	7'-0" (2133.6MM)	13/4"(44.5)	WD	-	PT	F1	HM	PT	-	18	-	BA7.2-18	BA7.2-19	7
123	VESTIBULE	PAIR D2	3'-0" (914.4MM)	7'-0" (2133.6MM)	21/4"(57.2)	AL/WD	GL1	FF/ST	F1	HM	PT	-	12	BA7.0-14	BA7.0-15	BA7.0-16	2,7,8,11,12
123A	VESTIBULE	PAIR D2	3'-0" (914.4MM)	7'-0" (2133.6MM)	21/4"(57.2)	WD	GL2	ST	F1	HM	PT	-	7	-	BA7.2-18	BA7.2-19	6,7,8,11,12
124	DEN	D6	3'-0" (914.4MM)	7'-0" (2133.6MM)	13/4"(44.5)	WD	GL4	PT	F1	HM	PT	-	19	-	BA7.2-18	BA7.2-19	7
125	HOME GYM	D6	3'-6" (1066.8MM)	7'-0" (2133.6MM)	13/4"(44.5)	WD	GL4	PT	F1	HM	PT	-	3	-	BA7.2-18	BA7.2-19	7
126	BEDROOM	D3	4'-0" (1219.2MM)	7'-0" (2133.6MM)	13/4"(44.5)	WD	-	PT	F1	HM	PT	-	14	-	BA7.2-18	BA7.2-19	
126A	BATH	D3	3'-0" (1219.2MM)	8'-0" (2438.4MM)	13/4"(44.5)	WD	-	PT	F3	HM	PT	-	17	-	BA7.2-18	-	4, 7
127	BEDROOM	D3	4'-0" (1219.2MM)	7'-0" (2133.6MM)	13/4"(44.5)	WD	-	PT	F1	HM	PT	-	14	-	BA7.2-18	BA7.2-19	
127A	BATH	D3	3'-0" (1219.2MM)	8'-0" (2438.4MM)	13/4"(44.5)	WD	-	PT	F3	HM	PT	-	17	-	BA7.2-18	-	4, 7
128	BEDROOM	D3	4'-0" (1219.2MM)	7'-0" (2133.6MM)	13/4"(44.5)	WD	-	PT	F1	HM	PT	-	20	-	BA7.2-18	BA7.2-19	
128A	BATH	D3	3'-0" (1219.2MM)	8'-0" (2438.4MM)	13/4"(44.5)	WD	-	PT	F3	HM	PT	-	17	-	BA7.2-18	-	4, 7
C11	CORRIDOR	PAIR D3	3'-6" (1066.8MM)	7'-0" (2133.6MM)	13/4"(44.5)	WD	-	PT	F2	HM	PT	20 MIN	9	-	BA7.2-18	BA7.2-19	1,11,13
C13	CORRIDOR	PAIR D3	3'-6" (1066.8MM)	7'-0" (2133.6MM)	13/4"(44.5)	WD	-	PT	F2	HM	PT	20 MIN	9	-	BA7.2-18	BA7.2-19	1,11,13

GENERAL NOTES:

A. COORDINATE ALL DOORS AND WINDOWS WITH THE FLOOR PLANS AND EXTERIOR ELEVATIONS.
B. FIELD VERIFY ALL DIMENSIONS PRIOR TO FABRICATION.
C. EXTERIOR WINDOW TYPES ARE SHOWN FROM THE OUTSIDE.
D. ALUMINUM CLAD WOOD WINDOWS AND DOORS FINISH TO MATCH MARVIN WINDOWS COCONUT CREAM, UNLESS NOTED OTHERWISE.

DOOR REMARKS

1. SMOKE BARRIER.
2. ALUMINUM CLAD WOOD DOOR.
3. OVERHEAD COILING FIRE DOOR, MANUAL, FUSABLE LINK.
4. HOLLOW METAL FRAME JAMBS TO EXTEND TO CEILING, NO HEAD PROVIDED TO ALLOW PASSAGE OF PATIENT LIFT.
5. FOUR SIDED DOOR FRAME.
6. WOOD DOOR SIMILAR TO NOTE 2 ABOVE, EXCEPT NO ALUMINUM CLADDING.
7. DOOR THRESHOLD, RE: AA6.0.
8. INTERNAL RODS, NOT REQUIRING REMOVABLE MULLIONS.
9. WOOD TRIM ON PUBLIC SIDE ONLY.
10. NO WOOD TRIM EITHER SIDE OF OPENING.
11. PROVIDE ELECTRIFIED HARDWARE, CW/ SPECIFICATIONS AND ELECTRICAL DRAWINGS.
12. AUTOMATIC OPERATOR.
13. MAGNETIC HOLD-OPEN.

GLAZING LEGEND / NOTES

GLAZING UNIT DESIGNATIONS

- GL1 1 1/16" CLEAR LOW 'E' INSULATED GLAZING UNITS
- GL2 1/4" CLEAR GLAZING
- GL3 1 1/16" INSULATED GLAZING UNITS WITH 'OBSURE' GLAZING
- GL4 1/8" PATTERNED ECO-RESIN PANELS. RE: AA6.0.
- GL5 60 MIN. RATED GLAZING

GLAZING GENERAL NOTES

1. ALL EXTERIOR GLAZING TO BE TYPE GL1 UNLESS NOTED OTHERWISE.
2. SAFETY GLASS AT LOCATIONS INDICATED 'T' UNLESS OTHERWISE NOTED.
3. NO SHADE AT WINDOW TYPE W06

DOOR TYPES

SCALE: 1/4" = 1'-0"

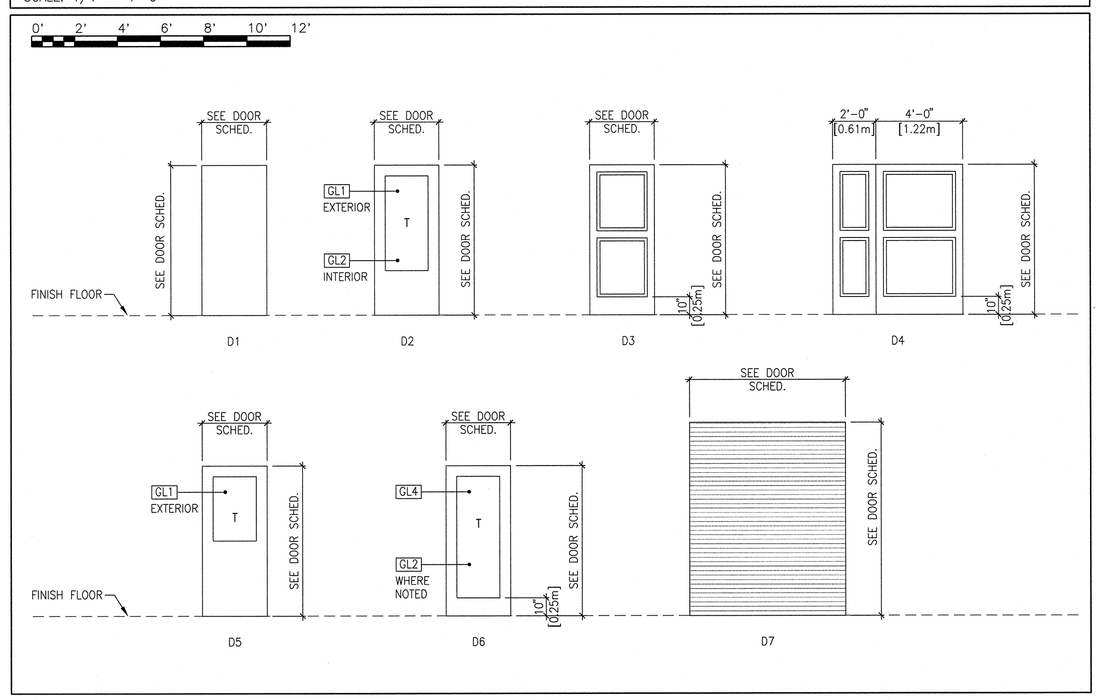

WINDOW TYPES

SCALE: 1/4" = 1'-0"

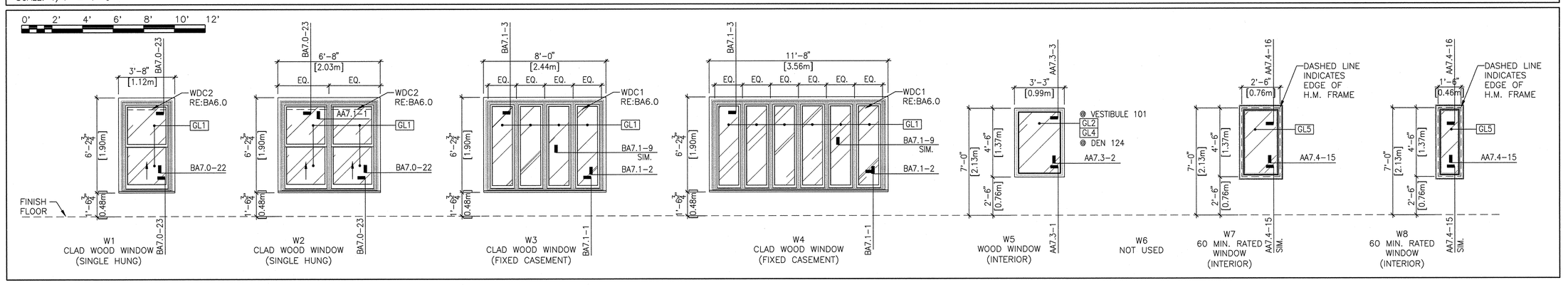

FRAME TYPES

SCALE: 1/4" = 1'-0"

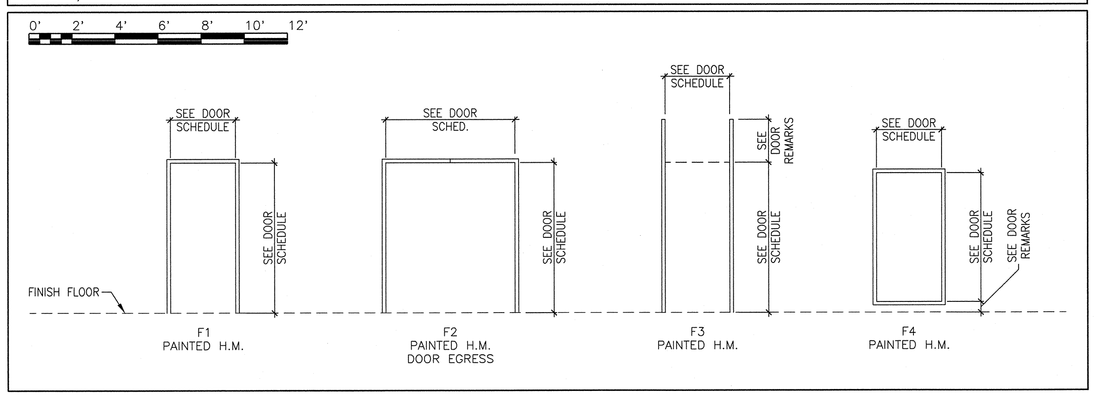

REVISIONS | DATE

CSHQA
C.W. MOORE PLAZA
250 S. 5TH ST. BOISE, ID 83702
(208) 343-4635 FAX (208) 343-1858
http://www.cshqa.com

JOHN D. MAULIN, ARCHITECT
C.W. MOORE PLAZA
250 S. 5TH ST
BOISE, IDAHO
PHONE: 208-343-4635 FAX: 208-343-1858

THESE DRAWINGS AND SPECIFICATIONS, AS INSTRUMENTS OF SERVICE, ARE AND SHALL REMAIN THE PROPERTY OF THE ARCHITECT / ENGINEER WHETHER THE PROJECT FOR WHICH THEY ARE MADE IS EXECUTED OR NOT. THESE DRAWINGS AND SPECIFICATIONS SHALL NOT BE USED BY ANY PERSON OR ENTITY ON OTHER PROJECTS, FOR ADDITIONS TO THIS PROJECT, OR COMPLETION OF THIS PROJECT WHEN PHASED WITHOUT THE WRITTEN CONSENT OF CSHQA OR ITS AFFILIATES. Copyright ©2011

STAMP
LICENSED ARCHITECT AR 1708
JOHN D. MAULIN STATE OF IDAHO
DECEMBER 01, 2011
ORIGINAL DOCUMENT SIGNED BY ARCHITECT ON FILE WITH THE OWNER
ORIGINAL SIGNED BY: JOHN D. MAULIN
ORIGINAL DATE SIGNED: DECEMBER 01, 2011

CAD FILE NAME: 531-319_BA6.4.DWG
XREF FILE NAME: 531-319_xB_30X42TLBK.DWG

DRAWING TITLE: DOOR SCHEDULE AND WINDOW TYPES

APPROVED: CHIEF OF FACILITY MANAGEMENT SERVICE

APPROVED: MEDICAL CENTER DIRECTOR

PROJECT TITLE: BOISE VAMC NEW EXTENDED CARE UNIT BUILDING 'B' CLC

BUILDING NUMBER: 122 | CHECKED: DRD/JDM | DRAWN: BKS

LOCATION: VAMC BOISE, IDAHO

DATE: 12/01/2011
PROJECT NO.: 531-319
DRAWING NO.: BA6.4
DWG 17 OF 78

DEPARTMENT OF VETERANS AFFAIRS

Username: tmontgomery
Dec 05, 2011 - 2:21pm
Q:\2010\10101.0\Arch\02_Drawings\531-319_BA6.4.dwg

2ND FLOOR DOOR SCHEDULE

DOOR NUMBER	ROOM NAME	DOOR TYPE	DOOR SIZE WIDTH	DOOR SIZE HEIGHT	DOOR THICKNESS	DOOR MATERIAL	DOOR GLAZING	DOOR FINISH / FACING	FRAME TYPE	FRAME MATERIAL	FRAME FINISH	FIRE RATING	HARDWARE GROUP	DETAILS THRESHOLD	DETAILS JAMB	DETAILS HEAD	DOOR REMARKS
200	MECHANICAL/ELECTRICAL	D1	4'-0" (1219.2MM)	7'-0" (2133.6MM)	13/4"(44.5)	HM	-	PT	F1	HM	PT	-	8	BA7.5-4	BA7.0-18	BA7.0-16	
201	VESTIBULE	PAIR D2	3'-0" (914.4MM)	7'-0" (2133.6MM)	21/4"(57.2)	AL/WD	GL1	FF/ST	F1	HM	PT	-	12	BA7.5-4	BA7.0-15	BA7.0-16	2,7,8,11,12
201A	VESTIBULE	PAIR D2	3'-0" (914.4MM)	7'-0" (2133.6MM)	21/4"(57.2)	WD	GL2	ST	F1	HM	PT	-	7	-	BA7.2-18	BA7.2-19	6,7,8,11,12
203	KITCHEN	D7	5'-8" (1727.2MM)	7'-0" (2133.6MM)	5/8"(15.8)	SS	-	FF	-	STL	PT	60 MIN	11	-	BA7.0-15	BA7.0-16	3
203A	PANTRY	D3	3'-0" (914.4MM)	7'-0" (2133.6MM)	13/4"(44.5)	WD	-	PT	F1	HM	PT	-	15	-	BA7.2-18	BA7.2-19	9
204	NURSE STORAGE	D3	3'-6" (1066.8MM)	7'-0" (2133.6MM)	13/4"(44.5)	WD	-	PT	F1	HM	PT	-	22	-	BA7.2-18	BA7.2-19	9, 11
204A	NURSE CLEAN STORAGE	D3	3'-0" (914.4MM)	7'-0" (2133.6MM)	13/4"(44.5)	WD	-	PT	F1	HM	PT	-	4	-	BA7.2-18	BA7.2-19	10
205	S.C. BEDROOM	D4	6'-0" (1828.8MM)	7'-0" (2133.6MM)	13/4"(44.5)	WD	-	PT	F1	HM	PT	-	20	-	BA7.2-18	BA7.2-19	
205A	S.C. BATH	D3	4'-0" (1219.2MM)	8'-0" (2438.4MM)	13/4"(44.5)	WD	-	PT	F3	HM	PT	-	17	-	BA7.2-18	-	4, 7
206	PHARMACY	D3	3'-6" (1066.8MM)	7'-0" (2133.6MM)	13/4"(44.5)	WD	-	PT	F1	HM	PT	-	22	-	BA7.2-18	BA7.2-19	9, 11
207	BEDROOM	D4	4'-0" (1219.2MM)	7'-0" (2133.6MM)	13/4"(44.5)	WD	-	PT	F1	HM	PT	-	20	-	BA7.2-18	BA7.2-19	
207A	BATH	D3	3'-0" (1219.2MM)	8'-0" (2438.4MM)	13/4"(44.5)	WD	-	PT	F3	HM	PT	-	17	-	BA7.2-18	-	4, 7
208	BEDROOM	D3	4'-0" (1219.2MM)	7'-0" (2133.6MM)	13/4"(44.5)	WD	-	PT	F1	HM	PT	-	14	-	BA7.2-18	BA7.2-19	
208A	BATH	D3	3'-0" (1219.2MM)	8'-0" (2438.4MM)	13/4"(44.5)	WD	-	PT	F3	HM	PT	-	17	-	BA7.2-18	-	4, 7
209	SPA	D3	4'-0" (1219.2MM)	7'-0" (2133.6MM)	13/4"(44.5)	WD	-	PT	F1	HM	PT	-	1	-	BA7.2-18	BA7.2-19	7
210	CLEAN	D3	3'-0" (914.4MM)	7'-0" (2133.6MM)	13/4"(44.5)	WD	-	PT	F1	HM	PT	-	21	BA7.2-17	BA7.2-18	BA7.2-19	9, 11
211	SOILED	D3	3'-0" (914.4MM)	7'-0" (2133.6MM)	13/4"(44.5)	WD	-	PT	F1	HM	PT	45 MIN	21	BA7.2-17	BA7.2-18	BA7.2-19	9, 11
212	HAC	D3	3'-0" (914.4MM)	7'-0" (2133.6MM)	13/4"(44.5)	WD	-	PT	F1	HM	PT	-	5	-	BA7.2-18	BA7.2-19	9
213	BEDROOM	D3	4'-0" (1219.2MM)	7'-0" (2133.6MM)	13/4"(44.5)	WD	-	PT	F1	HM	PT	-	14	-	BA7.2-18	BA7.2-19	
213A	BATH	D3	3'-0" (1219.2MM)	8'-0" (2438.4MM)	13/4"(44.5)	WD	-	PT	F3	HM	PT	-	17	-	BA7.2-18	-	4, 7
214	VESTIBULE	D5	4'-0" (1219.2MM)	7'-0" (2133.6MM)	13/4"(44.5)	HM	GL1	PT	F1	HM	PT	-	10	BA7.5-8	BA7.0-15	BA7.0-16	7, 11
214A	VESTIBULE	D2	4'-0" (1219.2MM)	7'-0" (2133.6MM)	21/4"(57.2)	WD	GL2	ST	F1	HM	PT	-	15	-	BA7.2-18	BA7.2-19	7, 11
215	BEDROOM	D3	4'-0" (1219.2MM)	7'-0" (2133.6MM)	13/4"(44.5)	WD	-	PT	F1	HM	PT	-	14	-	BA7.2-18	BA7.2-19	
215A	BATH	D3	3'-0" (1219.2MM)	8'-0" (2438.4MM)	13/4"(44.5)	WD	-	PT	F3	HM	PT	-	17	-	BA7.2-18	-	4, 7
216	BEDROOM	D3	4'-0" (1219.2MM)	7'-0" (2133.6MM)	13/4"(44.5)	WD	-	PT	F1	HM	PT	-	14	-	BA7.2-18	BA7.2-19	
216A	BATH	D3	3'-0" (1219.2MM)	8'-0" (2438.4MM)	13/4"(44.5)	WD	-	PT	F3	HM	PT	-	17	-	BA7.2-18	-	4, 7
217	LAUNDRY	D3	3'-0" (914.4MM)	7'-0" (2133.6MM)	13/4"(44.5)	WD	-	PT	F1	HM	PT	45 MIN	16	BA7.2-17	BA7.2-18	BA7.2-19	
218	STAFF TOILET	D3	3'-0" (914.4MM)	7'-0" (2133.6MM)	13/4"(44.5)	WD	-	PT	F1	HM	PT	-	1	-	BA7.2-18	BA7.2-19	7
220	HOME OFFICE	D6	3'-0" (914.4MM)	7'-0" (2133.6MM)	13/4"(44.5)	WD	GL4	PT	F1	HM	PT	-	2	-	BA7.2-18	BA7.2-19	7
221	BEDROOM	D3	4'-0" (1219.2MM)	7'-0" (2133.6MM)	13/4"(44.5)	WD	-	PT	F1	HM	PT	-	14	-	BA7.2-18	BA7.2-19	
221A	BATH	D3	3'-0" (1219.2MM)	8'-0" (2438.4MM)	13/4"(44.5)	WD	-	PT	F3	HM	PT	-	17	-	BA7.2-18	-	4, 7
222	PUBLIC TOILET	D3	3'-0" (914.4MM)	7'-0" (2133.6MM)	13/4"(44.5)	WD	-	PT	F1	HM	PT	-	18	-	BA7.2-18	BA7.2-19	7
223	VESTIBULE	PAIR D2	3'-0" (914.4MM)	7'-0" (2133.6MM)	21/4"(57.2)	AL/WD	GL1	FF/ST	F1	HM	PT	-	12	BA7.5-4	BA7.0-15	BA7.0-16	2,7,8,11,12
223A	VESTIBULE	PAIR D2	3'-0" (914.4MM)	7'-0" (2133.6MM)	21/4"(57.2)	WD	GL2	ST	F1	HM	PT	-	7	-	BA7.2-18	BA7.2-19	6,7,8,11,12
224	DEN	D6	3'-0" (914.4MM)	7'-0" (2133.6MM)	13/4"(44.5)	WD	GL4	PT	F1	HM	PT	-	19	-	BA7.2-18	BA7.2-19	7
225	CLOSET	D3	3'-0" (914.4MM)	7'-0" (2133.6MM)	13/4"(44.5)	WD	-	PT	F1	HM	PT	-	5	-	BA7.2-18	BA7.2-19	9
226	BEDROOM	D3	4'-0" (1219.2MM)	7'-0" (2133.6MM)	13/4"(44.5)	WD	-	PT	F1	HM	PT	-	14	-	BA7.2-18	BA7.2-19	
226A	BATH	D3	3'-0" (1219.2MM)	8'-0" (2438.4MM)	13/4"(44.5)	WD	-	PT	F3	HM	PT	-	17	-	BA7.2-18	-	4, 7
227	BEDROOM	D3	4'-0" (1219.2MM)	7'-0" (2133.6MM)	13/4"(44.5)	WD	-	PT	F1	HM	PT	-	14	-	BA7.2-18	BA7.2-19	
227A	BATH	D3	3'-0" (1219.2MM)	8'-0" (2438.4MM)	13/4"(44.5)	WD	-	PT	F3	HM	PT	-	17	-	BA7.2-18	-	4, 7
228	BEDROOM	D3	4'-0" (1219.2MM)	7'-0" (2133.6MM)	13/4"(44.5)	WD	-	PT	F1	HM	PT	-	20	-	BA7.2-18	BA7.2-19	
228A	BATH	D3	3'-0" (1219.2MM)	8'-0" (2438.4MM)	13/4"(44.5)	WD	-	PT	F3	HM	PT	-	17	-	BA7.2-18	-	4, 7
C21	CORRIDOR	PAIR D3	3'-6" (1066.8MM)	7'-0" (2133.6MM)	13/4"(44.5)	WD	-	PT	F2	HM	PT	20 MIN	9	-	BA7.2-18	BA7.2-19	1,11,13
C23	CORRIDOR	PAIR D3	3'-6" (1066.8MM)	7'-0" (2133.6MM)	13/4"(44.5)	WD	-	PT	F2	HM	PT	20 MIN	9	-	BA7.2-18	BA7.2-19	1,11,13
300A	MANSARD ACCESS	D1	3'-0" (1219.2MM)	6'-0" (1828.8MM)	13/4"(44.5)	HM	-	PT	F4	HM	PT	-	24	BA7.4-21	BA7.4-15 SIM	BA7.4-15	5
300B	MANSARD ACCESS	D1	3'-0" (1219.2MM)	6'-0" (1828.8MM)	13/4"(44.5)	HM	-	PT	F4	HM	PT	-	24	BA7.4-21	BA7.4-15 SIM	BA7.4-15	5

GENERAL NOTES:

A. COORDINATE ALL DOORS AND WINDOWS WITH THE FLOOR PLANS AND EXTERIOR ELEVATIONS.

B. FIELD VERIFY ALL DIMENSIONS PRIOR TO FABRICATION.

C. EXTERIOR WINDOW TYPES ARE SHOWN FROM THE OUTSIDE.

D. ALUMINUM CLAD WOOD WINDOWS AND DOORS FINISH TO MATCH MARVIN WINDOWS COCONUT CREAM, UNLESS NOTED OTHERWISE.

E. RE: BA6.4 FOR DOOR TYPES, FRAME TYPES, GLAZING TYPES AND REMARKS.

Username: bsmith
Date: 02, 2011 - 12:35pm
Q:\2010\1010105\Arch\02_Drawings\531-319_BA6.5.dwg

REVISIONS | DATE

CSHQA

C.W. MOORE PLAZA
250 S. 5TH ST. BOISE, ID 83702
(208) 343-4635 FAX (208) 343-1858
http://www.cshqa.com

JOHN D. MAULIN, ARCHITECT
C.W. MOORE PLAZA
250 S. 5TH ST
BOISE, IDAHO
PHONE: 208-343-4635 FAX: 208-343-1858

THESE DRAWINGS AND SPECIFICATIONS, AS INSTRUMENTS OF SERVICE, ARE AND SHALL REMAIN THE PROPERTY OF THE ARCHITECT / ENGINEER WHETHER THE PROJECT FOR WHICH THEY ARE MADE IS EXECUTED OR NOT. THESE DRAWINGS AND SPECIFICATIONS SHALL NOT BE USED BY ANY PERSON OR ENTITY ON OTHER PROJECTS, FOR ADDITIONS TO THIS PROJECT, OR COMPLETION OF THIS PROJECT WHEN PHASED WITHOUT THE WRITTEN CONSENT OF CSHQA OR ITS AFFILIATES. Copyright ©2011

STAMP

LICENSED ARCHITECT AR.1706

JOHN D. MAULIN
STATE OF IDAHO

DECEMBER 01, 2011

ORIGINAL DOCUMENT SIGNED BY ARCHITECT ON FILE WITH THE OWNER
ORIGINAL SIGNED BY:
JOHN D. MAULIN
ORIGINAL DATE SIGNED:
DECEMBER 01, 2011

CAD FILE NAME: 531-319_BA6.5.DWG

XREF FILE NAME: 531-319_xB_30X42TLBK.DWG

DRAWING TITLE: DOOR SCHEDULE

PROJECT TITLE: BOISE VAMC
NEW EXTENDED CARE UNIT
BUILDING 'B' CLC

DATE: 12/01/2011

PROJECT NO.: 531-319

APPROVED: CHIEF OF FACILITY MANAGEMENT SERVICE

BUILDING NUMBER: 122

CHECKED: DRD/JDM

DRAWN: BKS

DRAWING NO.: BA6.5

APPROVED: MEDICAL CENTER DIRECTOR

LOCATION: VAMC BOISE, IDAHO

DWG 18 OF 78

DEPARTMENT OF VETERANS AFFAIRS

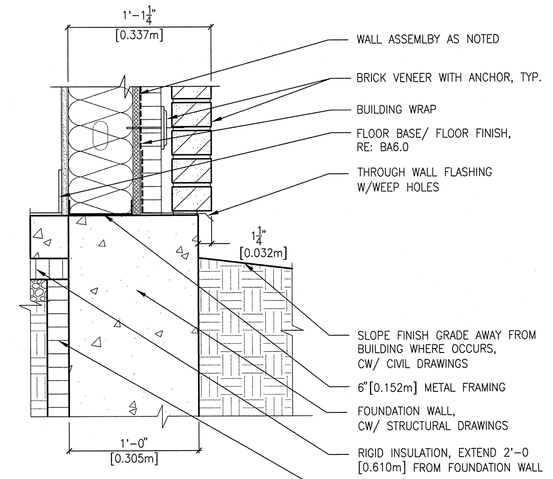

1 WALL AT GRADE
SCALE 1 1/2" = 1'-0"

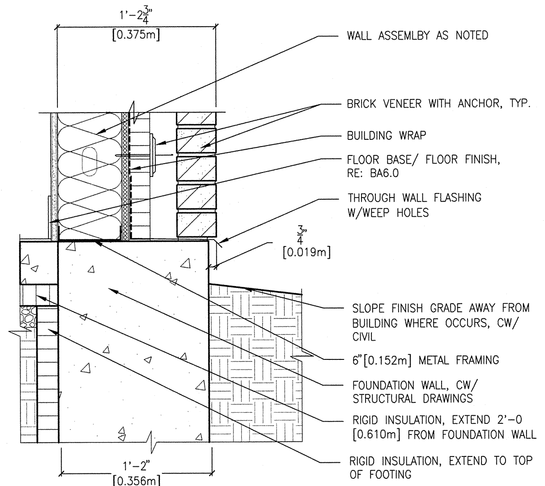

2 WAINSCOT WALL AT GRADE
SCALE 1 1/2" = 1'-0"

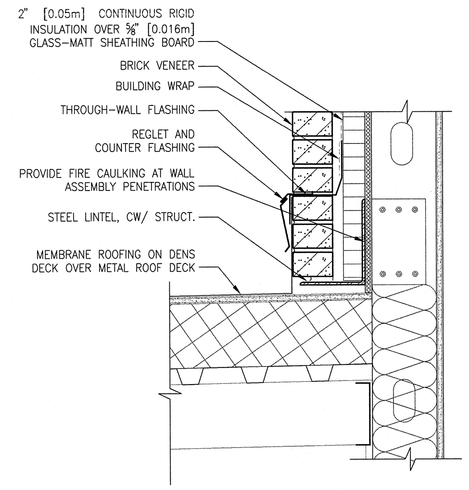

3 FLASHING AT WALL
SCALE 1 1/2" = 1'-0"

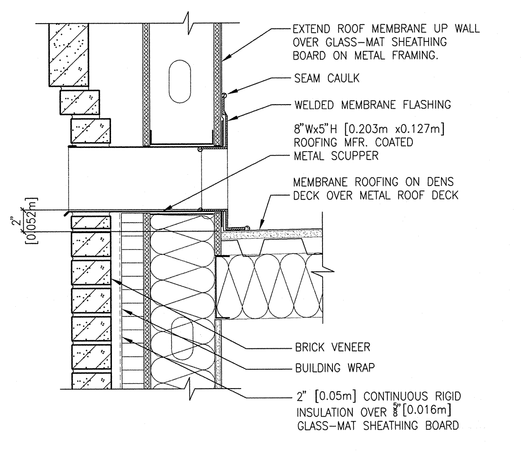

4 OVERFLOW SCUPPER
SCALE 1 1/2" = 1'-0"

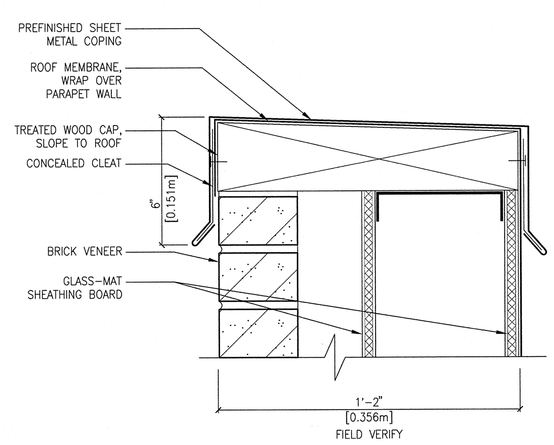

5 PARAPET COPING
SCALE 3" = 1'-0"

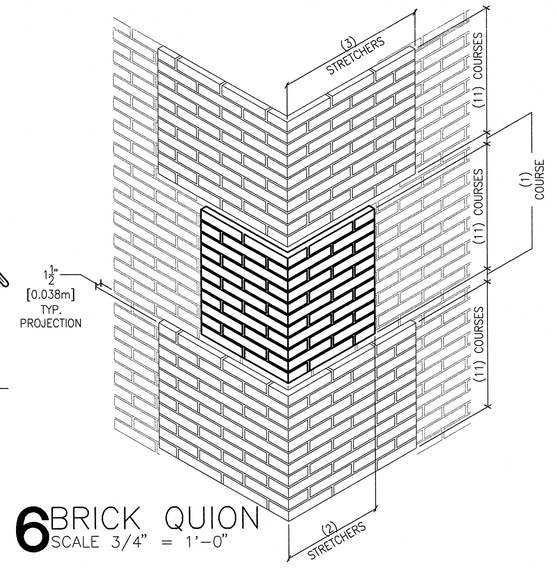

6 BRICK QUION
SCALE 3/4" = 1'-0"

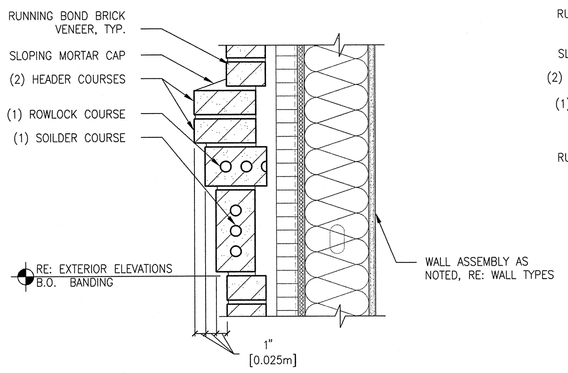

7 BRICK BANDING, TYP.
SCALE 1 1/2" = 1'-0"

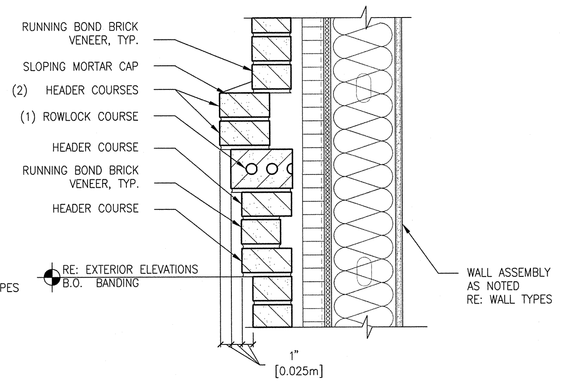

8 BRICK BANDING AT OUTSIDE CORNERS
SCALE 1 1/2" = 1'-0"

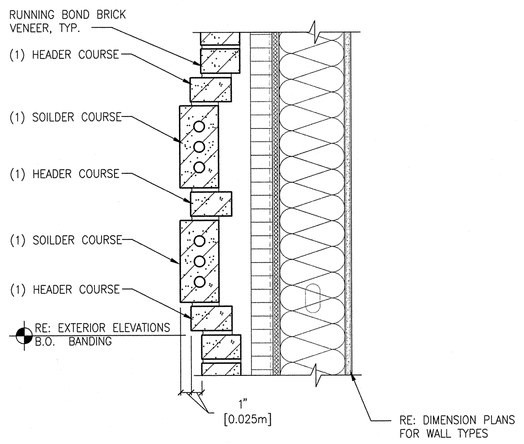

9 BRICK BANDING
SCALE 1 1/2" = 1'-0"

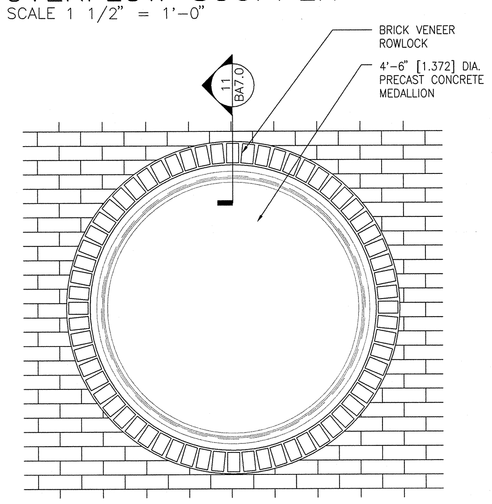

10 MEDALLION
SCALE 3/4" = 1'-0"

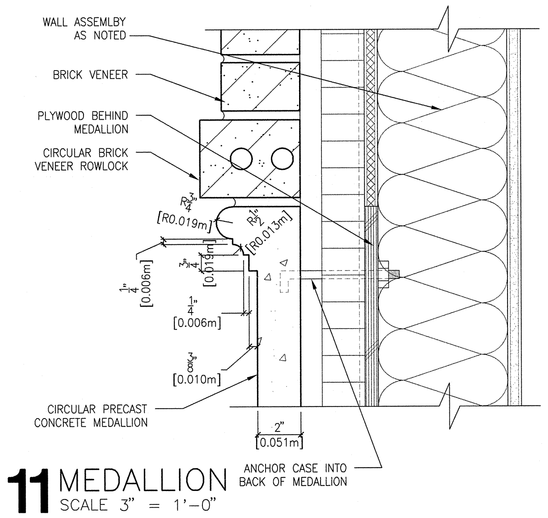

11 MEDALLION
SCALE 3" = 1'-0"

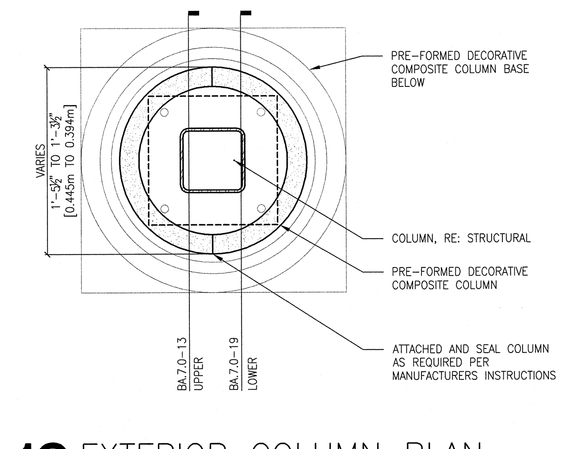

12 EXTERIOR COLUMN PLAN
SCALE 1 1/2" = 1'-0"

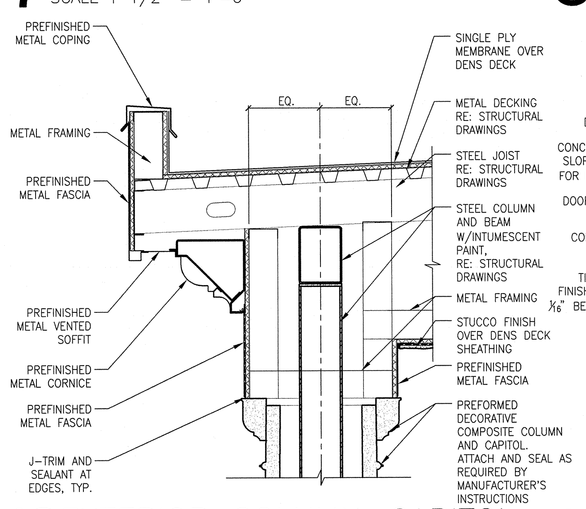

13 EXTERIOR COLUMN-CAPITOL
SCALE 1" = 1'-0"

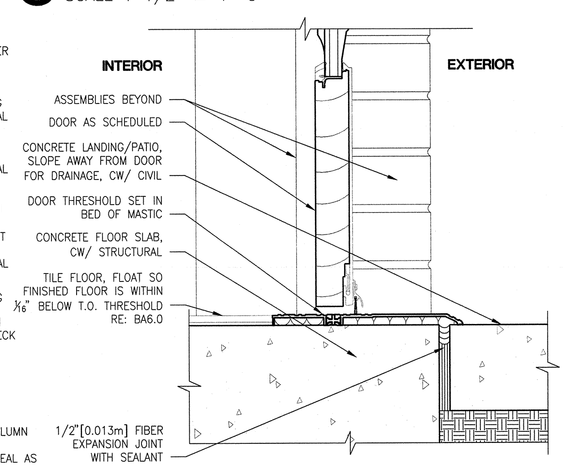

14 DOOR THRESHOLD
SCALE 3" = 1'-0"

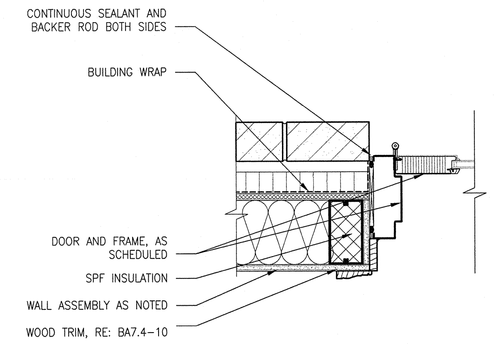

15 EXTERIOR DOOR JAMB
SCALE 1 1/2" = 1'-0"

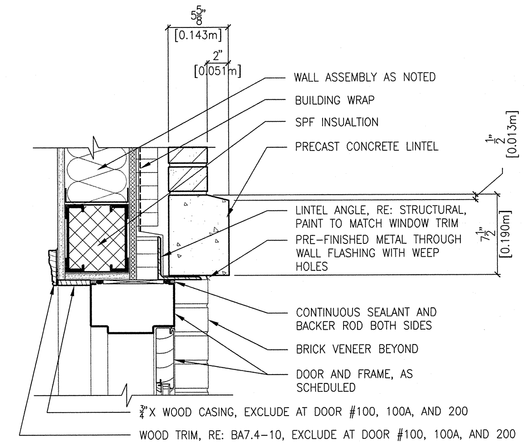

16 EXTERIOR DOOR HEAD
SCALE 1 1/2" = 1'-0"

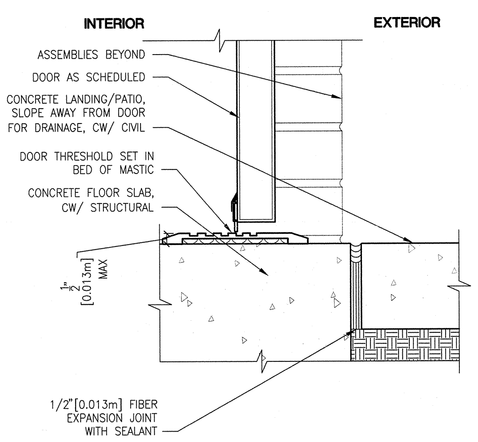

17 DOOR THRESHOLD
SCALE 3" = 1'-0"

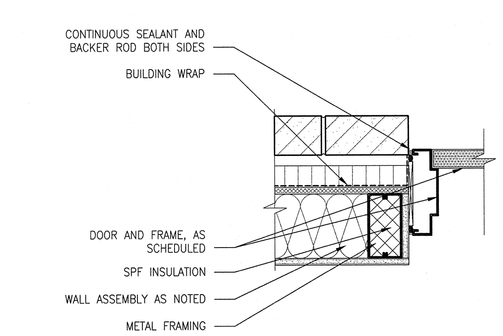

18 EXTERIOR DOOR JAMB
SCALE 1 1/2" = 1'-0"

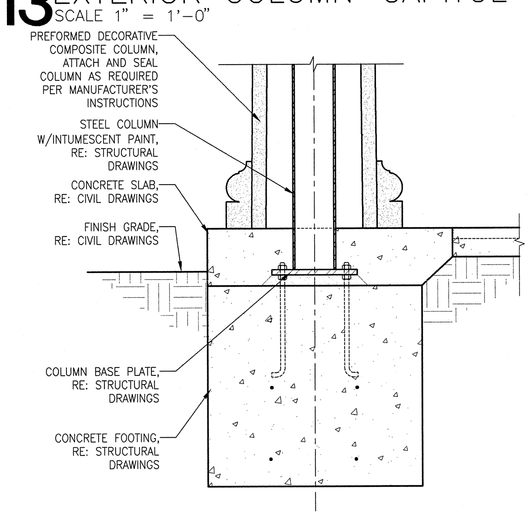

19 EXTERIOR COLUMN - BASE
SCALE 1" = 1'-0"

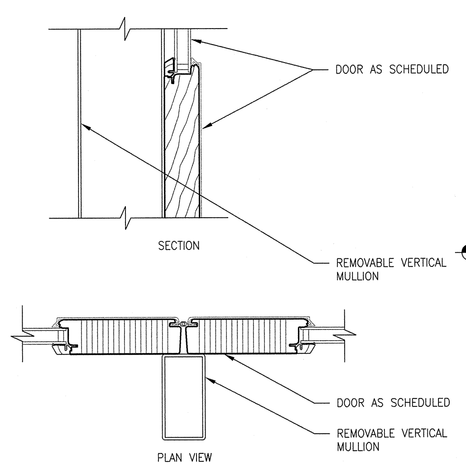

20 REMOVABLE MULLION DETAIL
SCALE3" = 1'-0"

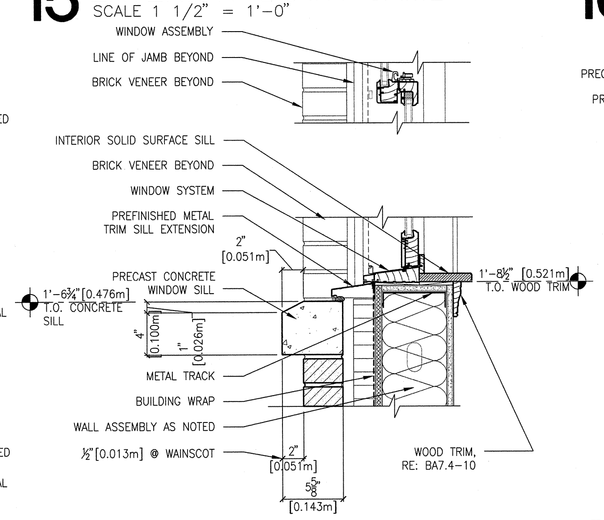

21 SINGLE HUNG WINDOW SILL
SCALE 1 1/2" = 1'-0"

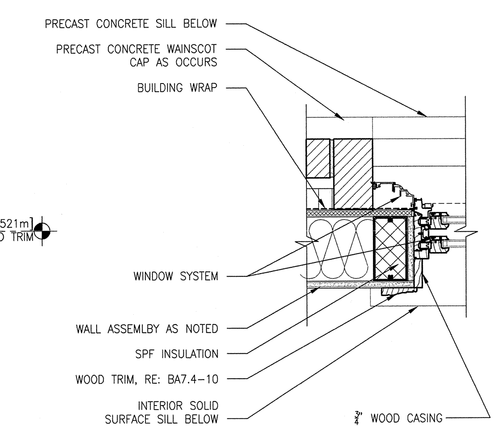

22 SINGLE HUNG WINDOW JAMB
SCALE 1 1/2" = 1'-0"

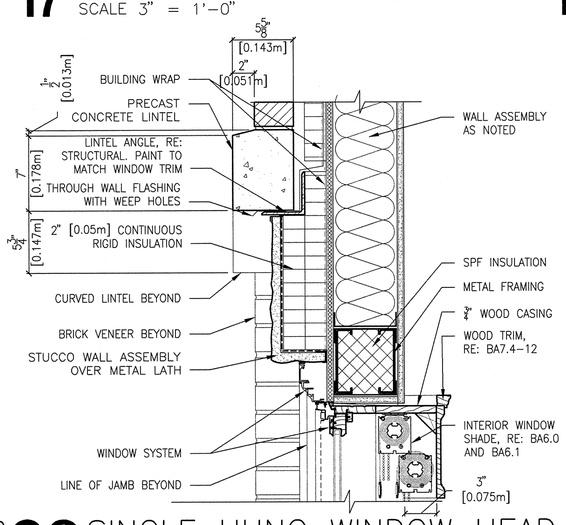

23 SINGLE HUNG WINDOW HEAD
SCALE 1 1/2" = 1'-0"

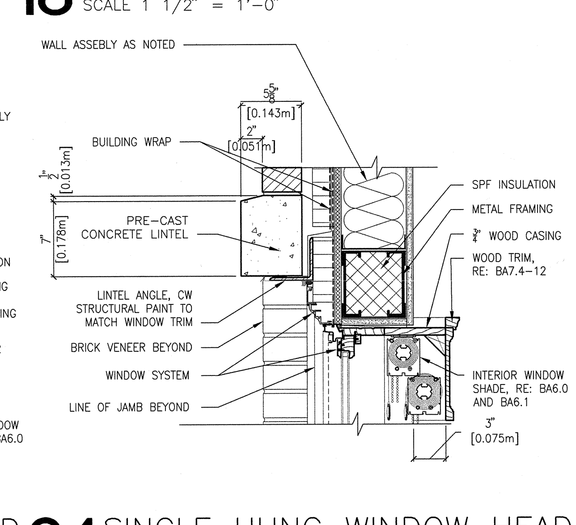

24 SINGLE HUNG WINDOW HEAD
SCALE 1 1/2" = 1'-0"

Username: bsmith
Date: Dec. 02, 2011 - 12:36pm
Q:\2010\01010\Arch\02_Drawings\531-319_BA7.0.dwg

REVISIONS	DATE

CSHQA
C.W. MOORE PLAZA
250 S. 5TH ST. BOISE, ID 83702
(208) 343-4635 FAX (208) 343-1858
http://www.cshqa.com

JOHN D. MAULIN, ARCHITECT
C.W. MOORE PLAZA
250 S. 5TH ST
BOISE, IDAHO
PHONE: 208-343-4635 FAX: 208-343-1858

THESE DRAWINGS AND SPECIFICATIONS, AS INSTRUMENTS OF SERVICE, ARE AND SHALL REMAIN THE PROPERTY OF THE ARCHITECT / ENGINEER WHETHER THE PROJECT FOR WHICH THEY ARE MADE IS EXECUTED OR NOT. THESE DRAWINGS AND SPECIFICATIONS SHALL NOT BE USED BY ANY PERSON OTHER THAN THE OWNER FOR THE PROJECT FOR WHICH THEY WERE PROVIDED, FOR COMPLETION OF THE PROJECT WHEN PHASED WITHOUT THE WRITTEN CONSENT OF CSHQA OR ITS AFFILIATES. Copyright ©2011

STAMP
LICENSED ARCHITECT
AR-1706
JOHN D. MAULIN
STATE OF IDAHO
DECEMBER 01, 2011
ORIGINAL DOCUMENT SIGNED BY ARCHITECT ON FILE WITH THE OWNER
ORIGINAL SIGNED BY: JOHN D. MAULIN
ORIGINAL DATE SIGNED: DECEMBER 01, 2011

CAD FILE NAME: 531-319_BA7.0.DWG
XREF FILE NAME: 531-319_xB_30X42TLBK.DWG

DRAWING TITLE: BUILDING DETAILS

PROJECT TITLE: BOISE VAMC
NEW EXTENDED CARE UNIT
BUILDING 'B' CLC

DATE: 12/01/2011
PROJECT NO. 531-319

APPROVED: CHIEF OF FACILITY MANAGEMENT SERVICE
APPROVED: MEDICAL CENTER DIRECTOR

BUILDING NUMBER: 122
CHECKED: DRD/JDM
DRAWN: TWM
LOCATION: VAMC BOISE, IDAHO

DRAWING NO. BA7.0
DWG 19 OF 78

DEPARTMENT OF VETERANS AFFAIRS

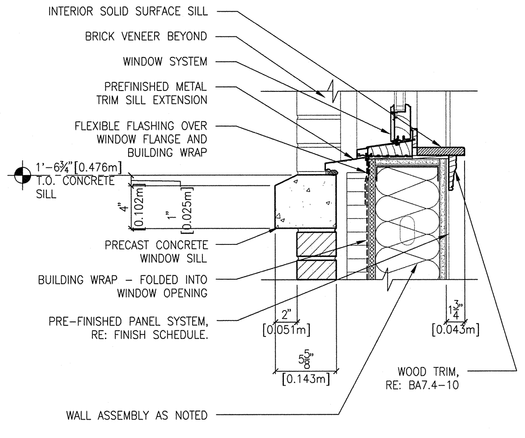

1 FIXED WINDOW SILL
SCALE 1 1/2" = 1'-0"

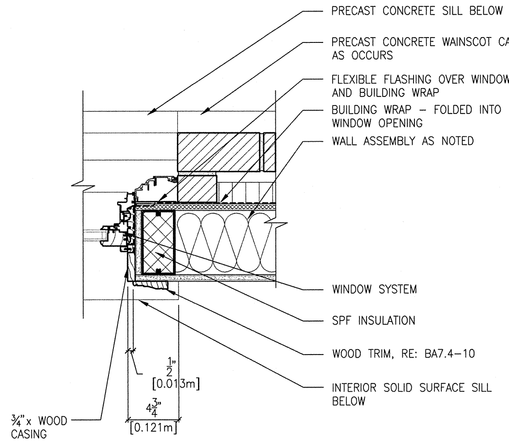

2 FIXED WINDOW JAMB
SCALE 1 1/2" = 1'-0"

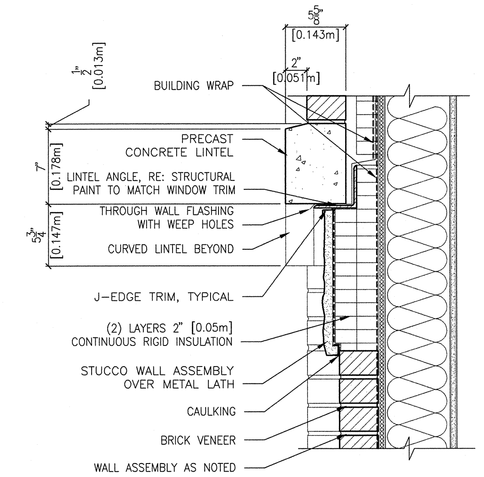

3 FIXED WINDOW HEAD
SCALE 1 1/2" = 1'-0"

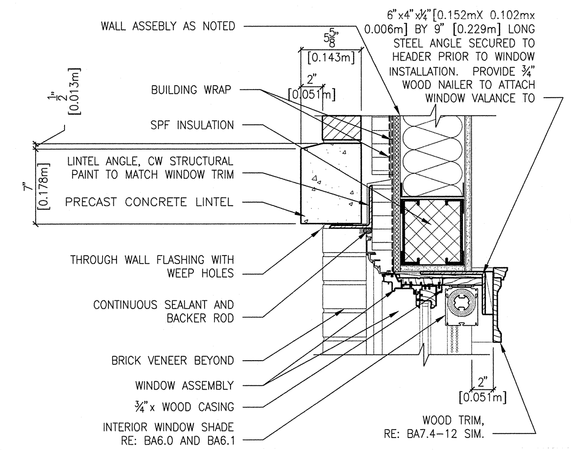

4 FIXED WINDOW HEAD W/ VALANCE SUPPORT ANGLE
SCALE 1 1/2" = 1'-0"

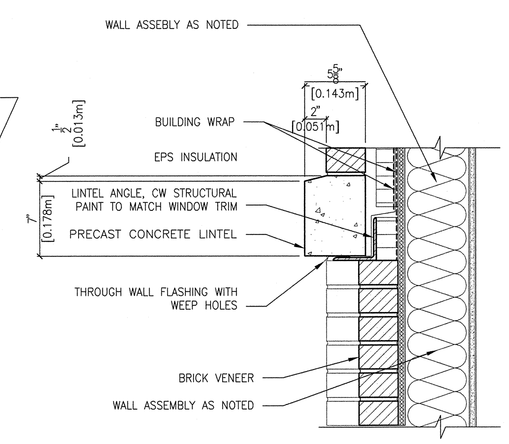

5 BRICK PANEL HEAD
SCALE 1 1/2" = 1'-0"

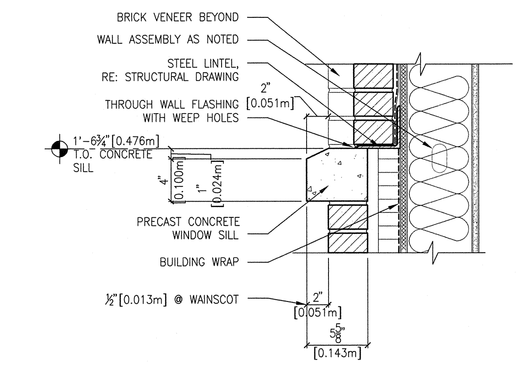

6 BRICK PANEL SILL
SCALE 1 1/2" = 1'-0"

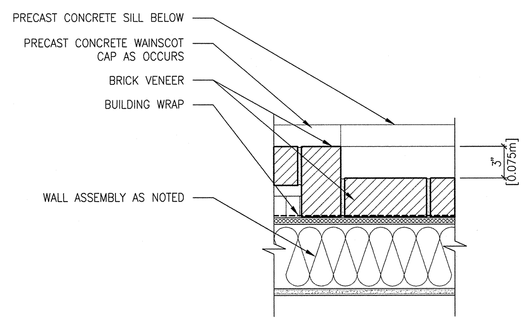

7 BRICK PANEL JAMB
SCALE 1 1/2" = 1'-0"

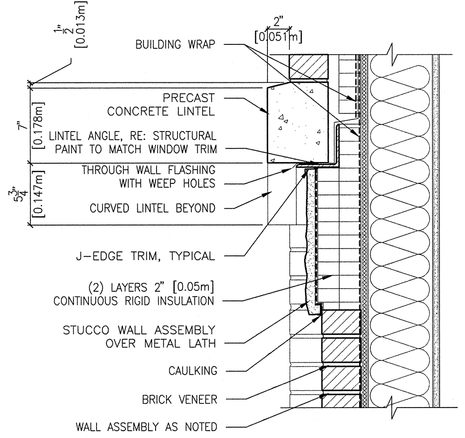

8 BRICK PANEL HEAD
SCALE 1 1/2" = 1'-0"

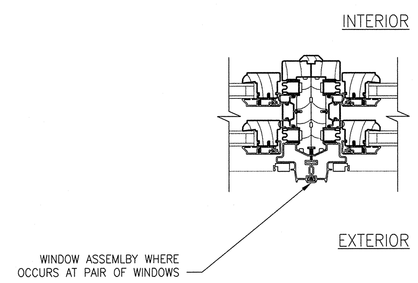

9 MULLION AT SINGLE HUNG PAIR
SCALE 3" = 1'-0"

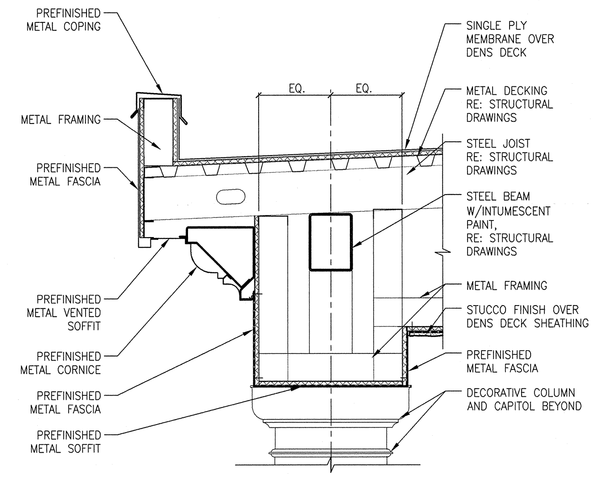

10 EDGE DETAIL AT CANOPY
SCALE 1" = 1'-0"

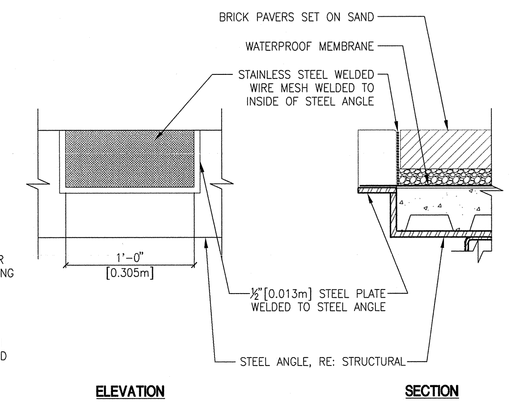

11 PORCH SCUPPER
SCALE 1 1/2" = 1'-0"

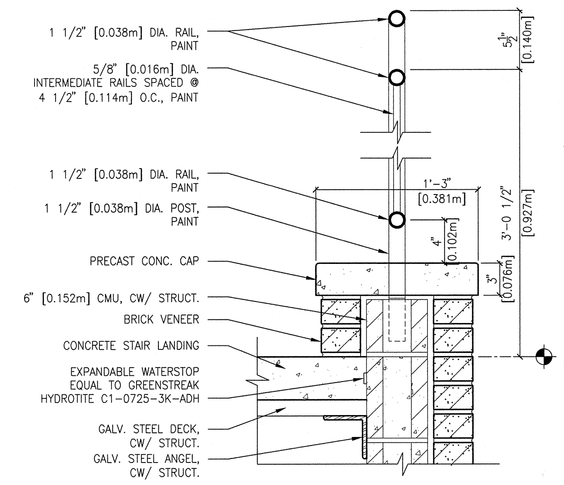

12 STAIR RAILING
SCALE 1 1/2" = 1'-0"

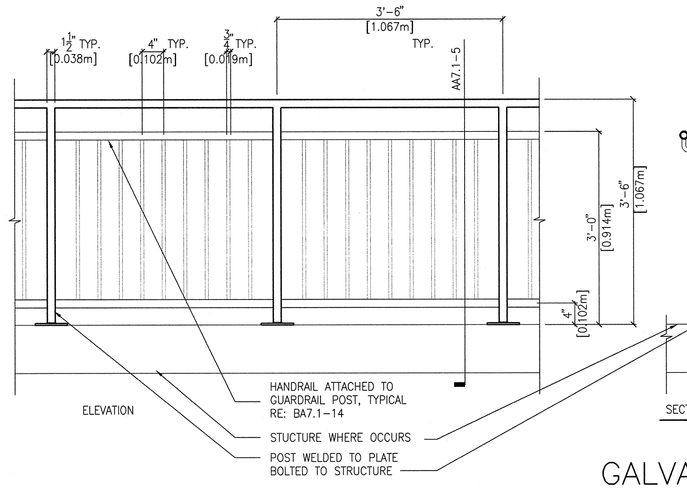

13 GUARDRAIL DETAIL
SCALE 3/4" = 1'-0"

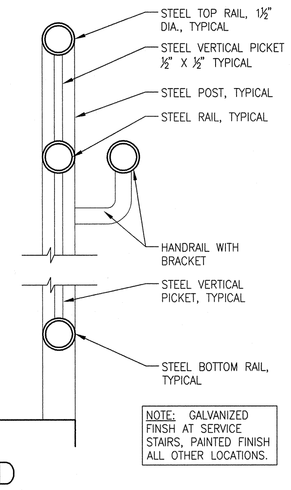

14 GALVANIZED GUARDRAIL/HANDRAIL SECTION
SCALE 3" = 1'-0"

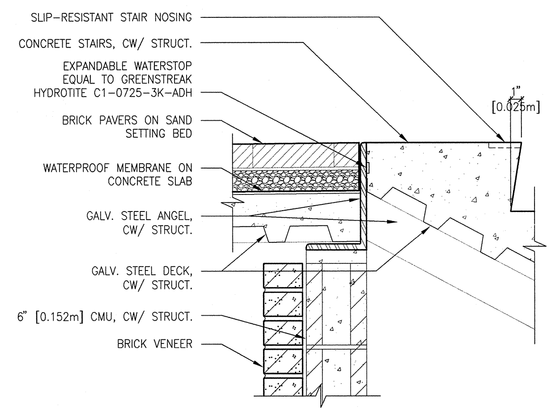

15 FRONT STAIR AT TOP
SCALE 1 1/2" = 1'-0"

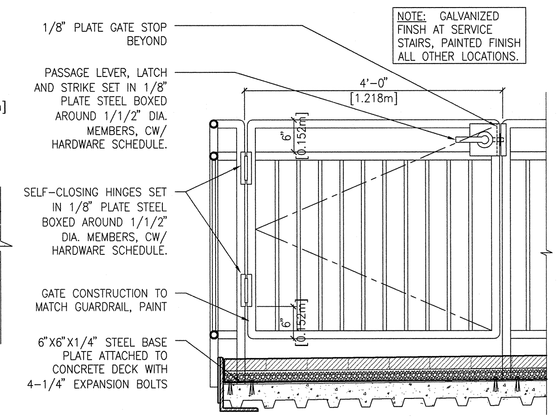

16 GATE AT STAIRS
SCALE: 3/4" = 1'-0"

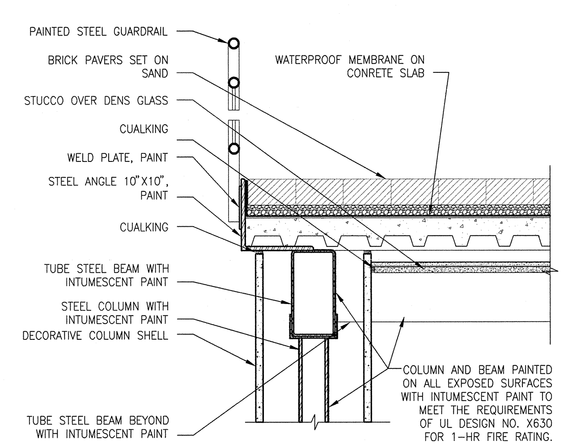

17 EDGE DETAIL AT PORCH
SCALE 1" = 1'-0"

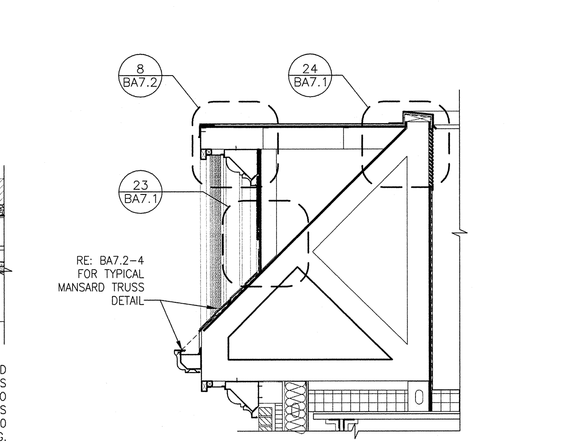

18 GABLE OVERBUILD
SCALE 1/2" = 1'-0"

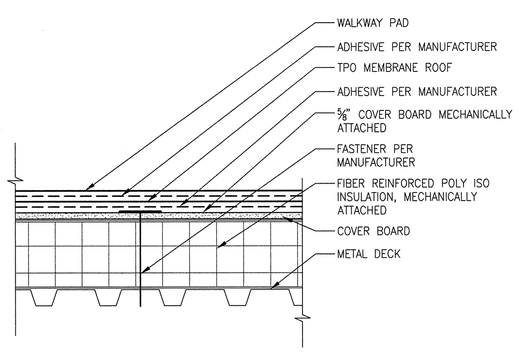

19 ROOFING ASSEMBLY
SCALE 1 1/2" = 1'-0"

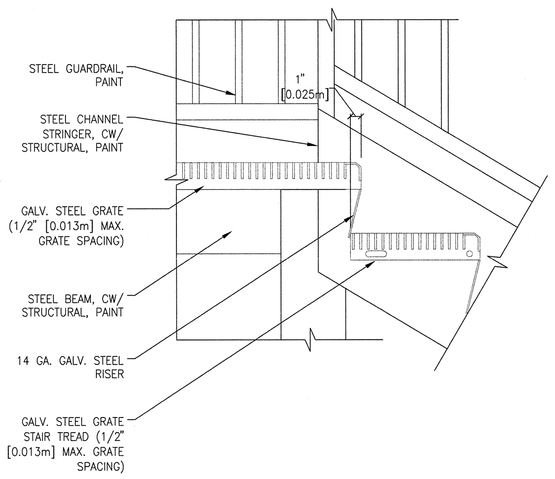

20 STAIR AT TOP
SCALE 1 1/2" = 1'-0"

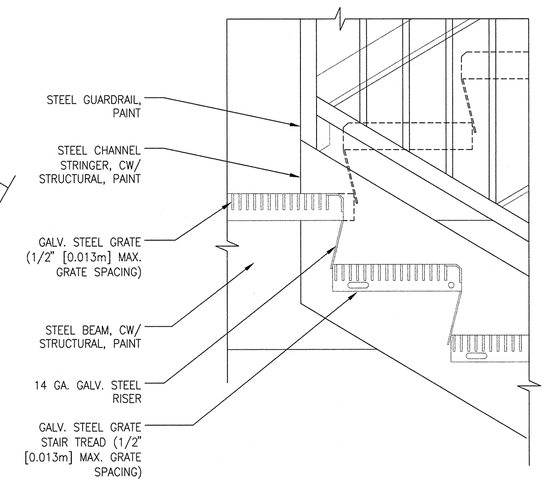

21 STAIR AT LANDING
SCALE 1 1/2" = 1'-0"

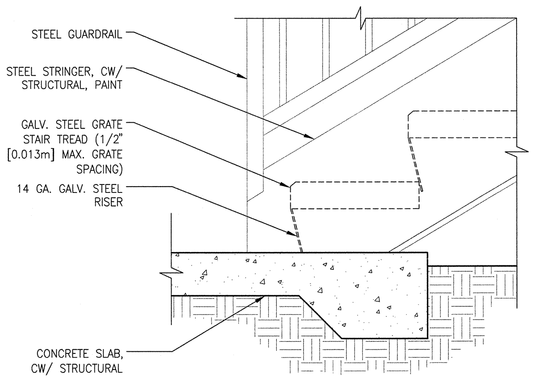

22 STAIR AT BOTTOM
SCALE 1 1/2" = 1'-0"

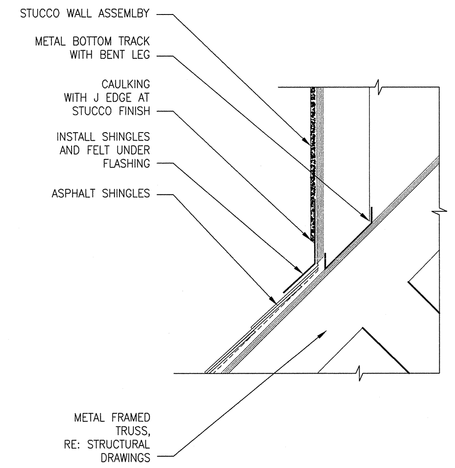

23 STUCCO AT GABLE
SCALE 1 1/2" = 1'-0"

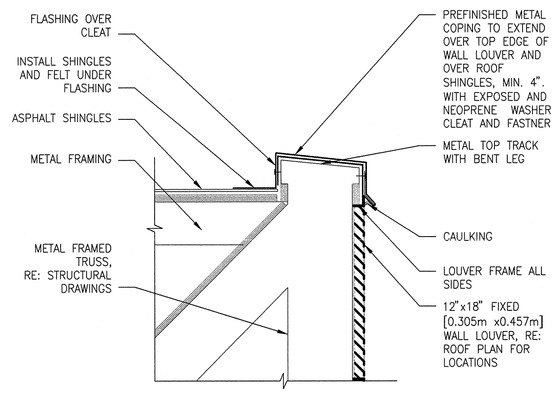

24 OVERBUILD AT COPING
SCALE 1 1/2" = 1'-0"

REVISIONS	DATE

CSHQA
C.W. MOORE PLAZA
250 S. 5TH ST. BOISE, ID 83702
(208) 343-4635 FAX (208) 343-1858
http://www.cshqa.com

JOHN D. MAULIN, ARCHITECT
C.W. MOORE PLAZA
250 S. 5TH ST
BOISE, IDAHO
PHONE: 208-343-4635 FAX: 208-343-1858

THESE DRAWINGS AND SPECIFICATIONS, AS INSTRUMENTS OF SERVICE, ARE AND SHALL REMAIN THE PROPERTY OF THE ARCHITECT / ENGINEER WHETHER THE PROJECT FOR WHICH THEY WERE MADE IS EXECUTED OR NOT. THE DRAWINGS AND SPECIFICATIONS SHALL NOT BE USED BY ANY PERSON OR ENTITY, ON OTHER PROJECTS, FOR ADDITIONS TO THIS PROJECT, OR COMPLETION OF THIS PROJECT WHEN PHASED WITHOUT THE WRITTEN CONSENT OF CSHQA OR ITS AFFILIATES. Copyright ©2011

STAMP
LICENSED ARCHITECT AR.1706
JOHN D. MAULIN STATE OF IDAHO
DECEMBER 01, 2011
ORIGINAL DOCUMENT SIGNED BY ARCHITECT ON FILE WITH THE OWNER
ORIGINAL SIGNED BY: JOHN D. MAULIN
ORIGINAL DATE SIGNED: DECEMBER 01, 2011

CAD FILE NAME: 531-319_BA7.1.DWG
XREF FILE NAME: 531-319_xB_30X42TLBK.DWG

DRAWING TITLE: BUILDING DETAILS

PROJECT TITLE: BOISE VAMC NEW EXTENDED CARE UNIT BUILDING 'B' CLC

DATE: 12/01/2011
PROJECT NO.: 531-319

APPROVED: CHIEF OF FACILITY MANAGEMENT SERVICE
APPROVED: MEDICAL CENTER DIRECTOR

BUILDING NUMBER: 122
CHECKED: DRD/JDM
DRAWN: BKS
LOCATION: VAMC BOISE, IDAHO
DRAWING NO.: BA7.1
DWG 20 OF 78

DEPARTMENT OF VETERANS AFFAIRS

Username: bsmith
Date: 12/01/2011 12:36pm
Q:\2010\10101.0\Arch\02_Drawings\531-319_BA7.1.dwg

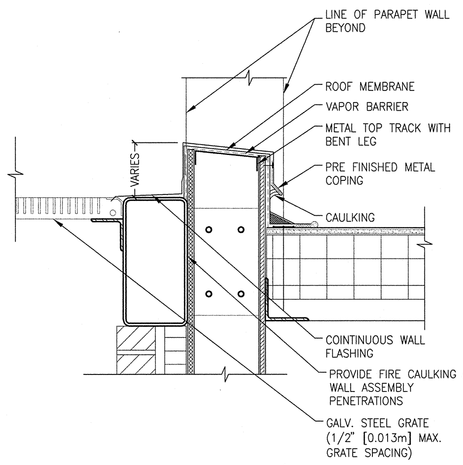

1 CURB AT ROOF/STAIR
SCALE 1 1/2" = 1'-0"

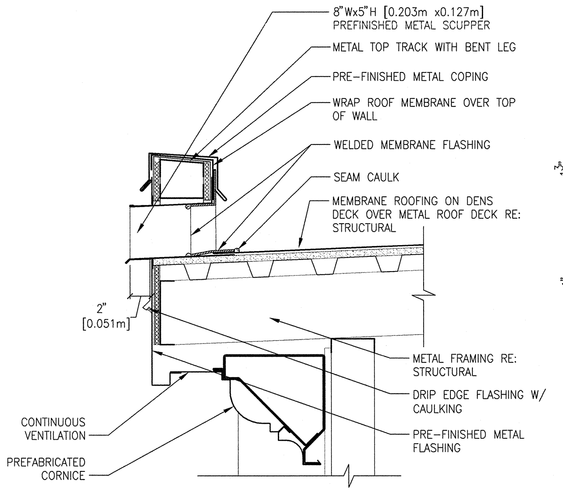

2 SCUPPER AT ROOF
SCALE 1 1/2" = 1'-0"

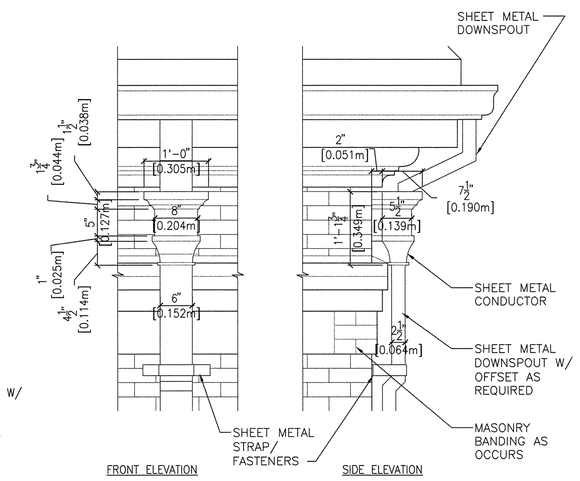

3 RAINWATER CONDUCTOR
SCALE 3/4" = 1'-0"

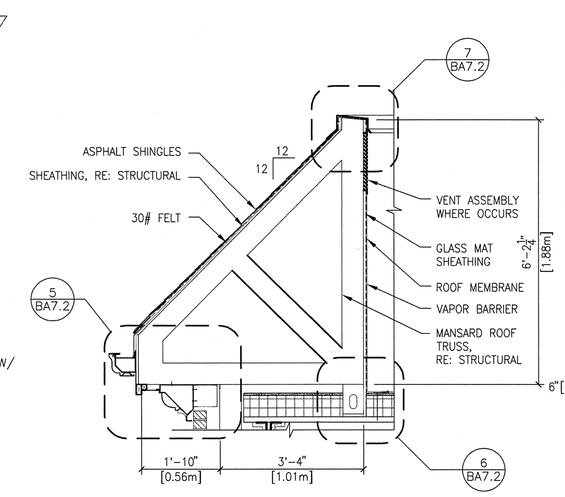

4 MANSARD ROOF ASSEMBLY
SCALE 1/2" = 1'-0"

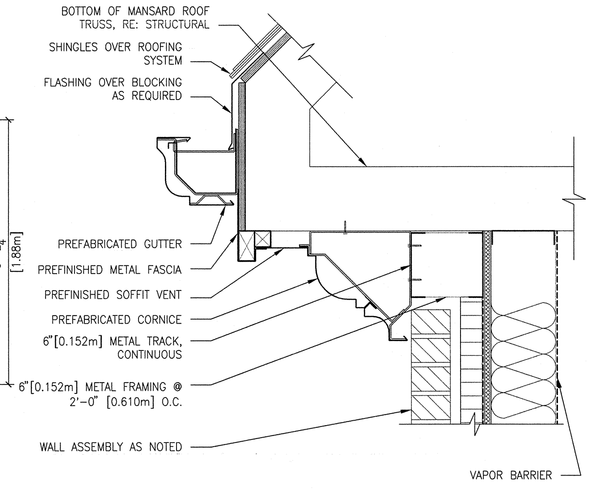

5 CORNICE/ GUTTER DETAIL
SCALE 1 1/2" = 1'-0"

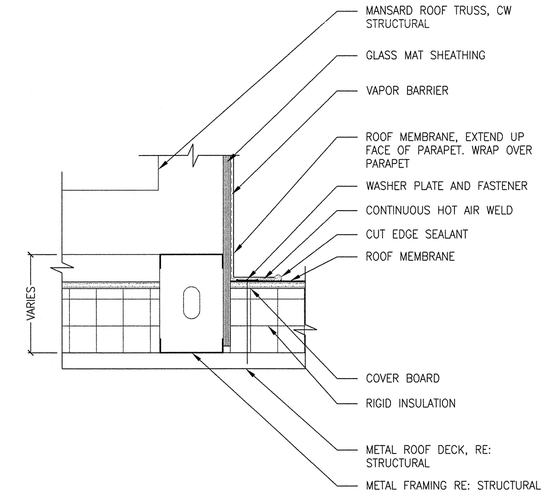

6 TRUSS/ ROOF CONNECTION
SCALE 1 1/2" = 1'-0"

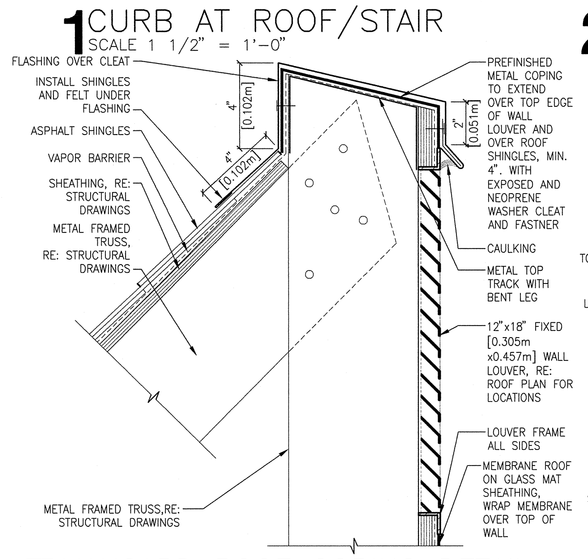

7 MANSARD ROOF COPING DETAIL
SCALE: 3" = 1'-0"

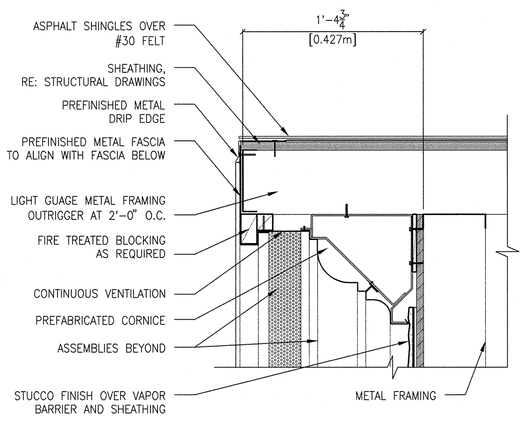

8 FASCIA/CORNICE AT GABLE
SCALE 1 1/2" = 1'-0"

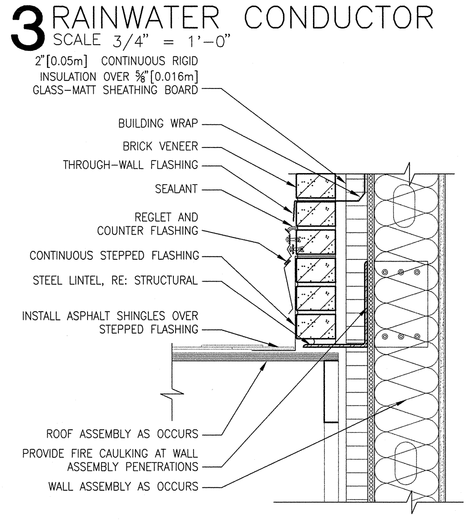

9 SLOPED FLASHING
SCALE 1 1/2" = 1'-0"

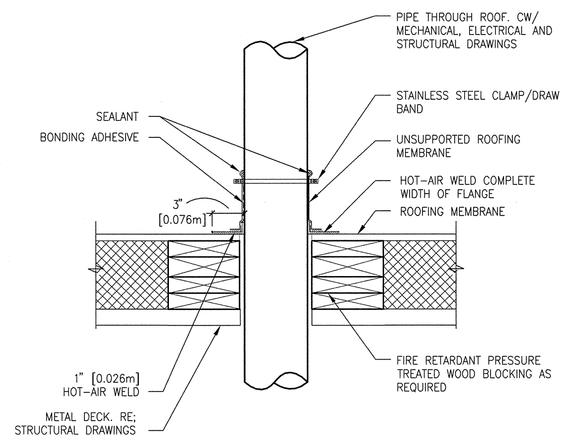

TYPICAL PIPE VENT AT
10 MEMBRANE ROOF
SCALE 1 1/2" = 1'-0"

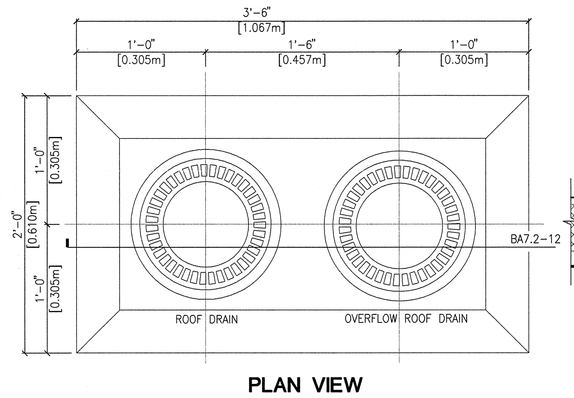

PLAN VIEW

11 ROOF DRAIN / OVERFLOW
SCALE 1 1/2" = 1'-0"

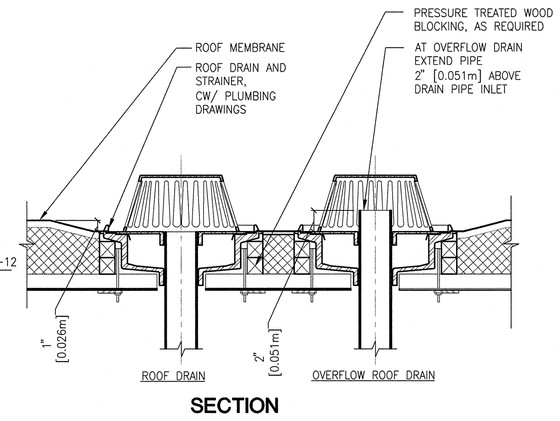

SECTION

12 ROOF DRAIN / OVERFLOW
SCALE 1 1/2" = 1'-0"

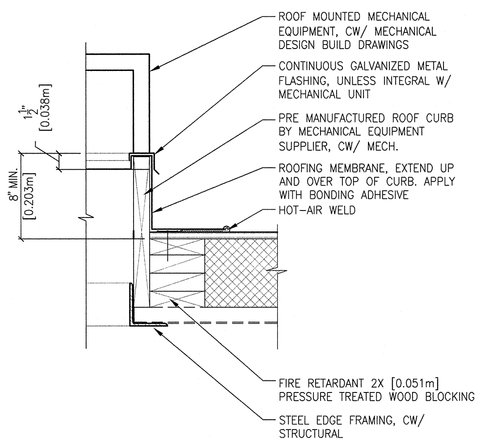

13 MECHANICAL CURB
SCALE: 1 1/2" = 1'-0"

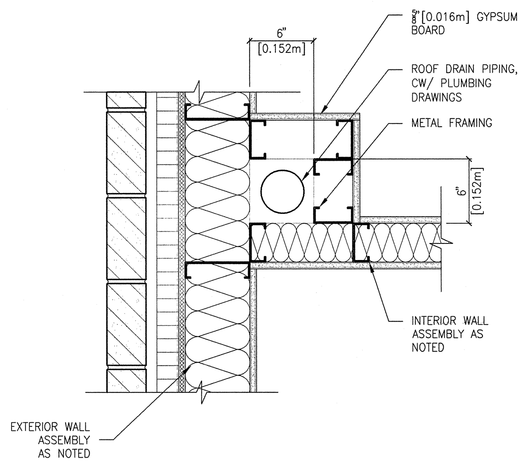

14 WALL DETAIL
SCALE 1 1/2" = 1'-0"

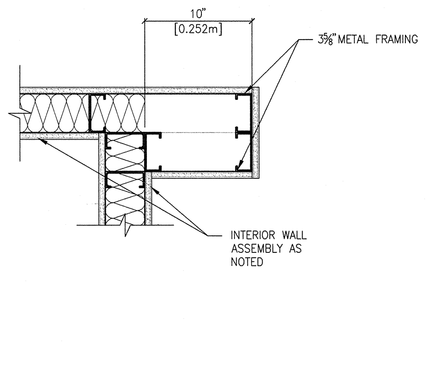

15 WALL DETAIL
SCALE 1 1/2" = 1'-0"

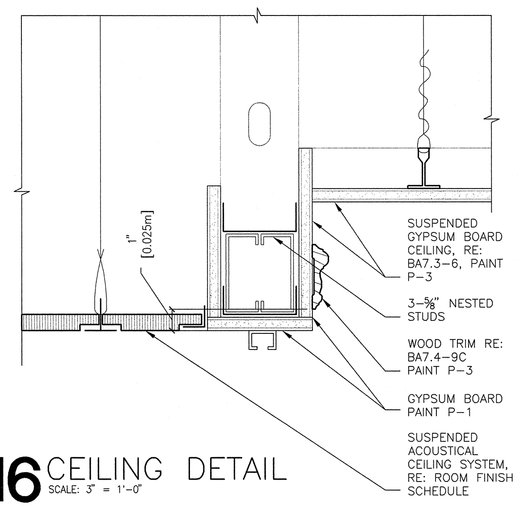

16 CEILING DETAIL
SCALE: 3" = 1'-0"

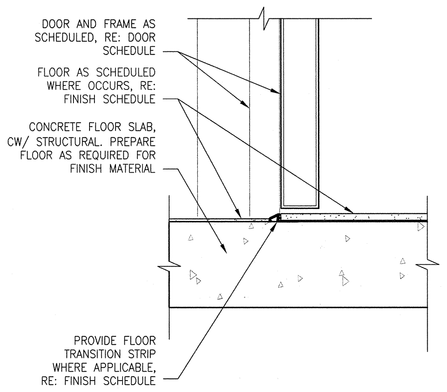

17 DOOR THRESHOLD
SCALE: 3" = 1'-0"

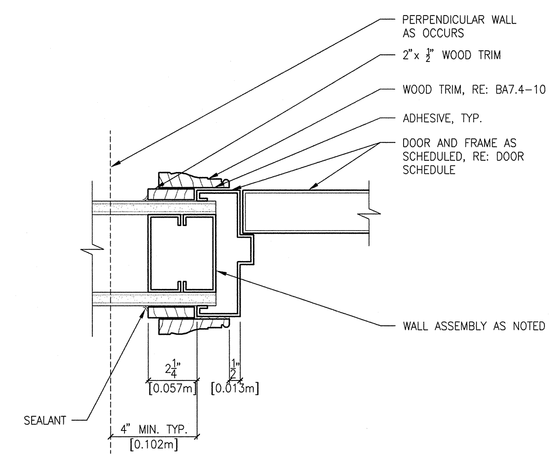

18 DOOR JAMB
SCALE: 3" = 1'-0"

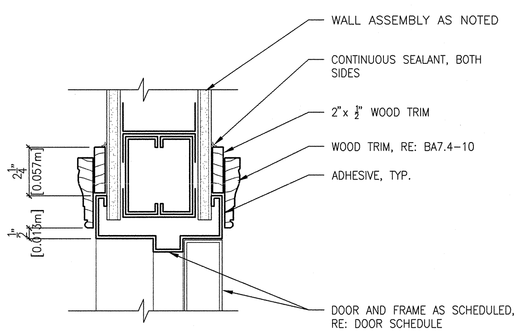

19 DOOR HEAD
SCALE: 3" = 1'-0"

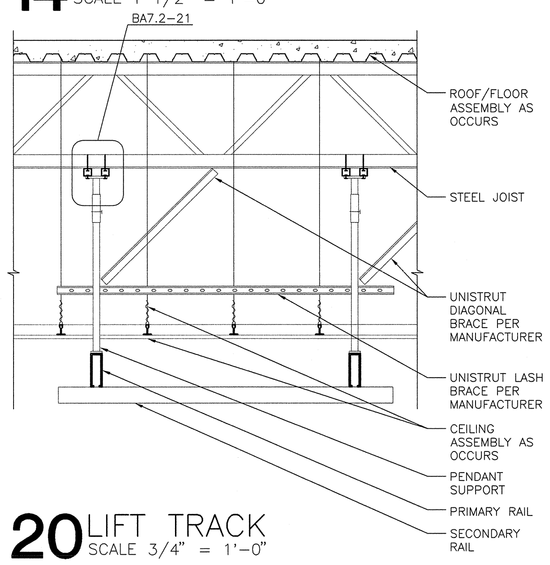

20 LIFT TRACK
SCALE 3/4" = 1'-0"

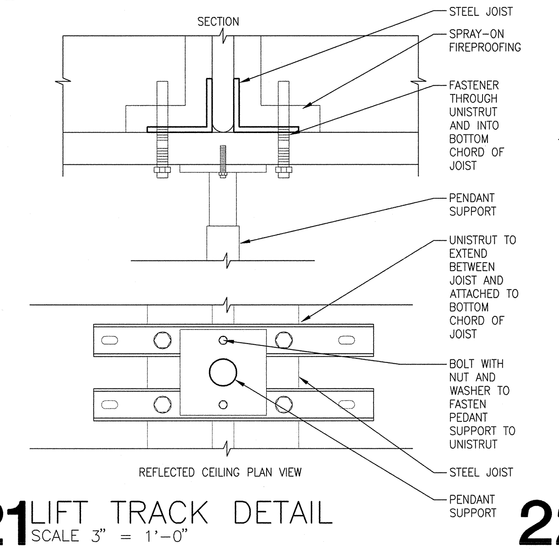

21 LIFT TRACK DETAIL
SCALE 3" = 1'-0"

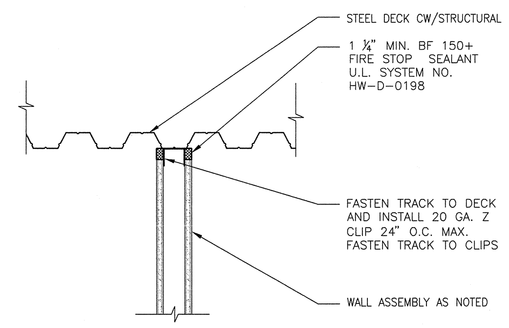

RATED WALL
22 PARALLEL TO FLUTES
SCALE 1 1/2" = 1'-0"

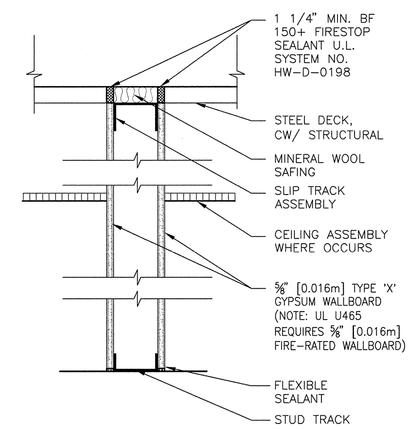

RATED WALL
23 PERPENDICULAR TO FLUTES
SCALE 1 1/2" = 1'-0"

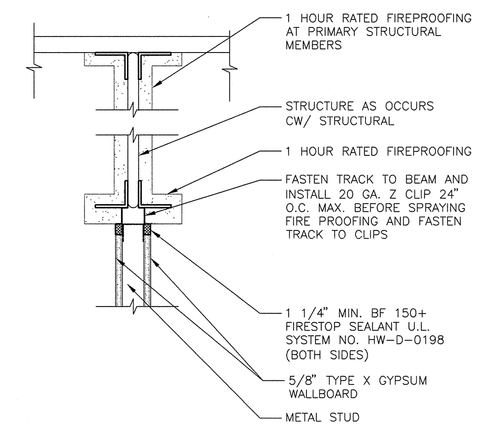

RATED WALL
24 UNDER STRUCTURE
SCALE 1 1/2" = 1'-0"

REVISIONS	DATE

CSHQA
C.W. MOORE PLAZA
250 S. 5TH ST. BOISE, ID 83702
(208) 343-4635 FAX (208) 343-1858
http://www.cshqa.com

JOHN D. MAULIN, ARCHITECT
C.W. MOORE PLAZA
250 S. 5TH ST
BOISE, IDAHO
PHONE: 208-343-4635 FAX: 208-343-1858

THESE DRAWINGS AND SPECIFICATIONS, AS INSTRUMENTS OF SERVICE, ARE AND SHALL REMAIN THE PROPERTY OF THE ARCHITECT / ENGINEER WHETHER THE PROJECT FOR WHICH THEY ARE MADE IS EXECUTED OR NOT. THESE DRAWINGS AND SPECIFICATIONS SHALL NOT BE USED BY ANY PERSON OR ENTITY ON OTHER PROJECTS, FOR ADDITIONS TO THIS PROJECT, OR COMPLETION OF THIS PROJECT WHEN PHASED WITHOUT THE WRITTEN CONSENT OF CSHQA OR ITS AFFILIATES. Copyright ©2011

STAMP
LICENSED ARCHITECT AR 1706
JOHN D. MAULIN STATE OF IDAHO
DECEMBER 01, 2011
ORIGINAL DOCUMENT SIGNED BY ARCHITECT ON FILE WITH THE OWNER
ORIGINAL SIGNED BY: JOHN D. MAULIN
ORIGINAL DATE SIGNED: DECEMBER 01, 2011

CAD FILE NAME: 531-319_BA7.2.DWG
XREF FILE NAME: 531-319_xB_30X42TLBK.DWG

DRAWING TITLE: BUILDING DETAILS

PROJECT TITLE: BOISE VAMC NEW EXTENDED CARE UNIT BUILDING 'B' CLC

DATE: 12/01/2011
PROJECT NO.: 531-319

APPROVED: CHIEF OF FACILITY MANAGEMENT SERVICE
APPROVED: MEDICAL CENTER DIRECTOR

BUILDING NUMBER	CHECKED	DRAWN
122	DRD/JDM	BKS

LOCATION: VAMC BOISE, IDAHO

DRAWING NO.: BA7.2
DWG 21 OF 78

DEPARTMENT OF VETERANS AFFAIRS

Username: bsmith
Date: Dec 02, 2011 12:36pm
G:\2010\10101.0\Arch\DL_Drawings\531-319_BA7.2.dwg

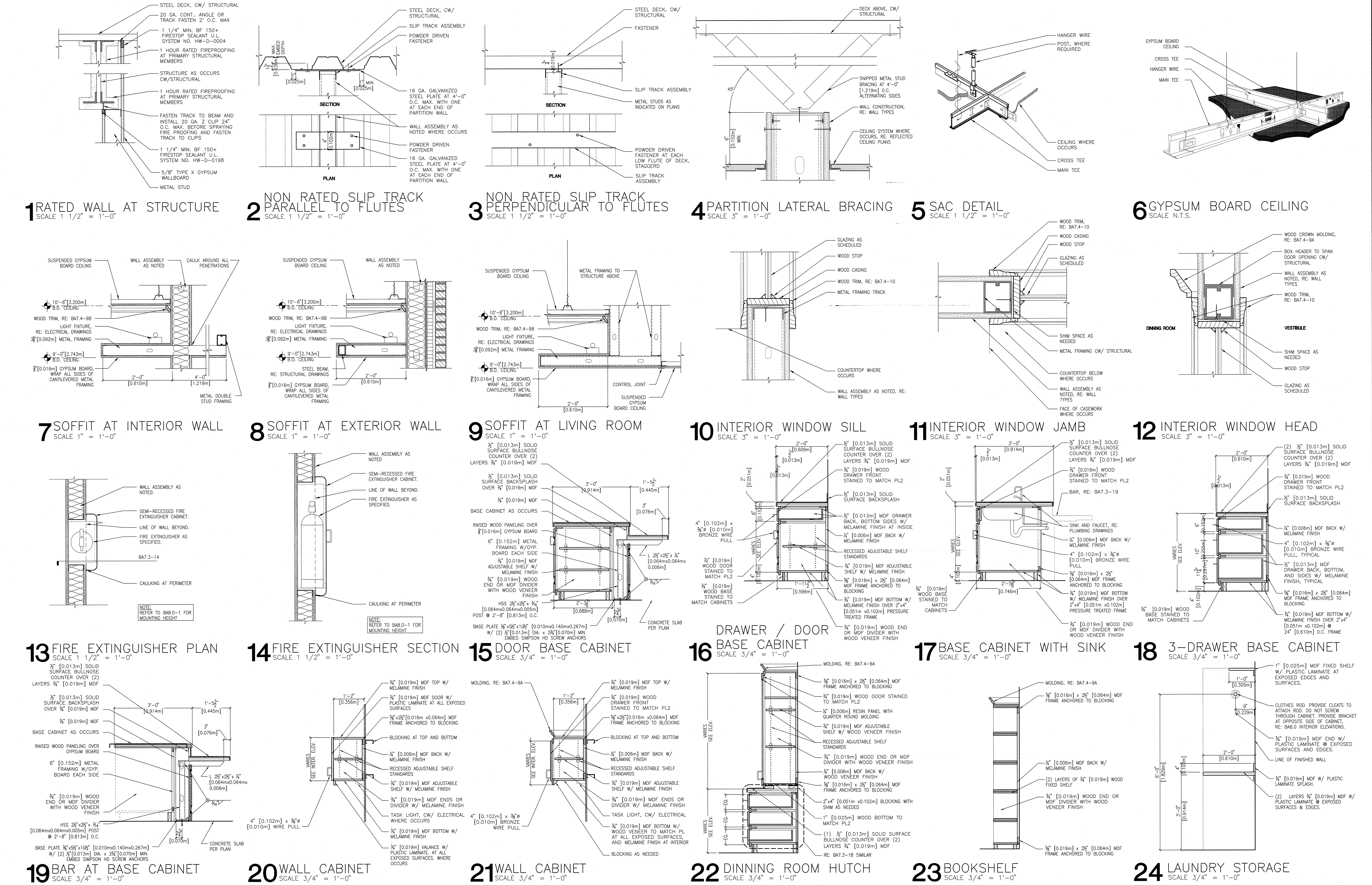

REVISIONS	DATE

CSHQA

C.W. MOORE PLAZA
250 S. 5TH ST. BOISE, ID 83702
(208) 343-4635 FAX (208) 343-1858
http://www.cshqa.com

JOHN D. MAULIN, ARCHITECT
C.W. MOORE PLAZA
250 S. 5TH ST
BOISE, IDAHO
PHONE: 208-343-4635 FAX: 208-343-1858

THESE DRAWINGS AND SPECIFICATIONS, AS INSTRUMENTS OF SERVICE, ARE AND SHALL REMAIN THE PROPERTY OF THE ARCHITECT / ENGINEER WHETHER THE PROJECT FOR WHICH THEY ARE MADE IS EXECUTED OR NOT. THESE DRAWINGS AND SPECIFICATIONS SHALL NOT BE USED BY ANY PERSON OR ENTITY ON OTHER PROJECTS, FOR ADDITIONS TO THIS PROJECT, OR COMPLETION OF THIS PROJECT-WHEN PHASED-WITHOUT THE WRITTEN CONSENT OF CSHQA OR ITS AFFILIATES. Copyright ©2011

STAMP
LICENSED ARCHITECT AR.1706
JOHN D. MAULIN
STATE OF IDAHO
DECEMBER 01, 2011

ORIGINAL DOCUMENT SIGNED BY ARCHITECT ON FILE WITH THE OWNER
ORIGINAL SIGNED BY: JOHN D. MAULIN
ORIGINAL DATE SIGNED: DECEMBER 01, 2011

CAD FILE NAME: 531-319_BA7.3.DWG
XREF FILE NAME: 531-319_xB_30X42TLBK.DWG

DRAWING TITLE: BUILDING DETAILS
APPROVED: CHIEF OF FACILITY MANAGEMENT SERVICE
APPROVED: MEDICAL CENTER DIRECTOR

PROJECT TITLE: BOISE VAMC NEW EXTENDED CARE UNIT BUILDING 'B' CLC

BUILDING NUMBER	CHECKED	DRAWN
122	DRD/JDM	BKS

LOCATION: VAMC BOISE, IDAHO

DATE: 12/01/2011
PROJECT NO. 531-319
DRAWING NO. BA7.3
DWG 22 OF 78

DEPARTMENT OF VETERANS AFFAIRS

Username: bsmith
Dec 02, 2011 - 12:36pm
Q:\2010\10101.0\Arch\02_Drawings\531-319_BA7.3.dwg