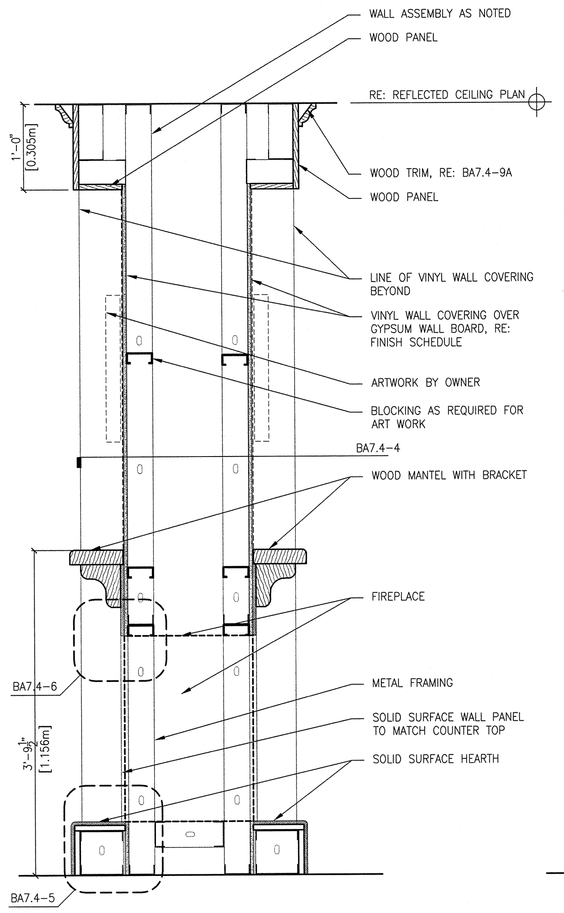

1 SECTION AT FIREPLACE
SCALE 1" = 1'-0"

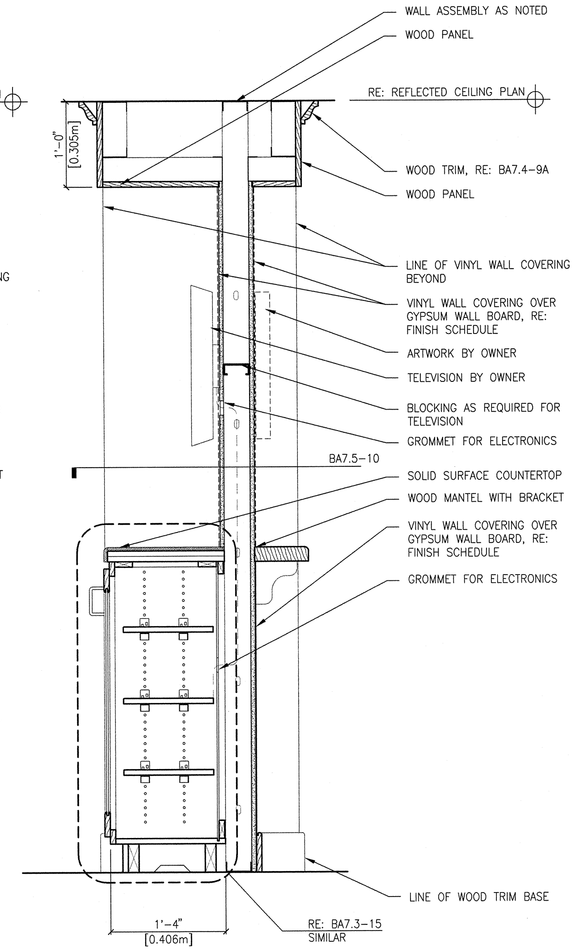

18 SECTION AT ENTERTAINMENT CENTER
SCALE 1" = 1'-0"

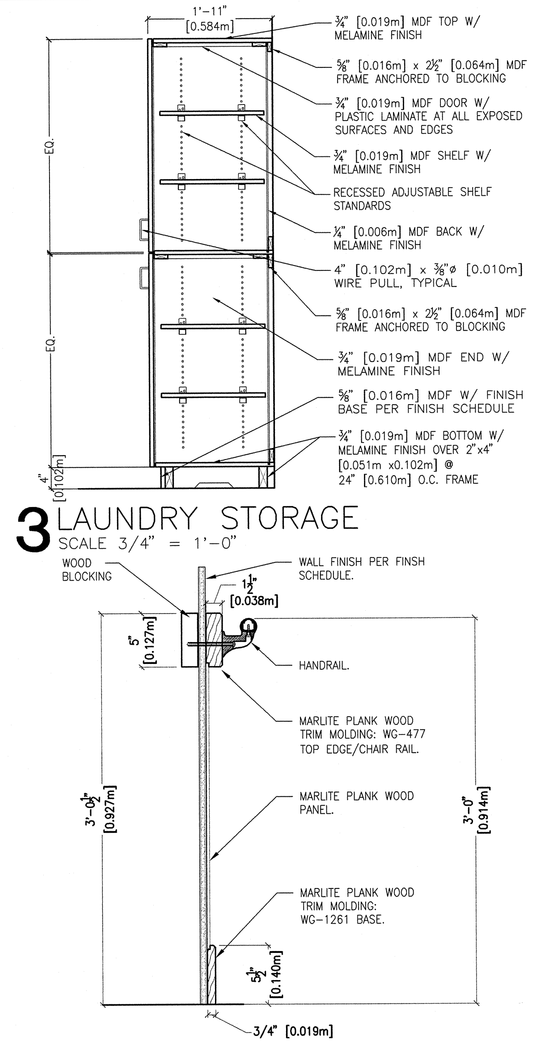

3 LAUNDRY STORAGE
SCALE 3/4" = 1'-0"

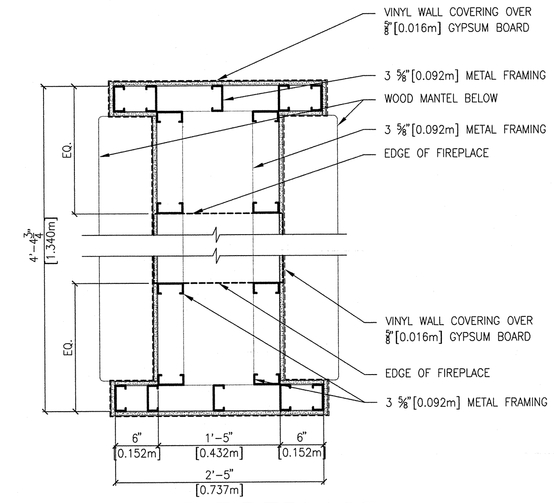

4 PLAN AT FIREPLACE
SCALE 1" = 1'-0"

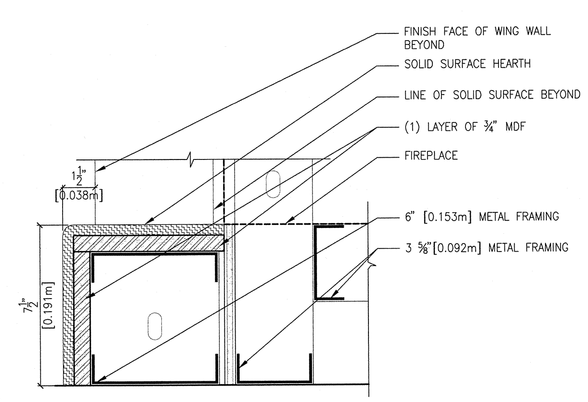

5 DETAIL AT HEARTH
SCALE 3" = 1'-0"

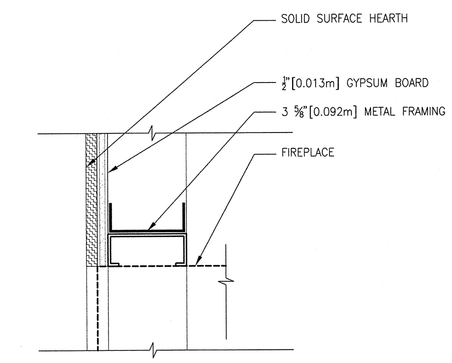

6 DETAIL AT FIREPLACE
SCALE 3" = 1'-0"

7 WAINSCOT W/ HANDRAIL
SCALE 1 1/2" = 1'-0"

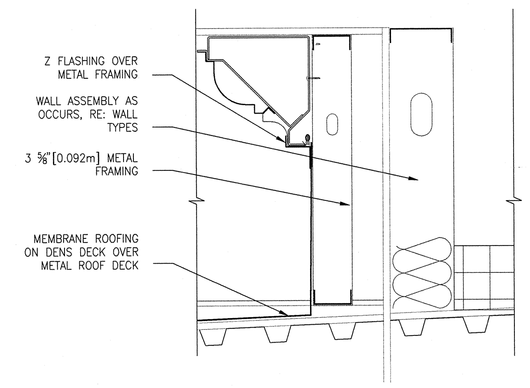

8 CORNICE AT PORCH ROOF
SCALE 1 1/2" = 1'-0"

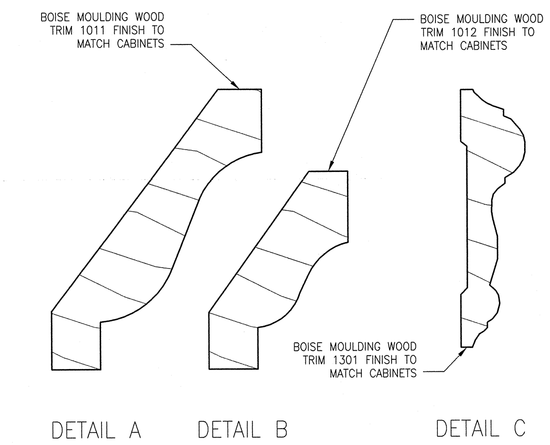

9 WOOD TRIM PROFILE
SCALE: 1'-0" = 1'-0"

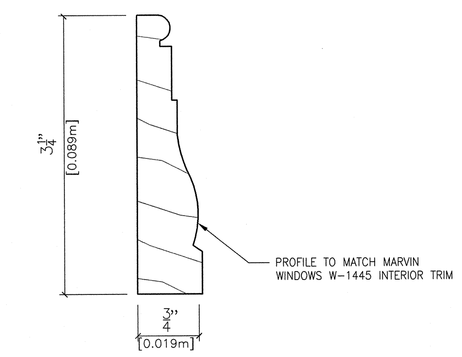

10 WOOD TRIM PROFILE
SCALE: 1'-0" = 1'-0"

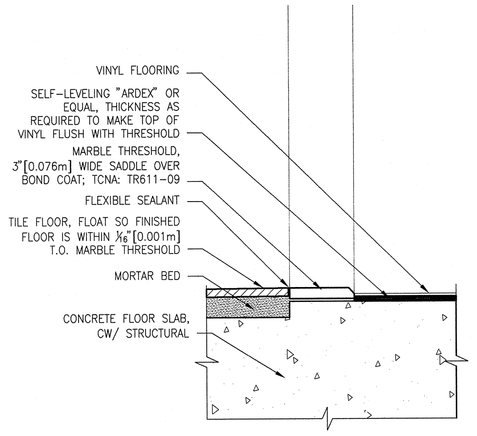

11 MARBLE THRESHOLD
SCALE 3" = 1'-0"

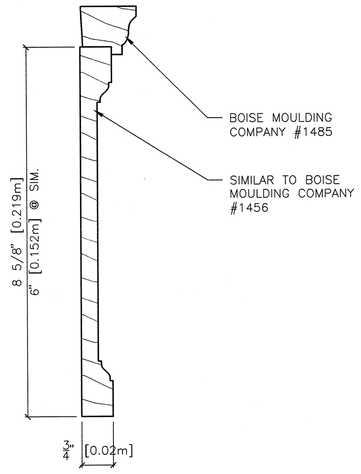

12 WINDOW VALANCE
SCALE 6" = 1'-0"

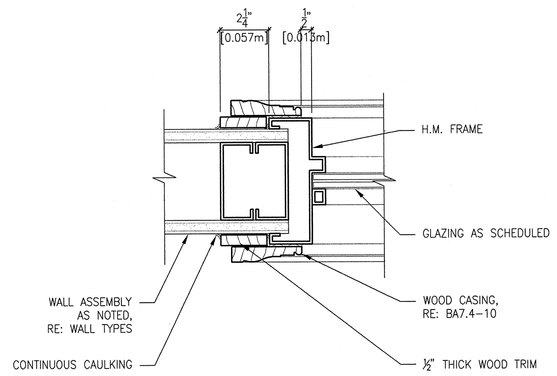

13 RATED WINDOW JAMB
SCALE 3" = 1'-0"
(SILL SIMILAR)

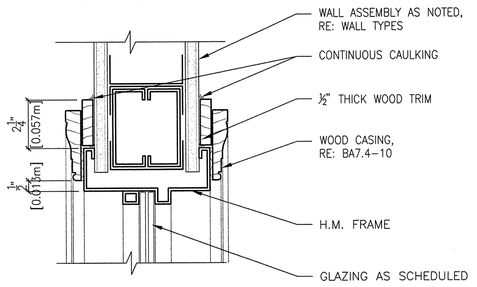

14 RATED WINDOW HEAD
SCALE 3" = 1'-0"

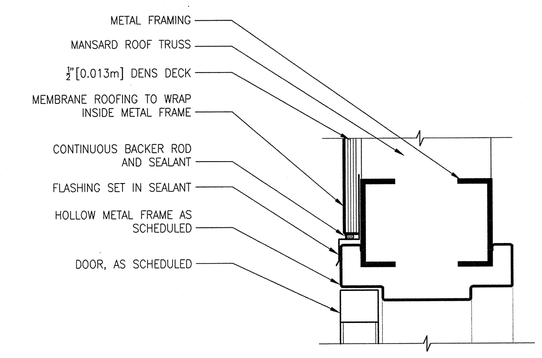

15 H.M. FRAME – HEAD
SCALE 3" = 1'-0"

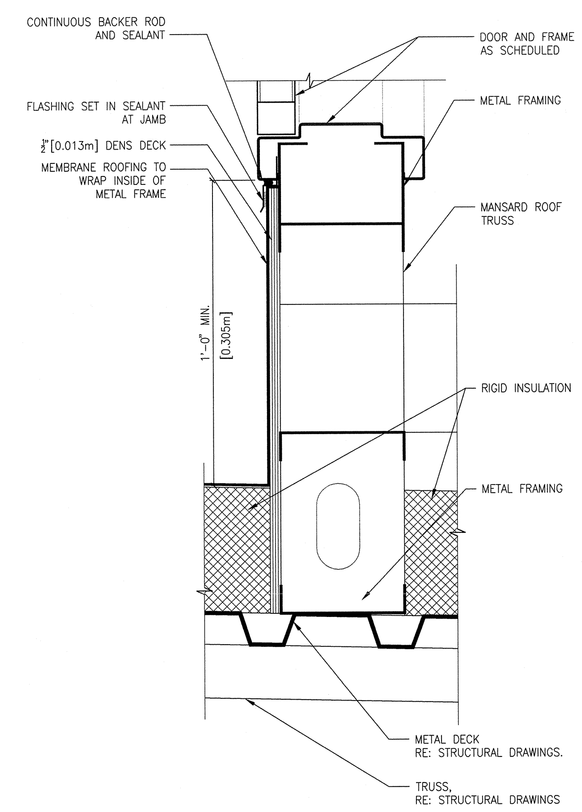

21 H.M. FRAME –THRESHOLD
SCALE 3" = 1'-0"
(JAMB SIMILAR)

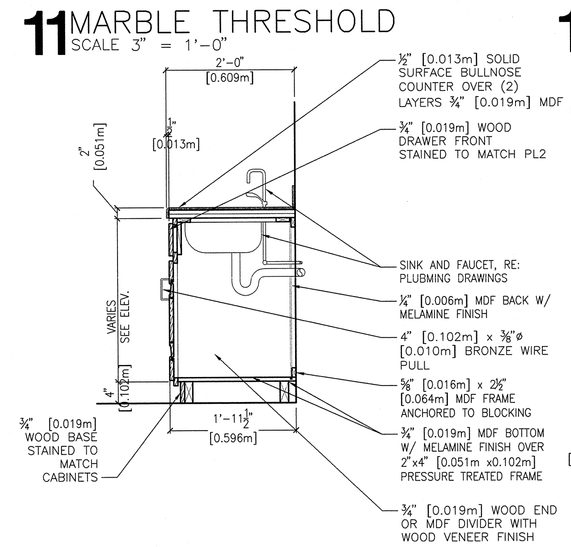

16 BASE CABINET WITH SINK
SCALE 3/4" = 1'-0"

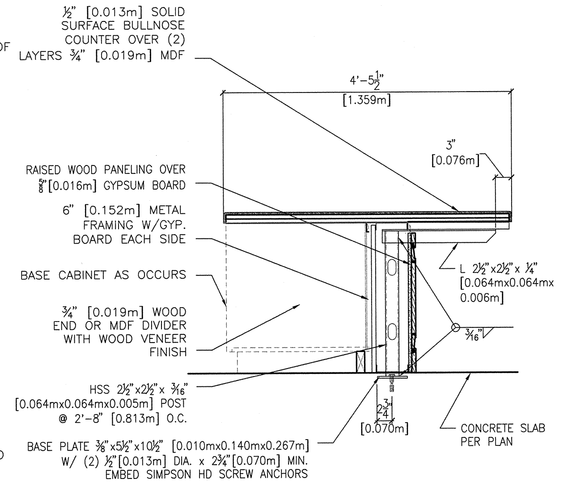

17 BAR AT BASE CABINET
SCALE 3/4" = 1'-0"

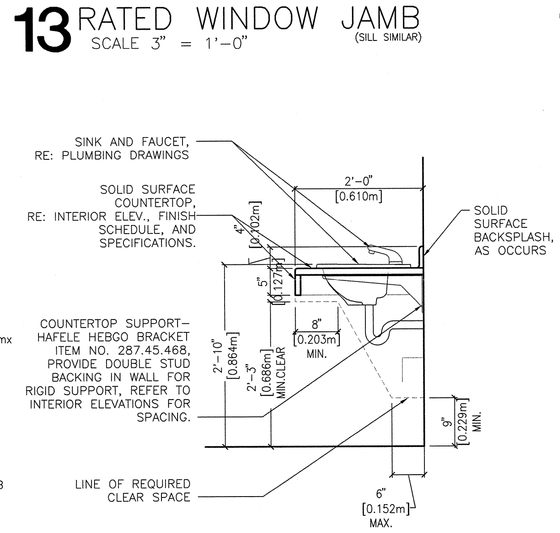

18 COUNTER W/INTEGRAL SINK
SCALE 3/4" = 1'-0"

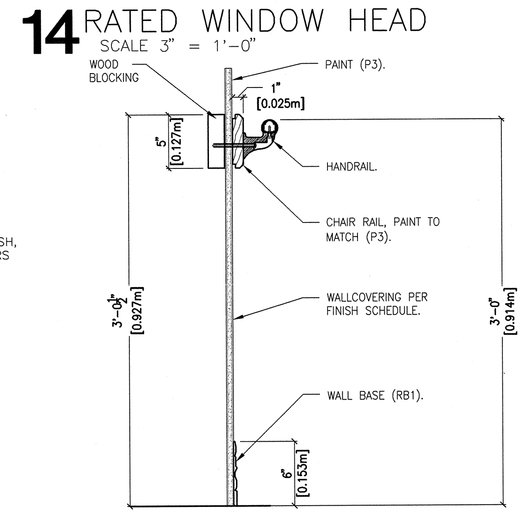

19 HANDRAIL– BASE BID
SCALE 1 1/2" = 1'-0"

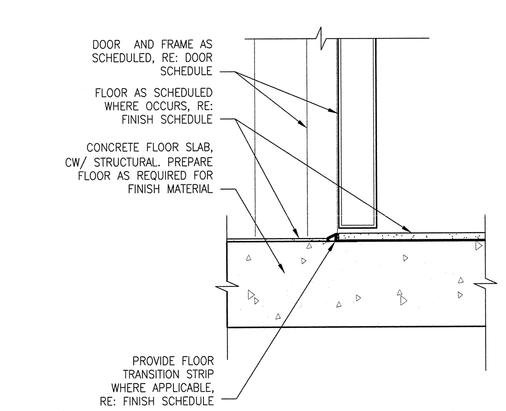

20 DOOR THRESHOLD
SCALE 3" = 1'-0"

REVISIONS | DATE

CSHQA
C.W. MOORE PLAZA
250 S. 5TH ST. BOISE, ID 83702
(208) 343-4635 FAX (208) 343-1858
http://www.cshqa.com

JOHN D. MAULIN, ARCHITECT
C.W. MOORE PLAZA
250 S. 5TH ST
BOISE, IDAHO
PHONE: 208-343-4635 FAX: 208-343-1858

THESE DRAWINGS AND SPECIFICATIONS, AS INSTRUMENTS OF SERVICE, ARE AND SHALL REMAIN THE PROPERTY OF THE ARCHITECT / ENGINEER WHETHER THE PROJECT FOR WHICH THEY ARE MADE IS EXECUTED OR NOT. THESE DRAWINGS AND SPECIFICATIONS SHALL NOT BE USED BY ANY PERSON OR ENTITY ON OTHER PROJECTS, FOR ADDITIONS TO THIS PROJECT, OR COMPLETION OF THIS PROJECT-WHEN PHASED-WITHOUT THE WRITTEN CONSENT OF CSHQA OR ITS AFFILIATES. Copyright ©2011

STAMP
LICENSED ARCHITECT AR-1706
JOHN D. MAULIN STATE OF IDAHO
DECEMBER 01, 2011
ORIGINAL DOCUMENT SIGNED BY ARCHITECT ON FILE WITH THE OWNER
ORIGINAL SIGNED BY: JOHN D. MAULIN
ORIGINAL DATE SIGNED: DECEMBER 01, 2011

CAD FILE NAME: 531-319_BA7.4.DWG
XREF FILE NAME: 531-319_xB_30X42TLBK.DWG

DRAWING TITLE: BUILDING DETAILS
APPROVED: CHIEF OF FACILITY MANAGEMENT SERVICE
APPROVED: MEDICAL CENTER DIRECTOR

PROJECT TITLE: BOISE VAMC NEW EXTENDED CARE UNIT BUILDING 'B' CLC
BUILDING NUMBER: 122
CHECKED: DRD/JDM
DRAWN: BKS
LOCATION: VAMC BOISE, IDAHO

DATE: 12/01/2011
PROJECT NO. 531-319
DRAWING NO. BA7.4
DWG 23 OF 78

DEPARTMENT OF VETERANS AFFAIRS

Username:bsmith
Dec 02, 2011 – 12:36pm
Q:\2010\10101.0\Arch\02_Drawings\531-319_BA7.4.dwg

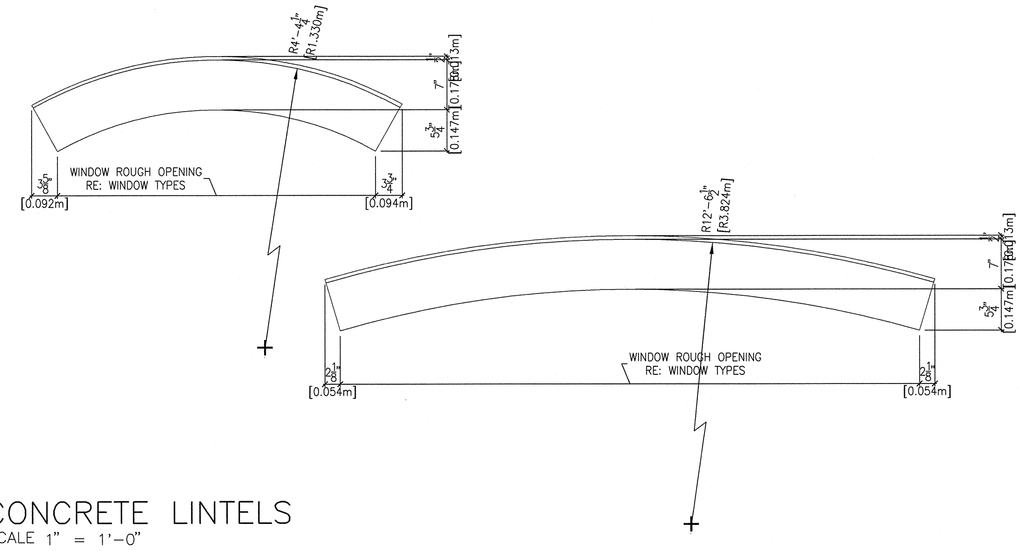

1 CONCRETE LINTELS
SCALE 1" = 1'-0"

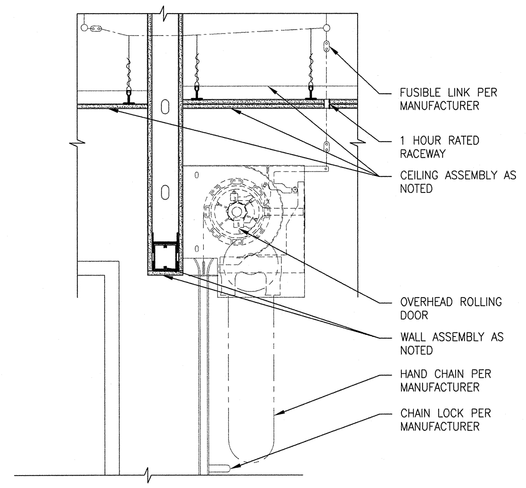

2 HEAD AT ROLLING DOOR
SCALE 1" = 1'-0"

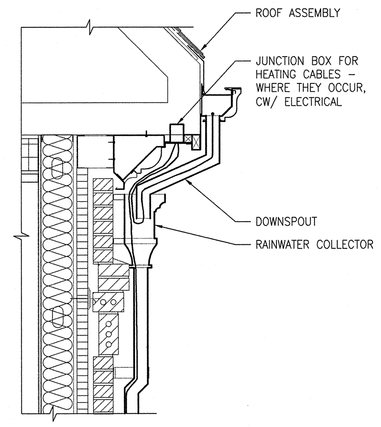

3 JUNCTION BOX AT GUTTER
SCALE 3/4" = 1'-0"

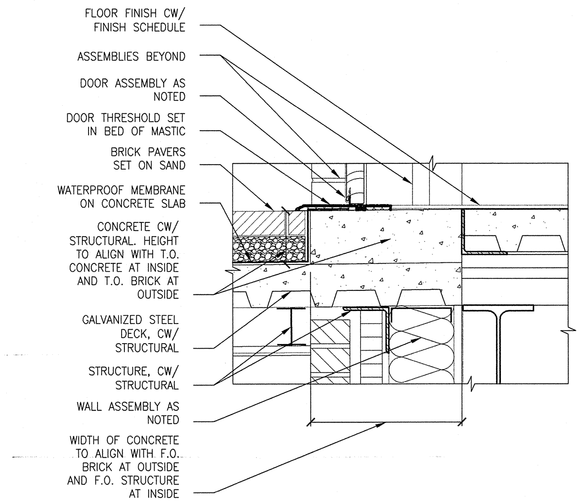

4 THRESHOLD AT DOOR
SCALE 1 1/2" = 1'-0"

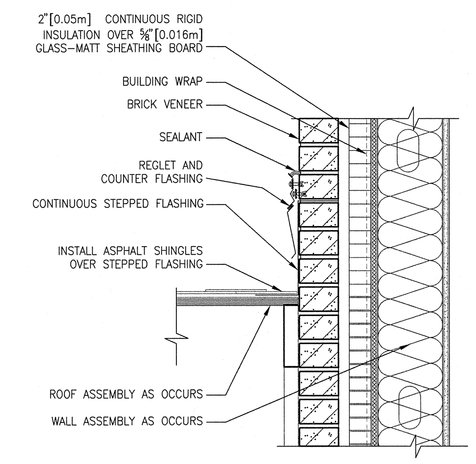

5 SLOPED FLASHING
SCALE 1 1/2" = 1'-0"

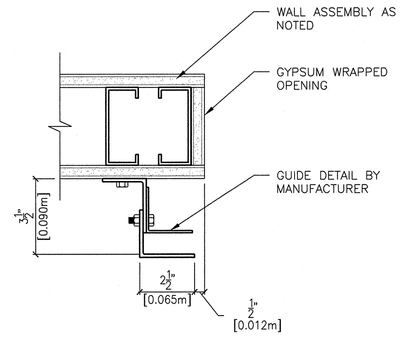

6 JAMB AT ROLLING DOOR
SCALE 3" = 1'-0"

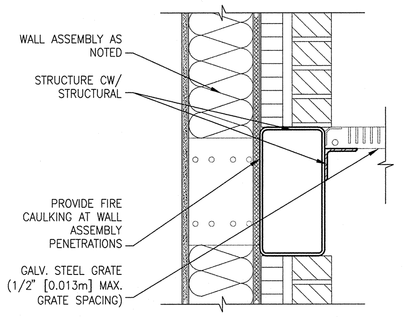

7 SUPPORT AT GRATING
SCALE 1 1/2" = 1'-0"

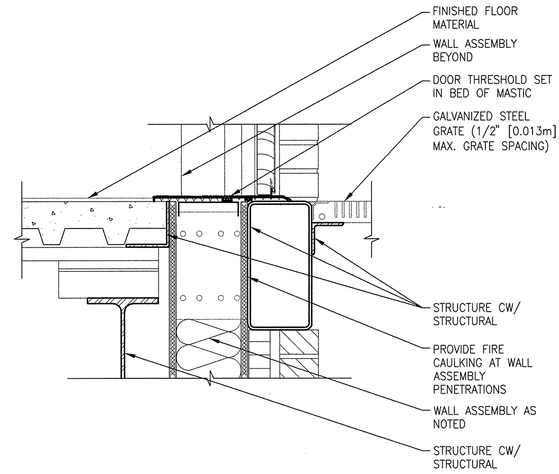

8 THRESHOLD AT GRATING
SCALE 1 1/2" = 1'-0"

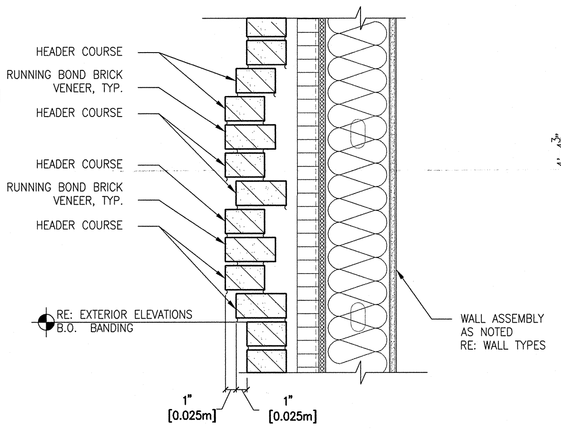

9 LOWER BRICK BANDING AT OUTSIDE CORNERS
SCALE 1 1/2" = 1'-0"

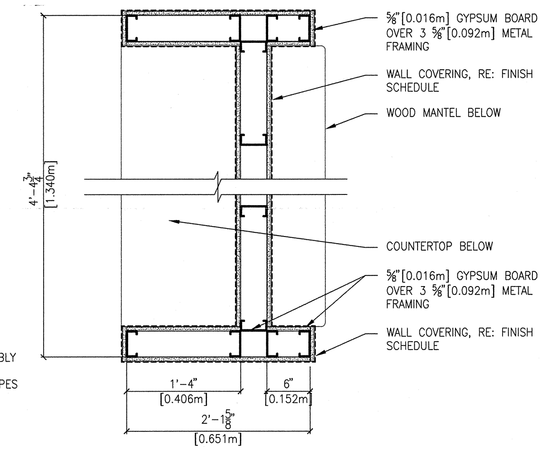

10 PLAN OF ENTERTAINMENT CENTER
SCALE 1" = 1'-0"

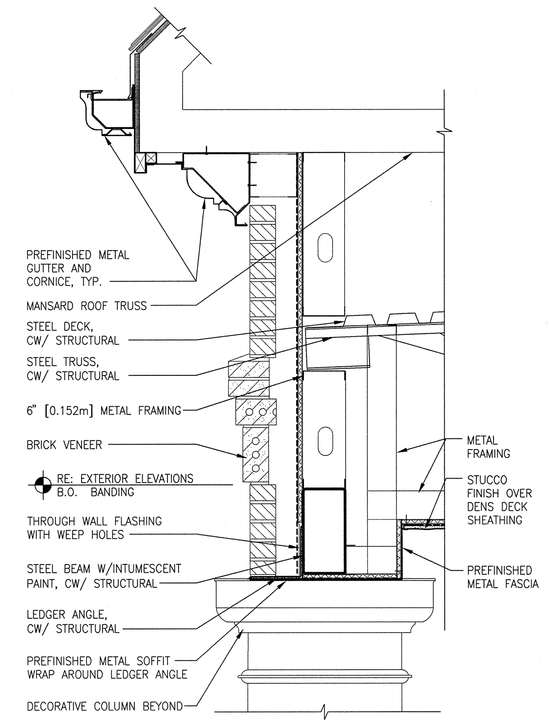

11 SOFFIT FRAMING AT FRONT CANOPY
SCALE 1" = 1'-0"

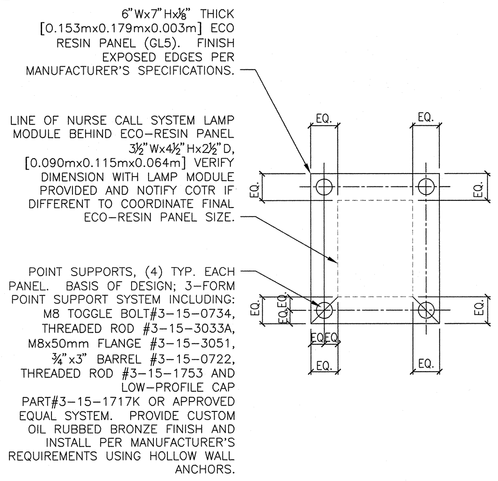

12 ECO-RESIN PANEL
SCALE 3" = 1'-0"

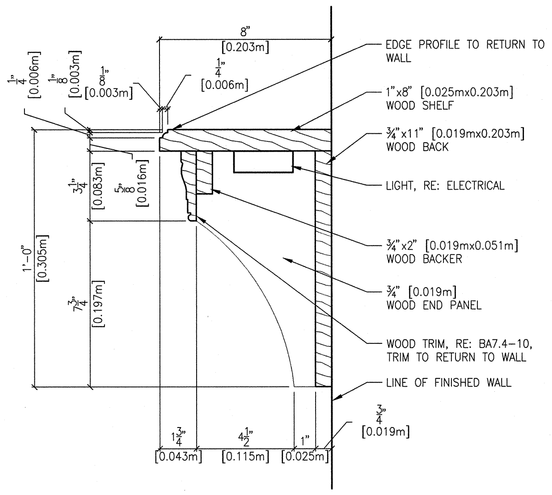

13 MEMORY SHELF W/ LIGHT
SCALE 3" = 1'-0"

Username: tmontgomery
Dec 05, 2011 – 2:34pm
Q:\2010\10101.0\Sketch\02_Drawings\531-319_BA7.5.dwg

REVISIONS	DATE

CSHQA
C.W. MOORE PLAZA
250 S. 5TH ST. BOISE, ID 83702
(208) 343-4635 FAX (208) 343-1858
http://www.cshqa.com

JOHN D. MAULIN, ARCHITECT
C.W. MOORE PLAZA
250 S. 5TH ST
BOISE, IDAHO
PHONE: 208-343-4635 FAX: 208-343-1858

THESE DRAWINGS AND SPECIFICATIONS, AS INSTRUMENTS OF SERVICE, ARE AND SHALL REMAIN THE PROPERTY OF THE ARCHITECT / ENGINEER WHETHER THE PROJECT FOR WHICH THEY ARE MADE IS EXECUTED OR NOT. THESE DRAWINGS AND SPECIFICATIONS SHALL NOT BE USED BY ANY PERSON OR ENTITY ON OTHER PROJECTS, FOR ADDITIONS TO THIS PROJECT, OR COMPLETION OF THIS PROJECT WHEN PHASED WITHOUT THE WRITTEN CONSENT OF CSHQA OR ITS AFFILIATES. Copyright ©2011

STAMP
LICENSED ARCHITECT AR.1706
JOHN D. MAULIN STATE OF IDAHO
DECEMBER 01, 2011
ORIGINAL DOCUMENT SIGNED BY ARCHITECT ON FILE WITH THE OWNER
ORIGINAL SIGNED BY: JOHN D. MAULIN
ORIGINAL DATE SIGNED: DECEMBER 01, 2011

CAD FILE NAME: 531-319_BA7.5.DWG
XREF FILE NAME: 531-319_xB_30X42TLBK.DWG

DRAWING TITLE: BUILDING DETAILS

APPROVED: CHIEF OF FACILITY MANAGEMENT SERVICE
APPROVED: MEDICAL CENTER DIRECTOR

PROJECT TITLE: BOISE VAMC NEW EXTENDED CARE UNIT BUILDING 'B' CLC

BUILDING NUMBER	CHECKED	DRAWN
122	DRD/JDM	BKS

LOCATION: VAMC BOISE, IDAHO

DATE: 12/01/2011
PROJECT NO.: 531-319
DRAWING NO.: BA7.5
DWG 24 OF 78

DEPARTMENT OF VETERANS AFFAIRS

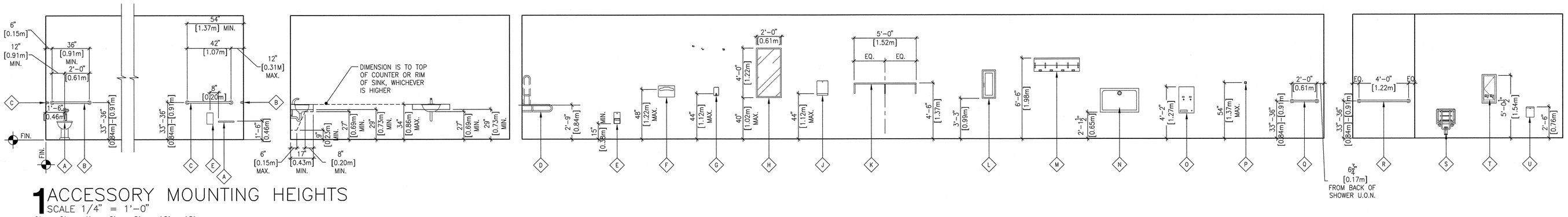

1 ACCESSORY MOUNTING HEIGHTS
SCALE 1/4" = 1'-0"

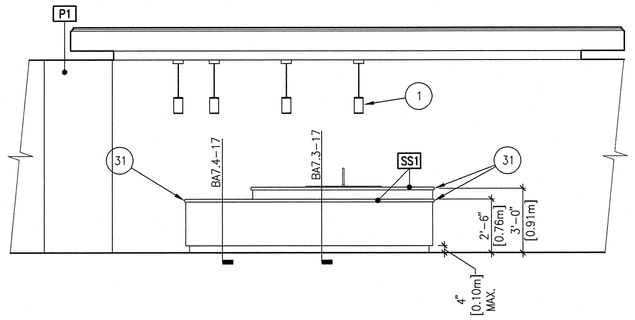

2 DINING – 102,202
SCALE 1/4" = 1'-0"

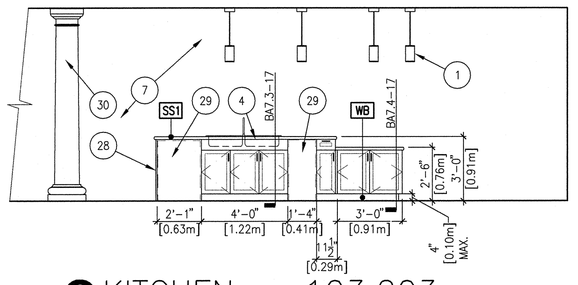

3 KITCHEN – 103,203
SCALE 1/4" = 1'-0"

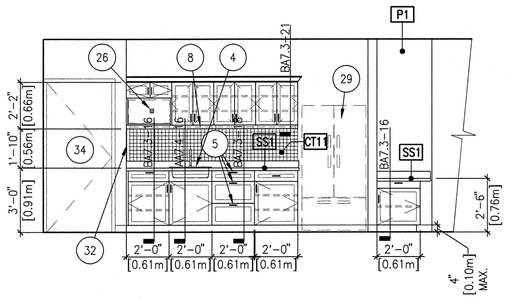

4 KITCHEN – 103,203
SCALE 1/4" = 1'-0"

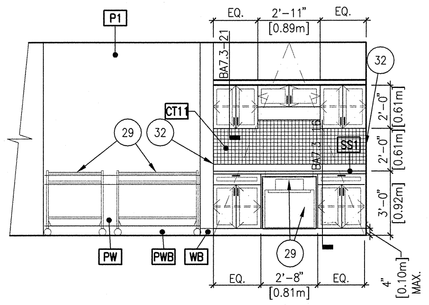

5 KITCHEN – 103,203
SCALE 1/4" = 1'-0"

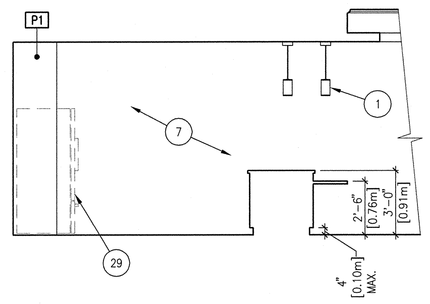

6 KITCHEN – 103,203
SCALE 1/4" = 1'-0"

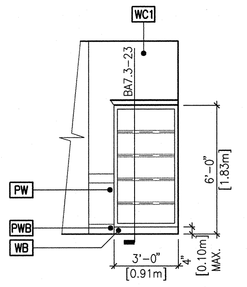

7 LIVING ROOM – 130,230
SCALE 1/4" = 1'-0"

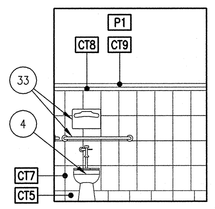

8 PUB. TOILET – 122
SCALE 1/4" = 1'-0"

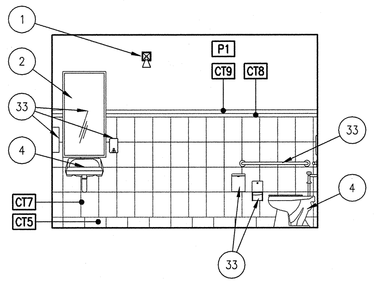

9 PUB. TOILET – 122
SCALE 1/4" = 1'-0"

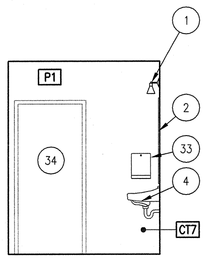

10 PUB. TOILET – 122
SCALE 1/4" = 1'-0"

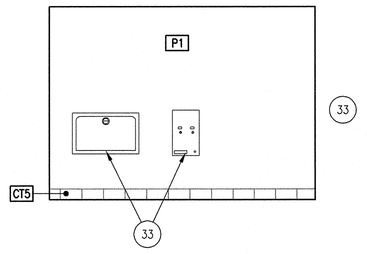

11 PUB. TOILET – 122
SCALE 1/4" = 1'-0"

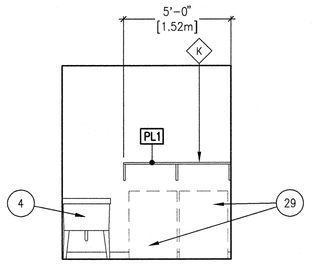

12 LAUNDRY – 117,217
SCALE 1/4" = 1'-0"

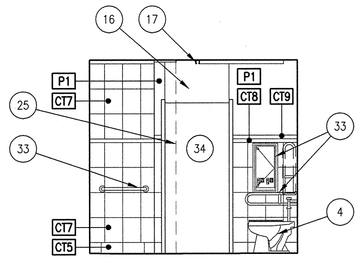

13 BATH – TYP.
SCALE 1/4" = 1'-0"

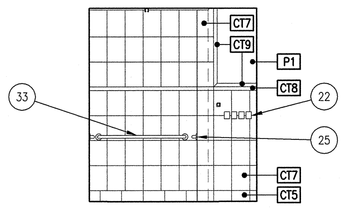

14 BATH – TYP.
SCALE 1/4" = 1'-0"

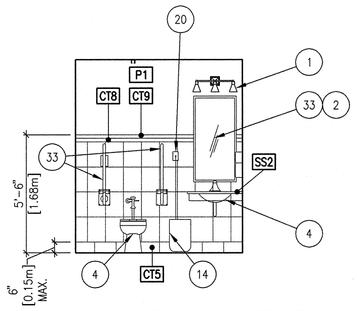

15 BATH – TYP.
SCALE 1/4" = 1'-0"

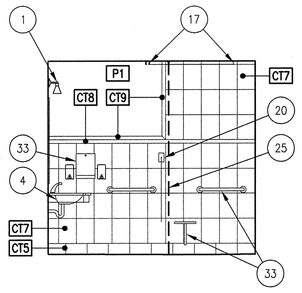

16 BATH – TYP.
SCALE 1/4" = 1'-0"

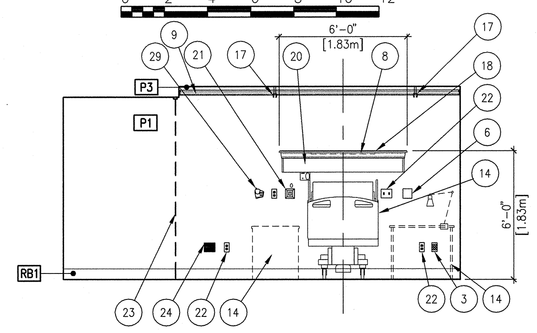

17 BEDROOM – TYP.
SCALE 1/4" = 1'-0"

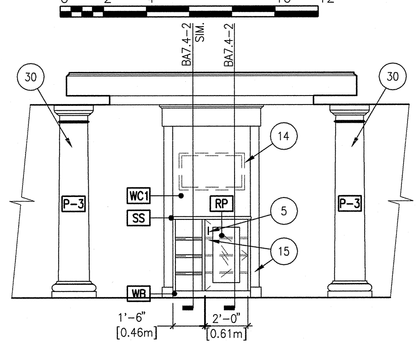

18 LIVING ROOM – 130,230
SCALE 1/4" = 1'-0"

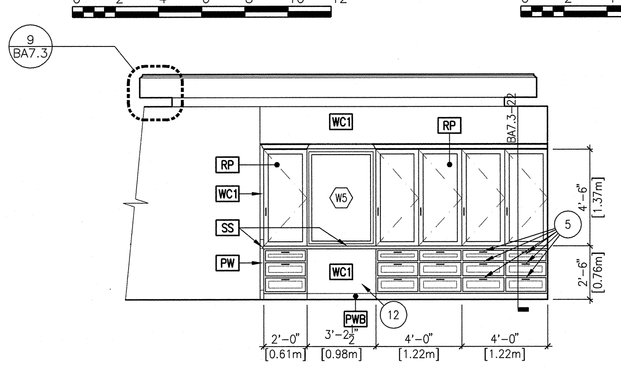

19 DINING – 102,202
SCALE 1/4" = 1'-0"

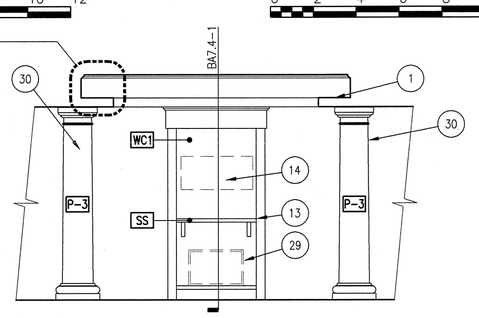

20 LIVING ROOM – 130,230
SCALE 1/4" = 1'-0"

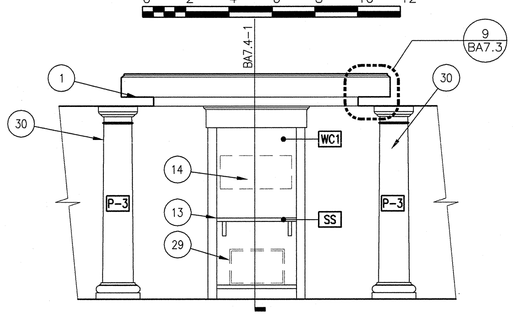

21 LIVING ROOM – 130,230
SCALE 1/4" = 1'-0"

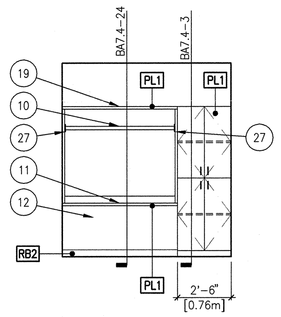

22 LAUNDRY – 117,217
SCALE 1/4" = 1'-0"

GENERAL NOTES:

A. RE: BA1.2 AND BA1.3 FOR WALL TYPES DIMENSION PLANS.

B. RE: BA6.2 AND BA6.3 FOR FURNITURE AND EQUIPMENT PLANS.

C. RE: BA6.4 AND BA6.5 FOR DOOR SCHEDULES AND WINDOW TYPES.

D. RE: BA6.0 AND BA6.1 FOR FINISH SCHEDULE.

E. CONTRACTOR SHALL PROVIDE BLOCKING OR BACKING FOR ALL WALL–MOUNTED ACCESSORIES AND EQUIPMENT. ASSURE THAT ALL REQUIRED BACKING IS INSTALLED IN WALLS PRIOR TO INSTALLING DRYWALL. THIS INCLUDES BACKING FOR WALL–MOUNTED DOORSTOPS. WOOD BLOCKING/BACKING TO BE FIRE TREATED.

F. PROVIDE MOISTURE RESISTANT GYPSUM WALLBOARD AT ALL AREAS EXPOSED TO MOISTURE.

G. PROVIDE 'J' TRIM AT ALL GYPSUM BOARD TRANSITIONS TO DISSIMILAR MATERIALS.

H. RE: BA9.0 AND BA9.1 FOR REFLECTED CEILING PLANS.

I. THE HINGE SIDE OF DOOR FRAMES SHALL BE MOUNTED 4" MIN. FROM ADJACENT PERPENDICULAR WALL UNLESS NOTED OTHERWISE.

J. PROVIDE INSULATED COVERS AT ALL EXPOSED PIPING UNDER LAVATORIES.

K. FIELD VERIFY ALL DIMENSIONS PRIOR TO FABRICATION OF CASEWORK.

L. MIRRORS ARE TO BE CENTERED OVER THE SINKS.

M. VERIFY ALL MILLWORK LOCKING REQUIREMENTS PRIOR TO INSTALLATION.

N. EXPOSED SURFACES ARE DEFINED AS ANYTHING THAT CAN BE SEEN WITH THE DOORS AND DRAWERS CLOSED. THIS INCLUDES THE UNDER SIDE AND TOP OF WALL MOUNTED CABINETS (INCLUDING SCRIBES AND FILLER PANELS), ALL SURFACES OF COUNTER SUPPORTS, AND ALL OPEN CABINET SHELVES AND SURFACES.

SHEET NOTES:

1. LIGHT FIXTURE, CW/ ELECTRICAL.
2. PROVIDE SPACER BEHIND MIRROR TO MATCH THICKNESS OF TILES.
3. DATA OUTLET, RE: ELECTRICAL.
4. PLUMBING FIXTURE, CW/ PLUMBING.
5. CABINET LOCK.
6. LIFT CONTROL CHARGER, CW/ELECTRICAL.
7. OPEN TO BEYOND.
8. UNDER CABINET LIGHTING, CW/ ELECTRICAL.
9. WOOD TRIM, RE: BA7.4–9C.
10. CLOTHES ROD ASSEMBLY.
11. COUNTER TOP ASSEMBLY.
12. OPEN KNEE SPACE.
13. WOOD MANTLE W/ BRACKETS.
14. FURNITURE, RE: FURNITURE SCHEDULE.
15. WOOD FINISH AT EXPOSED SURFACES, TYPICAL.
16. OPEN ABOVE DOOR ASSEMBLY FOR PASSAGE OF PATIENT LIFT SYSTEM.
17. PATIENT LIFT TRACK ASSEMBLY.
18. MEMORY SHELF WITH TASKLIGHT, RE: BA7.5–13.
19. FIXED SHELF 12" DEEP.
20. NURSE CALL, RE: ELECTRICAL.
21. MEDICAL OXYGEN OULET, RE: MECHANICAL.
22. ELECTRICAL DEVICE, RE: ELECTRICAL.
23. PRIVACY CURTAIN. CEILING MOUNTED.
24. NIGHT LIGHT. RE: ELECTRICAL.
25. SHOWER CURTAIN, CEILING MOUNTED.
26. MICROWAVE, RE: EQUIPMENT SCHEDULE; PROVIDE ELECTRICAL OUTLET RECESSED INTO WALL FOR MICROWAVE CW/ ELECTRICAL.
27. CLEAT, RE: BA7.3–24
28. ½" WOOD END PANEL.
29. EQUIPMENT RE: EQUIPMENT SCHEDULE.
30. PRE MANUFACTURED COLUMN ASSEMBLY.
31. RADIUS COUNTER TOP. RE: PLAN.
32. WRAP CT FINISH ON SIDE WALL ABOVE COUNTERTOP.
33. ACCESSORY RE: ENLARGED PLANS AND BA8.0–1.
34. DOOR/FRAME ASSEMBLY, RE: BA6.4 AND BA6.5.

FIXTURE LEGEND:

A. WATER CLOSET, CW/ PLUMBING
B. 36" STAINLESS STEEL GRAB BAR
C. 42" STAINLESS STEEL GRAB BAR
D. FOLD–UP STAINLESS STEEL GRAB BAR
E. TOILET PAPER DISPENSER (V.C.)
F. SEAT COVER DISPENSER (V.C.)
G. SOAP DISPENSER (V.C.)
H. MIRROR
J. PAPER TOWEL DISPENSER (V.C.)
K. 5'–0" WIDE x 12" DEEP STAINLESS STEEL SHELF
L. SEMI–RECESSED FIRE EXTINGUISHER CABINET
M. SHELF WITH MOP AND BROOM HOLDERS AND HOOKS
N. SURFACE–MOUNTED BABY CHANGING STATION (V.C.)
O. SURFACE–MOUNTED SANITARY NAPKIN DISPENSER (V.C.)
P. ROBE HOOK
Q. 24" STAINLESS STEEL GRAB BAR
R. 48" STAINLESS STEEL GRAB BAR
S. FOLD–UP SHOWER SEAT
T. SEMI–RECESSED SANITARY NAPKIN DISPENSER (V.C.)
U. NAPKIN DISPOSAL (V.C.)

REVISIONS | DATE

CSHQA
C.W. MOORE PLAZA
250 S. 5TH ST. BOISE, ID 83702
(208) 343-4635 FAX (208) 343-1858
http://www.cshqa.com

JOHN D. MAULIN, ARCHITECT
C.W. MOORE PLAZA
250 S. 5TH ST
BOISE, IDAHO
PHONE: 208-343-4635 FAX: 208-343-1858

THESE DRAWINGS AND SPECIFICATIONS, AS INSTRUMENTS OF SERVICE, ARE AND SHALL REMAIN THE PROPERTY OF THE ARCHITECT / ENGINEER WHETHER THE PROJECT FOR WHICH THEY ARE MADE IS EXECUTED OR NOT. THESE DRAWINGS AND SPECIFICATIONS SHALL NOT BE USED BY ANY PERSON OR ENTITY ON OTHER PROJECTS, FOR ADDITIONS TO THIS PROJECT, OR COMPLETION OF THIS PROJECT WHEN PHASED WITHOUT THE WRITTEN CONSENT OF CSHQA OR ITS AFFILIATES. Copyright ©2011

STAMP
LICENSED ARCHITECT AR.1706
JOHN D. MAULIN STATE OF IDAHO
DECEMBER 01, 2011
ORIGINAL DOCUMENT SIGNED BY ARCHITECT ON FILE WITH THE OWNER ORIGINAL SIGNED BY: JOHN D. MAULIN ORIGINAL DATE SIGNED: DECEMBER 01, 2011

CAD FILE NAME: 531–319_BA8.0.DWG
XREF FILE NAME: 531–319_xA_30X42TLBK.DWG 531–319_xFIXT LGND.DWG

DRAWING TITLE: INTERIOR ELEVATIONS

PROJECT TITLE: BOISE VAMC NEW EXTENDED CARE UNIT BUILDING 'B' CLC

DATE: 12/01/2011
PROJECT NO. 531–319

APPROVED: CHIEF OF FACILITY MANAGEMENT SERVICE
APPROVED: MEDICAL CENTER DIRECTOR

BUILDING NUMBER: 122 | CHECKED: JDM | DRAWN: TM

LOCATION: VAMC BOISE, IDAHO

DRAWING NO. BA8.0
DWG 25 OF 78

DEPARTMENT OF VETERANS AFFAIRS

Username: tmontgomery
Dec 05, 2011 – 9:17am
Q:\20101\101011\Arch\02_Drawings\531–319_BA8.0.dwg

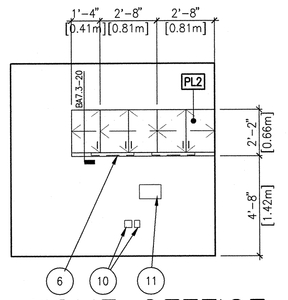

HOME OFFFICE – 1 120,220
SCALE 1/4" = 1'-0"

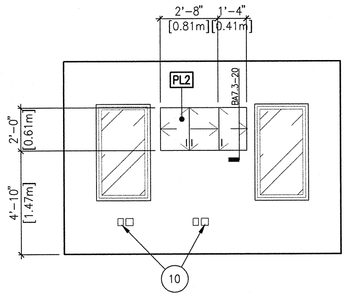

HOME OFFICE – 2 120,220
SCALE 1/4" = 1'-0"

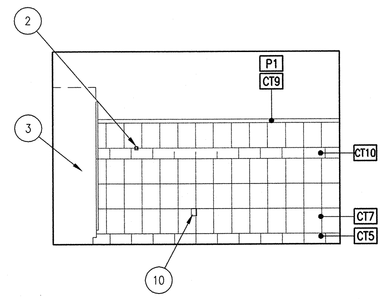

3 SPA – 109,209
SCALE 1/4" = 1'-0"

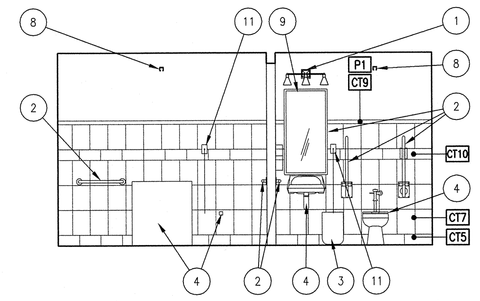

4 SPA – 109,209
SCALE 1/4" = 1'-0"

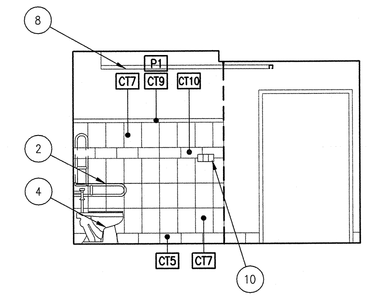

5 SPA – 109,209
SCALE 1/4" = 1'-0"

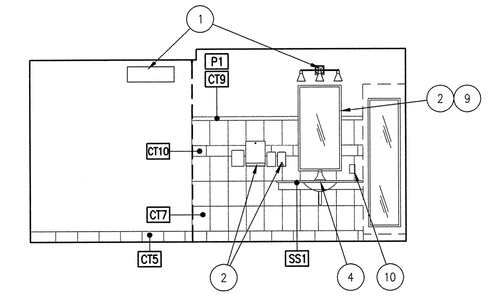

6 SPA – 109,209
SCALE 1/4" = 1'-0"

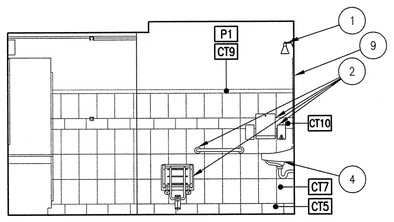

7 SPA – 109,209
SCALE 1/4" = 1'-0"

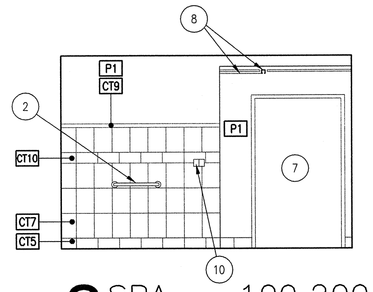

8 SPA – 109,209
SCALE 1/4" = 1'-0"

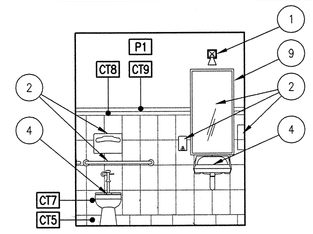

STAFF TOILET – 9 118,218
SCALE 1/4" = 1'-0"

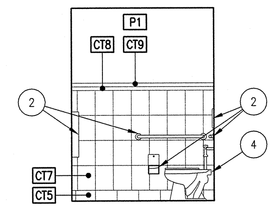

STAFF TOILET – 10 118,218
SCALE 1/4" = 1'-0"

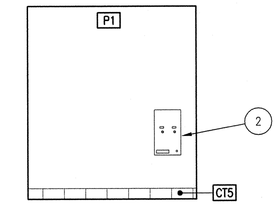

STAFF TOILET – 11 118,218
SCALE 1/4" = 1'-0"

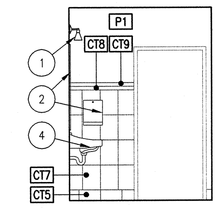

STAFF TOILET – 12 118,218
SCALE 1/4" = 1'-0"

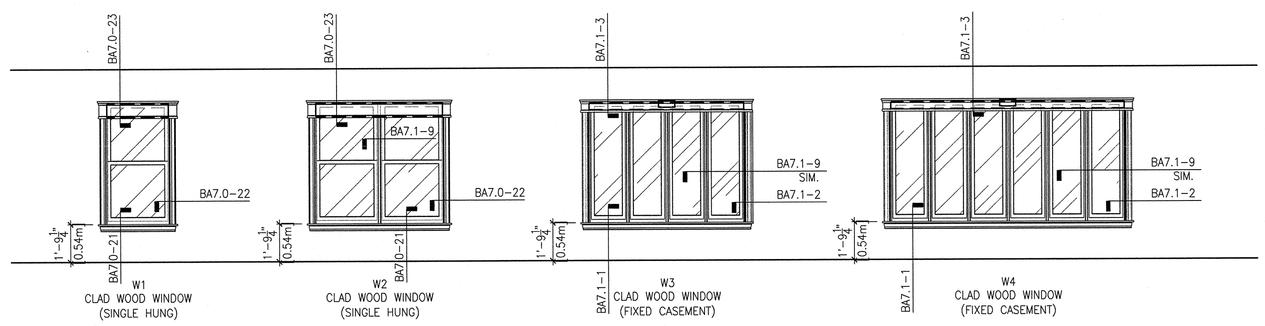

13 INTERIOR ELEVATION OF EXTERIOR WINDOWS
SCALE 1/4" = 1'-0"

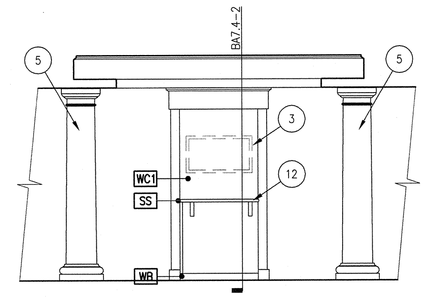

LIVING ROOM – 14 130,230
SCALE 1/4" = 1'-0"

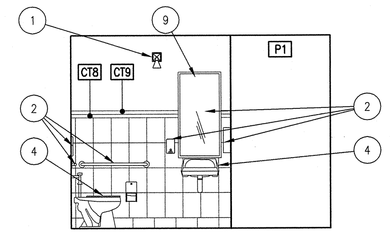

PUBLIC TOILET – 15 222
SCALE 1/4" = 1'-0"

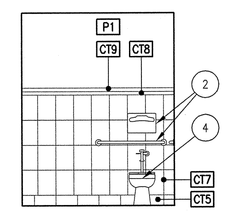

PUBLIC TOILET – 16 222
SCALE 1/4" = 1'-0"

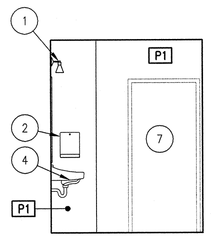

PUBLIC TOILET – 17 222
SCALE 1/4" = 1'-0"

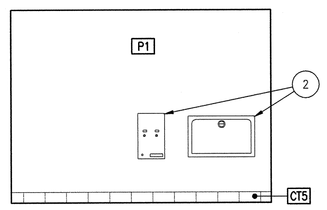

PUBLIC TOILET – 18 222
SCALE 1/4" = 1'-0"

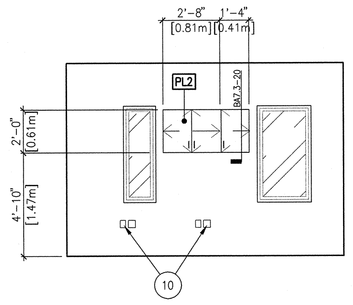

HOME OFFICE – 19 220
SCALE 1/4" = 1'-0"

GENERAL NOTES:

A. RE: BA1.2 AND BA1.3 FOR WALL TYPES DIMENSION PLANS.

B. RE: BA6.2 AND BA6.3 FOR FURNITURE AND EQUIPMENT PLANS.

C. RE: BA6.4 AND BA6.5 FOR DOOR SCHEDULES AND WINDOW TYPES.

D. RE: BA6.0 AND BA6.1 FOR FINISH SCHEDULE.

E. CONTRACTOR SHALL PROVIDE BLOCKING OR BACKING FOR ALL WALL-MOUNTED ACCESSORIES AND EQUIPMENT. ASSURE THAT ALL REQUIRED BACKING IS INSTALLED IN WALLS PRIOR TO INSTALLING DRYWALL. THIS INCLUDES BACKING FOR WALL-MOUNTED DOORSTOPS. WOOD BLOCKING/BACKING TO BE FIRE TREATED.

F. PROVIDE MOISTURE RESISTANT GYPSUM WALLBOARD AT ALL AREAS EXPOSED TO MOISTURE.

G. PROVIDE 'J' TRIM AT ALL GYPSUM BOARD TRANSITIONS TO DISSIMILAR MATERIALS.

H. RE: BA9.0 AND BA9.1 FOR REFLECTED CEILING PLANS.

I. THE HINGE SIDE OF DOOR FRAMES SHALL BE MOUNTED 4" MIN. FROM ADJACENT PERPENDICULAR WALL UNLESS NOTED OTHERWISE.

J. PROVIDE INSULATED COVERS AT ALL EXPOSED PIPING UNDER LAVATORIES.

K. FIELD VERIFY ALL DIMENSIONS PRIOR TO FABRICATION OF CASEWORK.

L. MIRRORS ARE TO BE CENTERED OVER THE SINKS.

M. VERIFY ALL MILLWORK LOCKING REQUIREMENTS PRIOR TO INSTALLATION.

N. EXPOSED SURFACES ARE DEFINED AS ANYTHING THAT CAN BE SEEN WITH THE DOORS AND DRAWERS CLOSED. THIS INCLUDES THE UNDER SIDE AND TOP OF WALL MOUNTED CABINETS (INCLUDING SCRIBES AND FILLER PANELS), ALL SURFACES OF COUNTER SUPPORTS, AND ALL OPEN CABINET SHELVES AND SURFACES.

SHEET NOTES:

1. LIGHT FIXTURE, CW/ ELECTRICAL.
2. ACCESSORY RE: ENLARGED PLANS AND BA8.0-1.
3. FURNITURE, RE: FURNITURE SCHEDULE.
4. PLUMBING FIXTURE, CW/ PLUMBING.
5. PRE MANUFACTURED COLUMN ASSEMBLY.
6. UNDER CABINET LIGHTING, CW/ ELECTRICAL.
7. DOOR/FRAME ASSEMBLY.
8. PATIENT LIFT TRACK ASSEMBLY.
9. PROVIDE SPACER BEHIND MIRROR TO MATCH THICKNESS OF TILES.
10. ELECTRICAL DEVICE, RE: ELECTRICAL.
11. NURSE CALL, RE: ELECTRICAL.
12. WOOD MANTEL W/ BRACKETS.

FIXTURE LEGEND:

A. WATER CLOSET, CW/ PLUMBING
B. 36" STAINLESS STEEL GRAB BAR
C. 42" STAINLESS STEEL GRAB BAR
D. FOLD-UP STAINLESS STEEL GRAB BAR
E. TOILET PAPER DISPENSER (V.C.)
F. SEAT COVER DISPENSER (V.C.)
G. SOAP DISPENSER (V.C.)
H. MIRROR
J. PAPER TOWEL DISPENSER (V.C.)
K. 5'-0" WIDE x 12" DEEP STAINLESS STEEL SHELF
L. SEMI-RECESSED FIRE EXTINGUISHER CABINET
M. SHELF WITH MOP AND BROOM HOLDERS AND HOOKS
N. SURFACE-MOUNTED BABY CHANGING STATION (V.C.)
O. SURFACE-MOUNTED SANITARY NAPKIN DISPENSER (V.C.)
P. ROBE HOOK
Q. 24" STAINLESS STEEL GRAB BAR
R. 48" STAINLESS STEEL GRAB BAR
S. FOLD-UP SHOWER SEAT
T. SEMI-RECESSED SANITARY NAPKIN DISPENSER (V.C.)
U. NAPKIN DISPOSAL (V.C.)

REVISIONS	DATE

CSHQA
C.W. MOORE PLAZA
250 S. 5TH ST. BOISE, ID 83702
(208) 343-4635 FAX (208) 343-1858
http://www.cshqa.com

JOHN D. MAULIN, ARCHITECT
C.W. MOORE PLAZA
250 S. 5TH ST
BOISE, IDAHO
PHONE: 208-343-4635 FAX: 208-343-1858

THESE DRAWINGS AND SPECIFICATIONS, AS INSTRUMENTS OF SERVICE, ARE AND SHALL REMAIN THE PROPERTY OF C.W. MOORE PLAZA AND MAULIN ARCHITECT WHETHER THE PROJECT FOR WHICH THEY ARE MADE IS EXECUTED OR NOT. THESE DRAWINGS AND SPECIFICATIONS SHALL NOT BE USED BY ANY PERSON OR ENTITY ON OTHER PROJECTS, FOR ADDITIONS TO THIS PROJECT, OR COMPLETION OF THIS PROJECT WHEN PHASED WITHOUT THE WRITTEN CONSENT OF CSHQA OR ITS AFFILIATES. Copyright ©2011

STAMP
LICENSED ARCHITECT AR.1706
JOHN D. MAULIN STATE OF IDAHO
DECEMBER 01, 2011

ORIGINAL DOCUMENT SIGNED BY ARCHITECT ON FILE WITH THE OWNER
ORIGINAL SIGNED BY: JOHN D. MAULIN
ORIGINAL DATE SIGNED: DECEMBER 01, 2011

CAD FILE NAME: 531-319_BA8.1.DWG
XREF FILE NAME: 531-319_xB_30X42TLBK.DWG
531-319_xFIXT LGND.DWG

DRAWING TITLE: INTERIOR ELEVATIONS

APPROVED: CHIEF OF FACILITY MANAGEMENT SERVICE

APPROVED: MEDICAL CENTER DIRECTOR

PROJECT TITLE: BOISE VAMC
NEW EXTENDED CARE UNIT
BUILDING 'B' CLC

BUILDING NUMBER	CHECKED	DRAWN
122	JDM	TM

LOCATION: VAMC BOISE, IDAHO

DATE: 12/01/2011
PROJECT NO. 531-319
DRAWING NO. BA8.1
DWG 26 OF 78

DEPARTMENT OF VETERANS AFFAIRS

Username: tmontgomery
Dec 02, 2011 - 12:25pm
Q:\2010\10101.01\Arch\02_Drawings\531-319_BA8.1.dwg

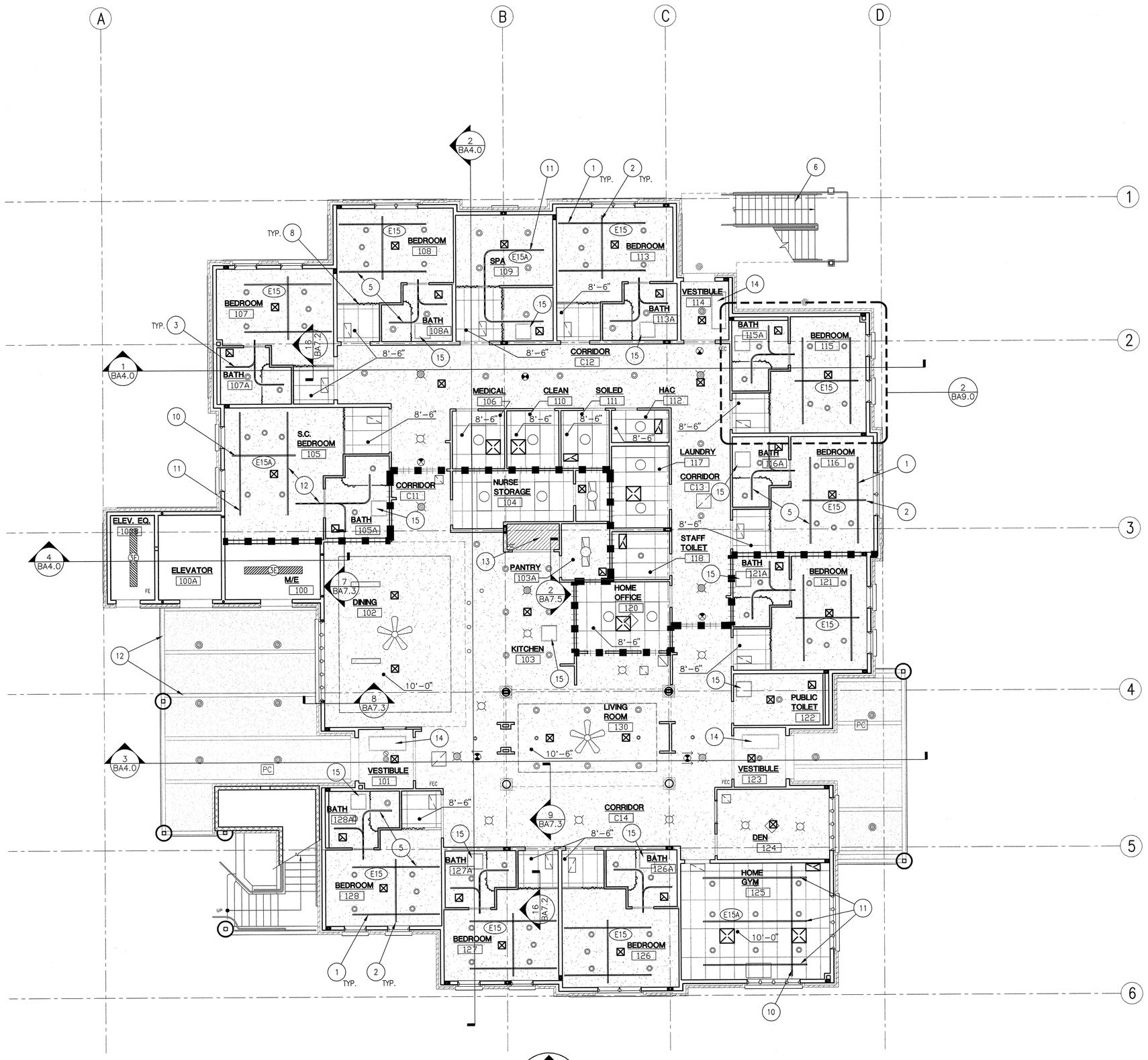

FIRST FLOOR
1 REFLECTED CEILING PLAN

0' 4' 8' 12' 16' 20' 24'

SCALE: 1/8" = 1'-0"

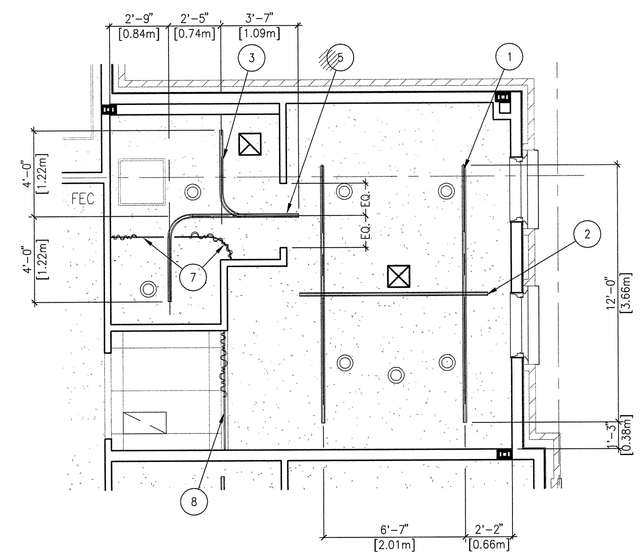

BEDROOM REFLECTED
2 CEILING PLAN, TYP.

0' 2' 4' 6' 8' 10' 12'

SCALE: 1/4" = 1'-0"

GENERAL NOTES:

A. ALL SUSPENDED ACOUSTICAL CEILINGS SHALL BE 9'-0" ABOVE FINISH FLOOR UNLESS NOTED OTHERWISE.

B. LIGHT FIXTURES, GRILLES, DIFFUSERS, ETC. ARE SHOWN FOR GENERAL LOCATIONS ONLY. COORDINATE WITH THE MECHANICAL AND ELECTRICAL DRAWINGS.

C. ALL CEILING MOUNTED EQUIPMENT SHALL BE LOCATED SQUARE AND SYMMETRICAL TO ADJACENT COMPONENTS OR CONSTRUCTION UNLESS NOTED OTHERWISE.

D. REFER TO FINISH SCHEDULE FOR ALL GYPSUM BOARD SURFACES.

E. WHERE ACOUSTICAL CEILINGS OCCUR, ALL FIRE SPRINKLER HEADS SHALL BE CENTERED IN THE TILE UNLESS OTHERWISE INSTRUCTED BY CODE.

F. THE CEILING SPACE FROM THE BOTTOM OF THE CEILING GRID TO A MINIMUM OF 9" ABOVE THE BOTTOM OF THE CEILING GRID IS RESERVED FOR INSTALLATION OF CEILING MOUNTED ITEMS (I.E. LIGHT FIXTURES, SPEAKERS, DIFFUSERS). NO PIPING, DUCTWORK, CONDUIT, ETC., EXCEPT DROPS SERVING THE CEILING MOUNTED ITEMS, IS ALLOWED TO BE INSTALLED IN THE SPACE, UNLESS OTHERWISE APPROVED BY THE COTR.

G. ALL WALL ASSEMBLIES TO EXTEND TO STRUCTURAL DECK ABOVE U.N.O.

SHEET NOTES:

1. PATIENT LIFT TRACK: PRIMARY FIXED RAIL, PENDANT MOUNT TO STRUCTURE ABOVE.
2. PATIENT LIFT TRACK: MOVABLE SECONDARY RAIL.
3. PATIENT LIFT TRACK: FIXED RAIL.
4. LINE INDICATES ROOF EGDE ABOVE. CW/ROOF PLAN BA2.0.
5. PRIMARY AND SECONDARY RAILS TO ALIGN TO ALLOW LIFT TRACK ASSEMBLY TO TRAVERSE BACK AND FORTH FROM BATHROOM TO BEDROOM AREAS.
6. GALVANIZED STEEL STAIR ASSEMBLY, RE: BA1.5.
7. CEILING MOUNTED SHOWER CURTIAN TRACK ON BOTH SIDES OF FIXED PATIENT LIFT TRACK. PROVIDE TWO SHOWERS CURTAINS PER SHOWER, ONE ON EACH SIDE OF FIXED PATIENT LIFT TRACK.
8. CEILING MOUNTED PATIENT PRIVACY CURTAIN. RE: BA7.2-16.
9. CEILING MOUNTED PATIENT PRIVACY CURTAIN, DIVIDED BY FIXED PATIENT LIFT TRACK. PROVIDE CURTAINS FOR EACH SIDE OF PATIENT LIFT TRACK.
10. PATIENT LIFT TRACK- HEAVY DUTY SECONDARY RAIL.
11. PATIENT LIFT TRACK- HEAVY DUTY FIXED RAIL.
12. BEAM WITH INTUMESCENT PAINT.
13. TWO LAYERS OF GYPSUM BOARD AT CEILING ASSEMBLY.
14. 22"X60" [0.56m x 1.52m] ACCESS HATCH.
15. 24"x24" [0.61m x 0.61m] ACCESS PANEL.

LEGEND:

- HATCH INDICATES 2x4 SUSPENDED ACOUSTICAL CEILING
- HATCH INDICATES SUSPENDED GYPSUM BOARD CEILING ASSEMBLY
- HATCH INDICATES SUSPENDED GYPSUM BOARD CEILING ASSEMBLY WITH 2 LAYERS OF GYPSUM BOARD
- LIGHT FIXTURE, CW/ELECTRICAL
- MECHANICAL, CW/ MECHANICAL
- LINE INDICATES SMOKE PARITION, RE: CODE PLAN BG1.1.
- LINE INDICATES WALL TO EXTEND 6" A.F.C.
- (EXX) RE: BA6.2 FOR EQUIPMENT INFORMATION.

REVISIONS	DATE

CSHQA

C.W. MOORE PLAZA
250 S. 5TH ST. BOISE, ID 83702
(208) 343-4635 FAX (208) 343-1858
http://www.cshqa.com

JOHN D. MAULIN, ARCHITECT
C.W. MOORE PLAZA
250 S. 5TH ST
BOISE, IDAHO
PHONE: 208-343-4635 FAX: 208-343-1858

THESE DRAWINGS AND SPECIFICATIONS, AS INSTRUMENTS OF SERVICE, ARE AND SHALL REMAIN THE PROPERTY OF THE ARCHITECT / ENGINEER WHETHER THE PROJECT FOR WHICH THEY ARE MADE IS EXECUTED OR NOT. THESE DRAWINGS AND SPECIFICATIONS SHALL NOT BE USED BY ANY PERSON OR ENTITY ON OTHER PROJECTS, FOR ADDITIONS TO THIS PROJECT, OR COMPLETION OF THIS PROJECT WHEN PHASED WITHOUT THE WRITTEN CONSENT OF CSHQA OR ITS AFFILIATES. Copyright ©2011

STAMP
LICENSED ARCHITECT AR.1706
JOHN D. MAULIN STATE OF IDAHO
DECEMBER 01, 2011
ORIGINAL DOCUMENT SIGNED BY ARCHITECT ON FILE WITH THE OWNER. ORIGINAL SIGNED BY: JOHN D. MAULIN ORIGINAL DATE SIGNED: DECEMBER 01, 2011

CAD FILE NAME: 531-319_BA9.0.DWG
XREF FILE NAME: 531-319_xB_30X42TLBK.DWG, 531-319_xB_BASE1.DWG, 531-319_xB_LIGHTING1.DWG

DRAWING TITLE: FIRST FLOOR REFLECTED CEILING PLAN

APPROVED: CHIEF OF FACILITY MANAGEMENT SERVICE
APPROVED: MEDICAL CENTER DIRECTOR

PROJECT TITLE: BOISE VAMC NEW EXTENDED CARE UNIT BUILDING 'B' CLC

BUILDING NUMBER: 122
CHECKED: DRD/JDM
DRAWN: TM
LOCATION: VAMC BOISE, IDAHO

DATE: 12/01/2011
PROJECT NO.: 531-319
DRAWING NO.: BA9.0
DWG 27 OF 78

DEPARTMENT OF VETERANS AFFAIRS

Username:bsmith
Dec 02, 2011 - 12:37pm
Q:_2010\10101.0\Arch\02_Drawings\531-319_BA9.0.dwg

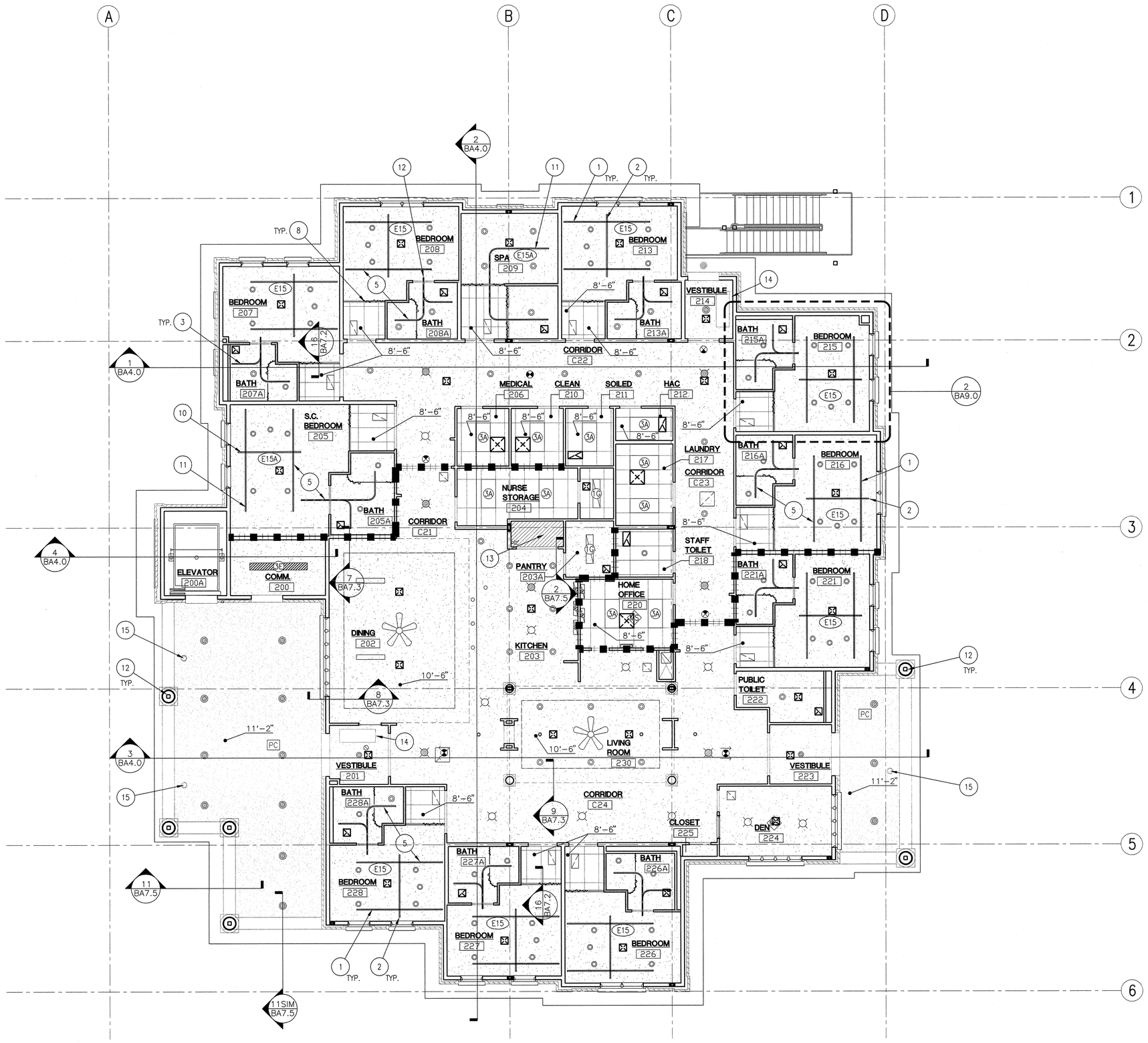

SECOND FLOOR
1 REFLECTED CEILING PLAN

0' 4' 8' 12' 16' 20' 24'

SCALE: 1/8" = 1'-0"

GENERAL NOTES:

A. ALL SUSPENDED ACOUSTICAL CEILINGS SHALL BE 9'-0" ABOVE FINISH FLOOR UNLESS NOTED OTHERWISE.

B. LIGHT FIXTURES, GRILLES, DIFFUSERS, ETC. ARE SHOWN FOR GENERAL LOCATIONS ONLY. COORDINATE WITH THE MECHANICAL AND ELECTRICAL DRAWINGS.

C. ALL CEILING MOUNTED EQUIPMENT SHALL BE LOCATED SQUARE AND SYMMETRICAL TO ADJACENT COMPONENTS OR CONSTRUCTION UNLESS NOTED OTHERWISE.

D. REFER TO FINISH SCHEDULE FOR ALL GYPSUM BOARD SURFACES.

E. WHERE ACOUSTICAL CEILINGS OCCUR, ALL FIRE SPRINKLER HEADS SHALL BE CENTERED IN THE TILE UNLESS OTHERWISE INSTRUCTED BY CODE.

F. THE CEILING SPACE FROM THE BOTTOM OF THE CEILING GRID TO A MINIMUM OF 9" ABOVE THE BOTTOM OF THE CEILING GRID IS RESERVED FOR INSTALLATION OF CEILING MOUNTED ITEMS (I.E. LIGHT FIXTURES, SPEAKERS, DIFFUSERS). NO PIPING, DUCTWORK, CONDUIT, ETC., EXCEPT DROPS SERVING THE CEILING MOUNTED ITEMS, IS ALLOWED TO BE INSTALLED IN THE SPACE, UNLESS OTHERWISE APPROVED BY THE COTR.

G. ALL WALL ASSEMBLIES TO EXTEND TO STRUCTURAL DECK ABOVE, U.N.O.

SHEET NOTES:

1. PATIENT LIFT TRACK: PRIMARY FIXED RAIL, PENDANT MOUNT TO STRUCTURE ABOVE.
2. PATIENT LIFT TRACK: MOVABLE SECONDARY RAIL.
3. PATIENT LIFT TRACK: FIXED RAIL.
4. LINE INDICATES ROOF EDGE ABOVE. CW/ROOF PLAN BA2.0.
5. PRIMARY AND SECONDARY RAILS TO ALIGN TO ALLOW LIFT TRACK ASSEMBLY TO TRAVERSE BACK AND FORTH FROM BATHROOM TO BEDROOM AREAS.
6. GALVANIZED STEEL STAIR ASSEMBLY, RE: BA1.5.
7. CEILING MOUNTED SHOWER CURTAIN TRACK ON BOTH SIDES OF FIXED PATIENT LIFT TRACK. PROVIDE TWO SHOWERS CURTAINS PER SHOWER, ONE ON EACH SIDE OF FIXED PATIENT LIFT TRACK.
8. CEILING MOUNTED PATIENT PRIVACY CURTAIN. RE: BA7.2-16.
9. CEILING MOUNTED PATIENT PRIVACY CURTAIN, DIVIDED BY FIXED PATIENT LIFT TRACK. PROVIDE CURTAINS FOR EACH SIDE OF PATIENT LIFT TRACK,
10. PATIENT LIFT TRACK- HEAVY DUTY SECONDARY RAIL.
11. PATIENT LIFT TRACK- HEAVY DUTY FIXED RAIL.
12. COLUMN WITH INTUMESCENT PAINT.
13. TWO LAYERS OF GYPSUM BOARD AT CEILING ASSEMBLY.
14. 22"X60" [0.56m x 1.52m] ACCESS HATCH.
15. ROOF OVERFLOW PENETRATION, PROVIDE ESCUTCHEON.

LEGEND:

- HATCH INDICATES 2x4 SUSPENDED ACOUSTICAL CEILING
- HATCH INDICATES SUSPENDED GYPSUM BOARD CEILING ASSEMBLY
- HATCH INDICATES SUSPENDED GYPSUM BOARD CEILING ASSEMBLY WITH 2 LAYERS OF GYPSUM BOARD
- LIGHT FIXTURE, CW/ELECTRICAL
- MECHANICAL, CW/ MECHANICAL
- LINE INDICATES SMOKE PARITION, RE: CODE PLAN BG1.1.
- LINE INDICATES WALL TO EXTEND 6" A.F.C.
- (EXX) RE: BA6.3 FOR EQUIPMENT INFORMATION.

REVISIONS	DATE

CSHQA

C.W. MOORE PLAZA
250 S. 5TH ST. BOISE, ID 83702
(208) 343-4635 FAX (208) 343-1858
http://www.cshqa.com

JOHN D. MAULIN, ARCHITECT
C.W. MOORE PLAZA
250 S. 5TH ST
BOISE, IDAHO
PHONE: 208-343-4635 FAX: 208-343-1858

THESE DRAWINGS AND SPECIFICATIONS, AS INSTRUMENTS OF SERVICE, ARE AND SHALL REMAIN THE PROPERTY OF THE ARCHITECT / ENGINEER WHETHER THE PROJECT FOR WHICH THEY ARE MADE IS EXECUTED OR NOT. THESE DRAWINGS AND SPECIFICATIONS SHALL NOT BE USED BY ANY PERSON OR ENTITY ON OTHER PROJECTS, FOR ADDITIONS TO THIS PROJECT, OR COMPLETION OF THIS PROJECT WHEN PHASED WITHOUT THE WRITTEN CONSENT OF CSHQA OR ITS AFFILIATES. Copyright ©2011

STAMP
LICENSED ARCHITECT AR.1706
JOHN D. MAULIN STATE OF IDAHO
DECEMBER 01, 2011

ORIGINAL DOCUMENT SIGNED BY ARCHITECT ON FILE WITH THE OWNER
ORIGINAL SIGNED BY: JOHN D. MAULIN
ORIGINAL DATE SIGNED: DECEMBER 01, 2011

CAD FILE NAME:
531-319_BA9.1.DWG

XREF FILE NAME:
531-319_xB_30X42TLBK.DWG
531-319_xB_BASE2.DWG
531-319_xB_LIGHTING2.DWG
531-319_xB_Roof Plan.DWG

DRAWING TITLE
SECOND FLOOR
REFLECTED CEILING PLAN

APPROVED: CHIEF OF FACILITY MANAGEMENT SERVICE

APPROVED: MEDICAL CENTER DIRECTOR

PROJECT TITLE
BOISE VAMC
NEW EXTENDED CARE UNIT
BUILDING 'B' CLC

BUILDING NUMBER	CHECKED	DRAWN
122	DRD/JDM	TWM

LOCATION
VAMC BOISE, IDAHO

DATE
12/01/2011

PROJECT NO.
531-319

DRAWING NO.
BA9.1

DWG 28 OF 78

DEPARTMENT OF VETERANS AFFAIRS

Username: bsmith
Date: Dec 02, 2011 at 12:57pm
O:\2010\1010\Arch\02_Drawings\531-319_BA9.1.dwg

ARCHITECTURAL
CSHQA, a professional association
C.W. MOORE PLAZA
250 SOUTH 5TH STREET
BOISE, IDAHO 83702
(208) 343-4635 FAX: (208) 343-1858

MECHANICAL
CSHQA, a professional association
C.W. MOORE PLAZA
250 SOUTH 5TH STREET
BOISE, IDAHO 83702
(208) 343-4635 FAX: (208) 343-1858

CIVIL
CSHQA, a professional association
C.W. MOORE PLAZA
250 SOUTH 5TH STREET
BOISE, IDAHO 83702
(208) 343-4635 FAX: (208) 343-1858

ELECTRICAL
CSHQA, a professional association
C.W. MOORE PLAZA
250 SOUTH 5TH STREET
BOISE, IDAHO 83702
(208) 343-4635 FAX: (208) 343-1858

LANDSCAPE
CSHQA, a professional association
C.W. MOORE PLAZA
250 SOUTH 5TH STREET
BOISE, IDAHO 83702
(208) 343-4635 FAX: (208) 343-1858

FIRE PROTECTION
Protection Consultants, Inc.
1199 South Main Street
Suite 101
CENTERVILLE, UT 84014
(801) 295-6070 FAX: (801) 677-0000

STRUCTURAL
AHJ ENGINEERS, PC
STRUCTURAL CONSULTANTS
5418 NORTH EAGLE ROAD #140
BOISE, IDAHO 83713
(208) 323-0199 FAX: (208) 375-5251

TELECOMMUNICATIONS
CSHQA, a professional association
C.W. MOORE PLAZA
250 SOUTH 5TH STREET
BOISE, IDAHO 83702
(208) 343-4635 FAX: (208) 343-1858

OWNER
DEPARTMENT OF VETERANS AFFAIRS
500 WEST FORT STREET
BOISE, IDAHO 83702-4598
(208) 422-1000 EXT. 4405

NEW EXTENDED CARE UNIT BUILDING 'B' CLC

DEPARTMENT OF VETERANS AFFAIRS
500 WEST FORT STREET
BOISE, IDAHO 83702
(208) 422-1000

PROJECT NO. 531-319
CSHQA NO. 10101.000

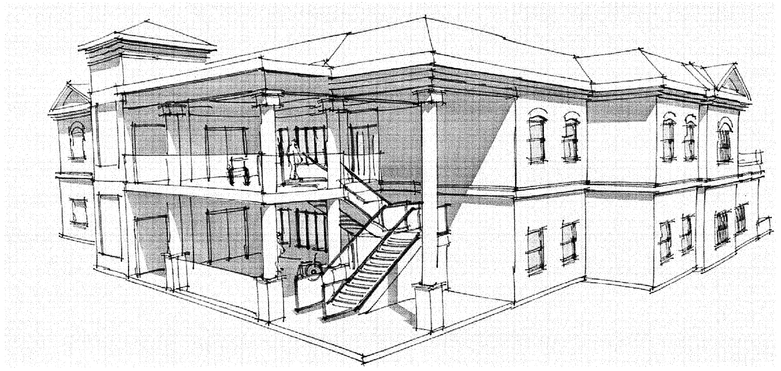

ABBREVIATIONS

(E)	EXISTING
(F)	FUTURE
(N)	NEW
(R)	RENOVATE
℄	CENTERLINE
Φ	DIAMETER OR ROUND
⊥	PERPENDICULAR
□	SQUARE
#	NUMBER
@	AT
A/C	AIR CONDITIONING
A. B.	ANCHOR BOLT
A. F. F.	ABOVE FINISH FLOOR
ABV.	ABOVE
ACOUST.	ACOUSTICAL
A. O. A.	AIRLINES OPERATION AREA
ADJ.	ADJUSTABLE
AGG.	AGGREGATE
ALT.	ALTERNATIVE
ALUM.	ALUMINUM
APPROX.	APPROXIMATE
ARCH.	ARCHITECTURAL
AUTO.	AUTOMATIC
AVE.	AVENUE
B. O.	BOTTOM OF
B. O. C.	BASE OF CURB
B. U.	BUILT-UP
BD.	BOARD
BLDG.	BUILDING
BLK.	BLOCK
BM.	BEAM
BOT.	BOTTOM
C. B.	CATCH BASIN
C. C.	CONTRACTOR FURNISHED-CONTRACTOR INSTALLED
C. I.	CAST IRON
C. I. P.	CAST IN PLACE
C. M. U.	CONCRETE MASONRY UNIT
C. O.	CONCRETE OPENING OR CLEAN-OUT
C. T.	CERAMIC TILE
C. W.	COLD WATER
CAB.	CABINET
CEM.	CEMENT
CFM	CUBIC FEET/MINUTE
CLG.	CEILING
CLR.	CLEAR
CNTRSK.	COUNTERSUNK
COL.	COLUMN
CONC.	CONCRETE
CONT.	CONTINUOUS
CORR.	CORRIDOR
CONTR.	CONTRACTING OFFICER'S TECHNICAL REPRESENTATIVE
CW/	COORDINATE WITH
D.	DEEP
D. F.	DRINKING FOUNTAIN
D. S.	DOWNSPOUT
D. S. P.	DRY STANDPIPE
DET.	DETAIL
DIA.	DIAMETER
DIAG.	DIAGONAL
DIM.	DIMENSION
DN.	DOWN
DWG.	DRAWING
E. B.	EXPANSION BOLT
E. I. F. S.	EXTERIOR INSULATION & FINISHING SYSTEM
E. J.	EXPANSION JOINT
E. P.	ELECTRICAL PANELBOARD
E. W. C.	ELECTRIC WATER COOLER
EA.	EACH
EL.	ELEVATION
ELEC.	ELECTRICAL
ELEV.	ELEVATOR
EQ.	EQUAL
EQUIP.	EQUIPMENT
EXH.	EXHAUST
EXP.	EXPANSION
EXT.	EXTERIOR
F. A.	FIRE ALARM
F. B.	FLAT BAR
F. D.	FLOOR DRAIN
F. E.	FIRE EXTINGUISHER
F. E. C.	FIRE EXTINGUISHER CABINET
F. H. C.	FIRE HOSE CABINET
F. O.	FACE OF
F. O. C.	FACE OF CURB/CONCRETE
F. O. F.	FACE OF FINISH
F. O. M.	FACE OF MASONRY
F. O. S.	FACE OF STUDS
F. O. T.	FACE OF TREAD
FDN.	FOUNDATION
FIN.	FINISH
FL.	FLOOR(ING)
FLASH.	FLASHING
FRP	FIBERGLASS REINFORCED PLASTIC
FT.	FOOT OR FEET
FTG.	FOOTING
FTW.	FIRE TREATED WOOD
FURR.	FURRING
G.	GAS
G. B.	GRAB BAR
GA.	GAUGE OR GAGE
GALV.	GALVANIZED
GYP.	GYPSUM
H.	HIGH
H. A. S.	HEADED ANCHOR STUD
H. B.	HOSE BIBB
H. C.	HANDICAPPED - A. D. A. A. G.
H. M.	HOLLOW METAL
H. P.	HIGH POINT
H. W.	HOT WATER
HORIZ.	HORIZONTAL
HR.	HOUR
HT.	HEIGHT
I. D.	INSIDE DIAMETER
HVAC	HEATING VENTILATING AND AIR CONDITIONING
IN.	INCH
INSUL.	INSULATION
INT.	INTERIOR
JAN.	JANITOR
JT.	JOINT
K. O.	KNOCKOUT
KIT.	KITCHEN
L. F.	LINEAL FEET OR FOOT
L. P.	LOW POINT
LAM.	LAMINATE
LAV.	LAVATORY
LBS.	POUNDS
M. B.	MACHINE BOLT
M. H.	MANHOLE
M. O.	MASONRY OPENING
MAX.	MAXIMUM
MECH.	MECHANICAL
MET.	METAL
MFR.	MANUFACTURER
MIN.	MINIMUM
MISC.	MISCELLANEOUS
MT'D	MOUNTED
N	NORTH
N. I. C.	NOT IN CONTRACT
N. T. S.	NOT TO SCALE
NO.	NUMBER
NOM.	NOMINAL
O/H	OVERHEAD
O/	OVER
O. A.	OVER ALL
O. C.	ON CENTER
O. D.	OUTSIDE DIAMETER
O. H.	OPPOSITE HAND
OFF.	OFFICE
OPNG.	OPENING
OPP.	OPPOSITE
OZ.	OUNCE
PART.	PARTICLE
P/L	PROPERTY LINE
P. LAM.	PLASTIC LAMINATE
P. T. D.	PAPER TOWEL DISPENSER
PL.	PLATE
PLUMB.	PLUMBING
PLYWD.	PLYWOOD
PRE-ENG.	PRE-ENGINEERED METAL BUILDING
PT.	POINT
PVMT.	PAVEMENT
QT.	QUARRY TILE
R.	RADIUS OR RISER
R. D.	ROOF DRAIN
R. O.	ROUGH OPENING
R. W. L.	RAIN WATER LEADER
REF.	REFERENCE (CW/)
REINF.	REINFORCE(D)
REQ'D.	REQUIRED
RM.	ROOM
SAC	SUSPENDED ACOUSTICAL CEILING
S. C.	SPECIAL CARE
S. C. D.	SEAT COVER DISPENSER
S. D.	SOAP DISPENSER
S. F.	SQUARE FEET OR FOOT
S. I. D. A.	SECURITY IDENTIFICATION DISPLAY AREA
S. N. D.	SANITARY NAPKIN DISPENSER
S. N. R.	SANITARY NAPKIN RECEPTACLE
S. S.	STAINLESS STEEL
SCHED.	SCHEDULE
SECT.	SECTION
SHR.	SHOWER
SHT.	SHEET
SIM.	SIMILAR OR SIMILAR TO
SPECS.	SPECIFICATIONS
SQ.	SQUARE
ST.	STREET OR STEEL
STD.	STANDARD
STRUC.	STRUCTURAL
SUSP.	SUSPENDED
SYM.	SYMMETRICAL
T & G	TONGUE & GROOVE
T.	TREAD
T. B.	TOWEL BAR
T. D.	TOP OF DRAIN
T. O.	TOP OF
T. O. C.	TOP OF CURB/CONCRETE
T. O. M.	TOP OF MASONRY
T. O. P.	TOP OF PARAPET
T. O. S.	TOP OF SLAB
T. O. W.	TOP OF WALL
T. P. D.	TOILET PAPER DISPENSER
TEL.	TELEPHONE
THK.	THICKNESS
THRES.	THRESHOLD
TYP.	TYPICAL
U. B. C.	UNIFORM BUILDING CODE
U. F. A. C.	UNIFORM FEDERAL ACCESSIBILITY STANDARDS
U. O. N.	UNLESS OTHERWISE NOTED
V. C. T.	VINYL COMPOSITION TILE
V. C.	VA FURNISHED-CONTRACTOR INSTALLED
V. I. F.	VERIFY IN FIELD
VENT.	VENTILATION
VERT.	VERTICAL
VEST.	VESTIBULE
V. V.	VA FURNISHED-VA INSTALLED
W/	WITH
W/O	WITHOUT
WD.	WOOD
W.	WIDE
W. B.	WALL BEYOND
W. C.	WATER CLOSET OR WALL COVERING
W. G.	WIRE GLASS
W. P.	WORK POINT
W. R.	WASTE RECEPTACLE
W. W. F.	WELDED WIRE FABRIC

GENERAL NOTES

1. ALL CONSTRUCTION TO COMPLY WITH NATIONAL FIRE PROTECTION ASSOCIATION (NFPA) STANDARDS.
2. ALL CONSTRUCTION TO COMPLY WITH THE UNIFORM FEDERAL ACCESSIBILITY STANDARDS (UFAS).
3. THE DRAWINGS INDICATE LOCATION, DIMENSIONS, REFERENCE, AND TYPICAL DETAILS OF CONSTRUCTION. THE DRAWINGS DO NOT INDICATE EVERY CONDITION – WORK NOT PARTICUALRLY DETAILED SHALL BE OF CONSTRUCTION SIMILAR TO PARTS THAT ARE DETAILED.
4. DO NOT SCALE DRAWINGS.
5. FIGURED DIMENSIONS TAKE PRECEDENCE OVER SCALED DRAWINGS. WHERE DISCREPANCIES OCCUR, THEY SHALL BE REPORTED TO VA/ARCHITECT FOR RESOLUTION.
6. DETAILED DRAWINGS AND LARGER SCALE DRAWINGS TAKE PRECEDENCE OVER SMALLER SCALE DRAWINGS.
7. MASONRY DIMENSIONS ARE GIVEN TO FACE OF MASONRY AND TO THE FACE OF ROUGH OPENINGS.
8. PARTITION DIMENSIONS ARE GIVEN TO THE FACE OF STUD UNLESS OTHERWISE NOTED.
9. DOOR OPENING LOCATIONS ARE DIMENSIONED TO ROUGH OPENING OR CENTERLINE OF OPENING.
10. WHERE NO MATERIAL NOTES OCCUR, THE GRAPHIC MATERIAL INDICATION SHALL INDICATE MATERIAL TYPES AND ITEMS. SEE SYMBOL AND MATERIALS LIST ON THIS SHEET.
11. UNLESS OTHERWISE INDICATED, ALL DRAWING NOTES WHICH DO NOT READ "N.I.C.", "EXISTING", OR "EXISTING TO REMAIN", OR "BY OTHERS" SHALL INDICATE NEW WORK WHICH SHALL BE CONTRACTOR FURNISHED AND CONTRACTOR INSTALLED.
12. ALL MATERIALS SHALL BE INSTALLED IN ACCORDANCE WITH THE MANUFACTURER'S RECOMMENDATIONS AND SPECIFICATIONS.
13. THE CONTRACTOR(S) SHALL KEEP ALL AREAS OF CONSTRUCTION CLEAN AND FREE OF DEBRIS. AFTER CONSTRUCTION IS COMPLETE, THE GENERAL CONTRACTOR SHALL PROVIDE FINAL CLEAN UP.
14. THE CONTRACTOR SHALL VERIFY ALL EXISTING CONDITIONS AND DIMENSIONS FOR ACCURACY PRIOR TO BID OPENING. ANY DISCREPANCY SHALL BE BROUGHT TO THE ATTENTION OF THE VA/ARCHITECT.
15. PENETRATIONS THROUGH RATED ASSEMBLIES SHALL BE FIRE STOPPED IN ACCORDANCE WITH NFPA STANDARDS.
16. SUSPENDED CEILING SYSTEMS SHALL BE INSTALLED WITH SEISMIC RESTRAINTS PER NFPA AND INDUSTRY STANDARDS.
17. THE CONTRACTOR IS RESPONSIBLE FOR CONSTRUCTING AND MAINTAINING ALL REQUIRED BARRIERS. TEMPORARY FIRE BARRIERS MUST BE CONSTRUCTED FOR ALL OCCUPANCIES WHEREVER CONSTRUCTION LOWERS THE FIRE SAFETY FEATURES OF THE AREA BEING REMOVED (I.E. FIRE SPRINKLERS OR FIRE ALARM SYSTEMS ARE IMPAIRED OR REMOVED). TEMPORARY RATED PARTITIONS MUST RUN FROM SLAB TO SLAB AND FROM EXTERIOR WALL OR FIRE RATED PARTITION TO EXTERIOR WALL OR FIRE RATED PARTITION.
18. THE VA REQUIRES THAT ALL PENETRATIONS THROUGH FIRE RATED BARRIERS BE ACCOMPLISHED BY A QUALIFIED FIRESTOP CONTRACTOR IN ACCORDANCE WITH SECTION 078400. WHERE IT IS NOT FEASIBLE TO HAVE A QUALIFIED FIRESTOP CONTRACTOR PROVIDING FIRE SEALING ON A DAILY BASIS, IT SHALL BE THE RESPONSIBILITY OF THE TRADE PENETRATING THE FIRE RATED BARRIER TO PROVIDE TEMPORARY FIRE PROTECTION OF ALL PENETRATIONS AT THE END OF EACH WORK DAY. TEMPORARY PROTECTION MUST MEET ALL NFPA CODES RELATED TO FIRE BARRIER PENETRATIONS. THE TEMPORARY PROTECTION MUST BE MAINTAINED IN PROPER ORDER UNTIL THE PERMANENT FIRE STOPPING MATERIAL IS INSTALLED. FIREBRICKS OR FIRE PLUGS MUST BE USED TO SEAL PENETRATIONS IN TEMPORARY OR PERMANENT FIRE SEPARATIONS (FLOORS AND WALLS) UNTIL THEY CAN BE PROPERLY FIRE SEALED (I.E. CORE DRILLS FOR NEW SEWER LINES PRIOR TO INSTALLATION AND FIRE STOPPING OF SEWER LINES).
19. THE CONTRACTOR SHALL SEPARATE ALL CONSTRUCTION AREAS FROM AREAS NOT UNDER CONSTRUCTION. THIS SHALL INCLUDE THE ERECTION OF CLEARLY MARKED BARRICADES TO LIMIT ACCESS BY UNAUTHORIZED PERSONNEL, AND TO PREVENT CONTAMINATION FROM PARTICULATE MATTER. IF A FIRE BARRIER IS NOT REQUIRED, THEN A SOLID BARRIER CONSTRUCTED OF METAL STUDS AND SHEETROCK ON ONE SIDE SHALL BE USED. THE BARRIER MUST PREVENT THE TRANSMISSION OF DUST BY SEALING THE WALL TO THE FLOOR AND CEILING AND SEALING ALL JOINTS OR BY SOME OTHER METHOD. THE EXCEPTION TO A SOLID BARRIER IS IF A FIRE WALL IS NOT REQUIRED AND THE EXPECTED DURATION OF THE TEMPORARY BARRIER WILL NOT EXCEED 7 CALENDAR DAYS. IN THIS SITUATION, A PLASTIC TEMPORARY BARRIER MAY BE USED. IF A PLASTIC BARRIER IS USED, IT MUST BE INSPECTED DAILY TO ASSURE IT INTEGRITY. WHEN PLASTIC SHEETING IS USED, FIRE RESISTANT PLASTIC SHEETING (LIMITED COMBUSTIBILITY) MUST BE USED. ALL NECESSARY CAUTIONARY SIGNAGE WILL BE IN ACCORDANCE WITH FEDERAL REGULATION 29CFR 1926.200.
20. THE CEILING SPACE FROM THE BOTTOM OF THE CEILING GRID TO A MINIMUM OF 9" ABOVE THE BOTTOM OF THE CEILING GRID IS RESERVED FOR INSTALLATION OF CEILING MOUNTED ITEMS (I.E. LIGHT FIXTURES, SPEAKERS, DIFFUSERS). NO PIPING, DUCTWORK, CONDUITS, ETC., EXCEPT DROPS SERVING THE CEILING MOUNTED ITEMS, IS ALLOWED TO BE INSTALLED IN THIS SPACE, UNLESS OTHERWISE APPROVED BY THE CO/TR.
21. CONTRACTOR IS REQUIRED TO FOLLOW ALL OSHA REGULATIONS CONCERNING CONSTRUCTION. THE SUPERINTENDENT IS REQUIRED TO HAVE COMPLETED, AS A MINIMUM, OSHA'S 10-HOUR TRAINING AND BE KNOWLEDGEABLE OF GENERAL SAFETY REQUIREMENTS FOR CONFINED SPACES, FALL PROTECTION, PERSONAL PROTECTIVE EQUIPMENT, TRENCHING, SCAFFOLDING, CRANES, ELECTRICAL, ETC. APPLICABLE SUBCONTRACTORS ARE TO HAVE A COMPETENT PERSON ON SITE WHEN REQUIRED BY OSHA. IF ACCESSING A CONFINED SPACE, THE CONTRACTOR IS REQUIRED HAVE THEIR OWN CONFINED SPACE AIR MONITOR AND TO TEST THE AIR PRIOR TO ENTERING ANY CONFINED SPACE. IF THE CONTRACTOR MUST ENTER A SANITARY SEWER MANHOLE, IN ADDITION TO A CONFINED SPACE AIR MONITOR, THEY MUST HAVE PROPER OSHA RESCUE EQUIPMENT FOR A PERMIT REQUIRED CONFINED SPACE. WHERE IT IS NOT POSSIBLE FOR THE VA TO SHUTDOWN AN ELECTRICAL PANEL OR CIRCUIT, THE CONTRACTOR MUST PROVIDE AND USE THE APPROPRIATE SAFETY CLOTHING AND EQUIPMENT AS REQUIRED BY NFPA 70E. THE VA WILL BE MONITORING THE CONTRACTOR'S COMPLIANCE WITH OSHA REGULATIONS. FAILURE TO COMPLY IS GROUNDS FOR STOPPING WORK.
22. WHEN PLASTIC SHEETING IS USED TO SEPARATE AREAS UNDER CONSTRUCTION FROM THE REMAINDER OF A BUILDING FOR DUST OR ACCESS CONTROL, THE PLASTIC SHEETING MUST BE FIRE RESISTANT (LIMITED COMBUSTIBILITY). THIS DOES NOT CHANGE THE REQUIREMENT TO BUILD TEMPORARY BARRIERS OF METAL STUDS AND GYPSUM BOARD.

MATERIALS & SYMBOL LIST

CONCRETE
BRICK AND CAST STONE MASONRY
SINGLE GLAZING
INSULATED GLAZING
METAL, (LARGE SCALE DRAWING)
METAL, (SMALL SCALE DRAWING)
FRAMING LUMBER
PLYWOOD
PARTICLE BOARD
FINISH LUMBER
GYPSUM BOARD
ACOUSTIC TILE/PANEL
BATT INSULATION
INSULATED PANEL OR DOOR
RIGID INSULATION
MOISTURE BARRIER

3 — ACCESSORY/ EQUIPMENT, RE: BA8.0-1
W1 — WINDOW TYPE RE: BA6.X WINDOW FRAME TYPES
201 — DOOR NUMBER RE: BA6.X DOOR SCHEDULE
1 — SHEET NOTE, RE: SHEET NOTES LIST ON CURRENT PAGE
1 — REVISION KEY RE: REVISED BOX IN TITLE BLOCK OF CURRENT PAGE
201 — ROOM NUMBER
WP — DIMENSION WORK POINT
118'-0" — ELEVATION POINT
WOX — WALL TYPE
1 BA3.0 — EXTERIOR ELEVATIONS (SEE DWG. #1 @ SHT. BA3.0)
3 BA1.2 — DETAIL REFERENCE (SEE DWG. #3 @ SHT. BA1.2)
1 BA4.0 — DETAIL SECTION MARK (SEE DWG. #1 @ SHT. BA4.0)
2 BA8.0 — INTERIOR ELEVATIONS (SEE DWG #2 @ SHT. BA8.0)
NEW CONSTRUCTION (SOLID LINE)
LINE OF SOFFIT/ROOF ABOVE (DASHED LINE)
DRAWING NO. BA1.1 DWG. OF — SHEET NUMBER; DISCIPLINE PREFIX; BUILDING 'B'

DRAWING INDEX

GENERAL
01 BG1.0 TITLE SHEET
02 BG1.1 LIFE SAFETY PLAN

ARCHITECTURAL
03 BA1.0 FIRST FLOOR PLAN
04 BA1.1 SECOND FLOOR PLAN
05 BA1.2 FIRST FLOOR DIMENSION PLAN
06 BA1.3 SECOND FLOOR DIMENSION PLAN
07 BA1.4 ENLARGED FLOOR PLANS
08 BA1.5 ENLARGED FLOOR PLANS
09 BA2.0 ROOF PLAN
10 BA3.0 EXTERIOR ELEVATIONS
11 BA4.0 BUILDING SECTIONS
12 BA4.1 STAIR SECTIONS
13 BA6.0 FIRST FLOOR ROOM FINISH SCHEDULE
14 BA6.1 SECOND FLOOR ROOM FINISH SCHEDULE
15 BA6.2 FIRST FLOOR FURNITURE AND EQUIPMENT PLAN/SCHEDULES
16 BA6.3 SECOND FLOOR FURNITURE AND EQUIPMENT PLAN/SCHEDULES
17 BA6.4 DOOR SCHEDULE AND WINDOW TYPES
18 BA6.5 DOOR SCHEDULE
19 BA7.0 BUILDING DETAILS
20 BA7.1 BUILDING DETAILS
21 BA7.2 BUILDING DETAILS
22 BA7.3 BUILDING DETAILS
23 BA7.4 BUILDING DETAILS
24 BA7.5 BUILDING DETAILS
25 BA8.0 INTERIOR ELEVATIONS
26 BA8.1 INTERIOR ELEVATIONS
27 BA9.0 FIRST FLOOR REFLECTED CEILING PLAN
28 BA9.1 SECOND FLOOR REFLECTED CEILING PLAN

STRUCTURAL
29 BS0.1 GENERAL STRUCTURAL NOTES
30 BS2.0 FOUNDATION PLAN
31 BS2.1 SECOND FLOOR FRAMING PLAN
32 BS2.2 ROOF FRAMING PLAN
33 BS3.0 STRUCTURAL DETAILS
34 BS3.1 STRUCTURAL DETAILS
35 BS3.2 STRUCTURAL DETAILS
36 BS3.3 STRUCTURAL DETAILS
37 BS3.4 STRUCTURAL DETAILS

MECHANICAL
38 BM0.1 MECHANICAL COVER SHEET
39 BM0.2 MECHANICAL SCHEDULES
40 BM2.1 FIRST FLOOR HVAC PLAN
41 BM2.2 SECOND FLOOR HVAC PLAN
42 BM2.3 HVAC ROOF PLAN
43 BM2.4 FIRST FLOOR HYDRONIC PLAN
44 BM2.5 SECOND FLOOR HYDRONIC PLAN
45 BM3.1 HVAC DEATILS
46 BM3.2 HVAC DEATILS
47 BM3.3 HEATING WATER HYDRONIC SCHEMATIC
48 BM3.4 CHILLED WATER HYDRONIC SCHEMATIC
49 BM3.5 CONTROLS SCHEMATIC
50 BM3.6 CONTROLS SCHEMATIC

PLUMBING
51 BP0.1 PLUMBING COVER SHEET
52 BP0.2 PLUMBING SCHEDULES
53 BP2.0 FIRST FLOOR SEWER AND VENT PLAN
54 BP2.1 SECOND FLOOR SEWER AND VENT PLAN
55 BP2.2 FIRST FLOOR WATER AND OXYGEN PLAN
56 BP2.3 SECOND FLOOR WATER AND OXYGEN PLAN
57 BP2.4 ROOF PLUMBING PLAN
58 BP3.0 PLUMBING DETAILS
59 BP3.1 PLUMBING DETAILS

ELECTRICAL
60 BE0.1 ELECTRICAL LEGEND AND SYMBOLS
61 BE0.2 LIGHTING SCHEDULE AND WIRING DIAGRAMS
62 BE2.1 FIRST FLOOR POWER PLAN
63 BE2.2 SECOND FLOOR POWER PLAN
64 BE2.3 FIRST FLOOR LIGHTING PLAN
65 BE2.4 SECOND FLOOR LIGHTING PLAN
66 BE2.5 FIRST FLOOR MECHANICAL POWER PLAN
67 BE2.6 SECOND FLOOR MECHANICAL POWER PLAN
68 BE2.7 ROOF POWER PLAN
69 BE2.8 FIRST FLOOR TELECOMMUNICATION PLAN
70 BE2.9 SECOND FLOOR TELECOMMUNICATION PLAN
71 BE3.1 SINGLE LINE DIAGRAM AND SCHEDULES
72 BE3.2 TELECOMMUNICATION SCHEMATICS
73 BE4.1 ELECTRICAL DETAILS
74 BE4.2 TELECOMMUNICATION ROOM DETAILS

FIRE PROTECTION
75 BFP0.1 FIRE PROTECTION LEGEND AND SYMBOLS
76 BFP2.1 FIRST FLOOR FIRE ALARM PLAN
77 BFP2.2 SECOND FLOOR FIRE ALARM PLAN
78 BFP3.1 FIRE ALARM RISER DIAGRAM AND DETAILS

BID OPTIONS

GENERAL CONSTRUCTION: THE WORK INCLUDES GENERAL CONSTRUCTION, WALKS, GRADING, DRAINAGE, MECHANICAL AND ELECTRICAL WORK, UTILITY SYSTEMS, ELEVATOR AND CERTAIN OTHER ITEMS PER THE CONTRACT DOCUMENTS FOR THIS PROJECT.

BID OPTION NO. 1: BASE BID DOES NOT INCLUDE THE COST TO CONSTRUCT BUILDING 'A'. ADD TO THE SCOPE OF THE WORK THE COST TO FURNISH AND INSTALL BUILDING 'A' AS NOTED WITHIN THE CONSTRUCTION DOCUMENTS.
BID OPTION NO. 2: BASE BID DOES NOT INCLUDE THE COST TO CONSTRUCT THE REAR PORCH STRUCTURE AND EXTERIOR COLUMNS AND ASSOCIATED ELEMENTS FOR BUILDING 'A'. BASE BID DOES INCLUDE THE CONCRETE FLATWORK AT GRADE FOR THE EXTERIOR PATIO. ADD TO THE SCOPE OF THE WORK THE COST TO FURNISH AND INSTALL THE REAR PORCH ROOF STRUCTURE AND EXTERIOR COLUMNS AND ASSOCIATED ELEMENTS AS SHOWN FOR BUILDING 'A'.
BID OPTION NO. 3: BASE BID DOES NOT INCLUDE THE COST TO CONSTRUCT THE REAR PORCH STRUCTURE AND EXTERIOR COLUMNS AND ASSOCIATED ELEMENTS FOR BUILDING 'B'. BASE BID DOES INCLUDE THE CONCRETE FLATWORK AT GRADE FOR THE EXTERIOR PATIO. ADD TO THE SCOPE OF THE WORK THE COST TO FURNISH AND INSTALL THE REAR PORCH ROOF STRUCTURE AND SECOND FLOOR EXTERIOR PATIO FLOOR-CEILING STRUCTURE AND EXTERIOR COLUMNS AND ASSOCIATED ELEMENTS AS SHOWN FOR BUILDING 'B'.
BID OPTION NO. 4: BASE BID DOES NOT INCLUDE THE COST TO FURNISH AND INSTALL THE PREFINISHED PANEL SYSTEM IN BUILDING 'A'. REFERENCE THE CONTRACT DOCUMENTS FOR BASE BID SCOPE OF WORK. BID OPTION: FURNISH AND INSTALL THE INTERIOR WAINSCOT ASSEMBLY IN BUILDING 'A' AS SHOWN WITHIN THE CONSTRUCTION DOCUMENTS.
BID OPTION NO. 5: BASE BID DOES NOT INCLUDE THE COST TO FURNISH AND INSTALL THE PREFINISHED PANEL SYSTEM IN BUILDING 'B'. REFERENCE THE CONTRACT DOCUMENTS FOR BASE BID SCOPE OF WORK. BID OPTION: FURNISH AND INSTALL THE INTERIOR WAINSCOT ASSEMBLY IN BUILDING 'B' AS SHOWN WITHIN THE CONSTRUCTION DOCUMENTS.
BID OPTION NO. 6A SITE STORM SEWER SYSTEM: BASE BID DOES NOT INCLUDE THE COST TO CONSTRUCT A PORTION OF THE SITE STORM SEWER SYSTEM AS NOTED WITHIN THE CONSTRUCTION DOCUMENTS. ADD TO THE SCOPE OF THE WORK THE COST TO FURNISH AND INSTALL A PORTION OF THE SITE STORM DRAINAGE SYSTEM AS NOTED WITHIN THE CONTRACT DOCUMENTS.
BID OPTION NO. 6B SITE SANITARY SEWER MANHOLE ASSEMBLY: BASE BID DOES NOT INCLUDE THE COST TO CONSTRUCT A SITE SANITARY SEWER MANHOLE ASSEMBLY AS SHOWN WITHIN THE CONSTRUCTION DOCUMENTS. ADD TO THE SCOPE OF THE WORK THE COST TO FURNISH AND INSTALL A SITE SANITARY SEWER MANHOLE ASSEMBLY AS SHOWN WITHIN THE CONTRACT DOCUMENTS.
BID OPTION NO. 6C SITE POTABLE WATER LINE: BASE BID DOES NOT INCLUDE THE COST TO CONSTRUCT A PORTION OF THE SITE POTABLE WATER LINE AS SHOWN WITHIN THE CONSTRUCTION DOCUMENTS. ADD TO THE SCOPE OF THE WORK THE COST TO FURNISH AND INSTALL A PORTION OF THE SITE POTABLE WATER LINE AS SHOWN WITHIN THE CONTRACT DOCUMENTS.
BID OPTION TO. 6D: BASE BID DOES NOT INCLUDE THE COST TO REMOVE THE APPROXIMATELY 55 LF PORTION OF THE POTABLE WATER LINE INDICATED IN THE CONSTRUCTION DOCUMENTS. ADD TO THE SCOPE OF WORK THE COST OF REMOVE THE PORTION OF POTABLE WATER LINE AS SHOWN WITHIN THE CONTRACT DOCUMENTS.
BID OPTION NO. 6E: BASE BID DOES NOT INCLUDE THE COST TO REMOVE THE TREES/BUSHES INDICATED AS "BID OPTION 6E" IN THE CONSTRUCTION DOCUMENTS. ADD TO THE SCOPE OF WORK THE COST OF REMOVE THE TREES/BUSHES AS SHOWN WITHIN THE CONTRACT DOCUMENTS.
BID OPTION NO. 7: NOT USED
BID OPTION NO. 8: BASE BID: FURNISH, INSTALL AND TERMINATE 72 STRANDS OF OPTICAL FIBER CABLES FROM BUILDING 67 TO BUILDING 'B' AS SHOWN AND NOTED IN THE CONTRACT DOCUMENTS. BID OPTION: FURNISH, INSTALL AND TERMINATE 24 STRANDS OF OPTICAL FIBER CABLES FROM THE MEDICAL IMAGING BUILDING TO BUILDING 'B' AS SHOWN AND NOTED IN THE CONTRACT DOCUMENTS.
BID OPTION NO. 9: BASE BID DOES NOT INCLUDE INTERIOR WINDOW COVERINGS. ADD TO THE SCOPE OF THE WORK THE COST TO FURNISH AND INSTALL THE INTERIOR WINDOW COVERINGS AS SHOWN IN THE CONTRACT DOCUMENTS.

SITE KEY PLAN
(NOT TO SCALE)

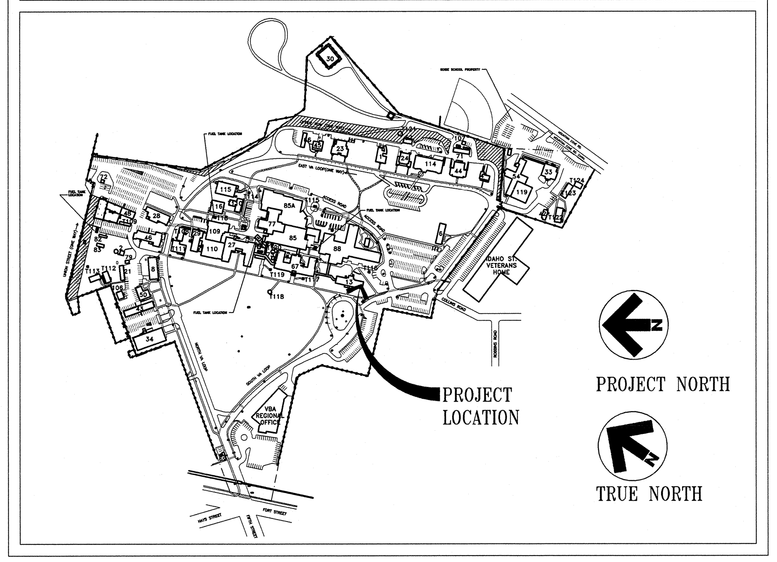

VICINITY MAP
(NOT TO SCALE)

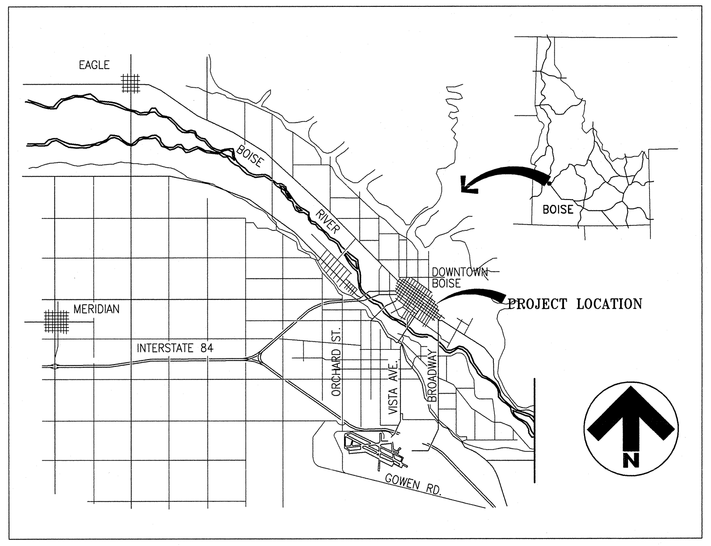

REVISIONS | DATE

CSHQA
C.W. MOORE PLAZA
250 S. 5TH ST. BOISE, ID 83702
(208) 343-4635 FAX (208) 343-1858
http://www.cshqa.com

JOHN D. MAULIN, ARCHITECT
C.W. MOORE PLAZA
250 S. 5TH ST
BOISE, IDAHO
PHONE: 208-343-4635 FAX: 208-343-1858

THESE DRAWINGS AND SPECIFICATIONS, AS INSTRUMENTS OF SERVICE, ARE AND SHALL REMAIN THE PROPERTY OF THE ARCHITECT / ENGINEER WHETHER THE PROJECT FOR WHICH THEY ARE MADE IS EXECUTED OR NOT. THESE DRAWINGS AND SPECIFICATIONS SHALL NOT BE USED BY ANY PERSON OR ENTITY ON OTHER PROJECTS, FOR ADDITIONS TO THIS PROJECT, OR COMPLETION OF THIS PROJECT WHEN PHASED WITHOUT THE WRITTEN CONSENT OF CSHQA OR ITS AFFILIATES. Copyright ©2011

STAMP
LICENSED ARCHITECT AR 1706
JOHN D. MAULIN STATE OF IDAHO
DECEMBER 01, 2011
ORIGINAL DOCUMENT SIGNED BY ARCHITECT ON FILE WITH THE OWNER
ORIGINAL SIGNED BY: JOHN D. MAULIN
ORIGINAL DATE SIGNED: DECEMBER 01, 2011

CAD FILE NAME: 531-319_BG1.0.DWG
XREF FILE NAME: 531-319_xB_3OX42TLBK.DWG; 10 RENDER.JPG; x_SITE.DWG

DRAWING TITLE: TITLE SHEET	PROJECT TITLE: BOISE VAMC NEW EXTENDED CARE UNIT BUILDING 'B' CLC		DATE: 12/01/2011
			PROJECT NO.: 531-319
APPROVED: CHIEF OF FACILITY MANAGEMENT SERVICE	BUILDING NUMBER: 122	CHECKED: DRD/JDM	DRAWN: TWM
APPROVED: MEDICAL CENTER DIRECTOR	LOCATION: VAMC BOISE, IDAHO		DRAWING NO.: BG1.0
			DWG 01 OF 78

DEPARTMENT OF VETERANS AFFAIRS

Username: tmontgomery
Dec 05, 2011 – 9:35am
Q:\2010\10101.0\arch\02_Drawings\531-319_BG1.0.dwg

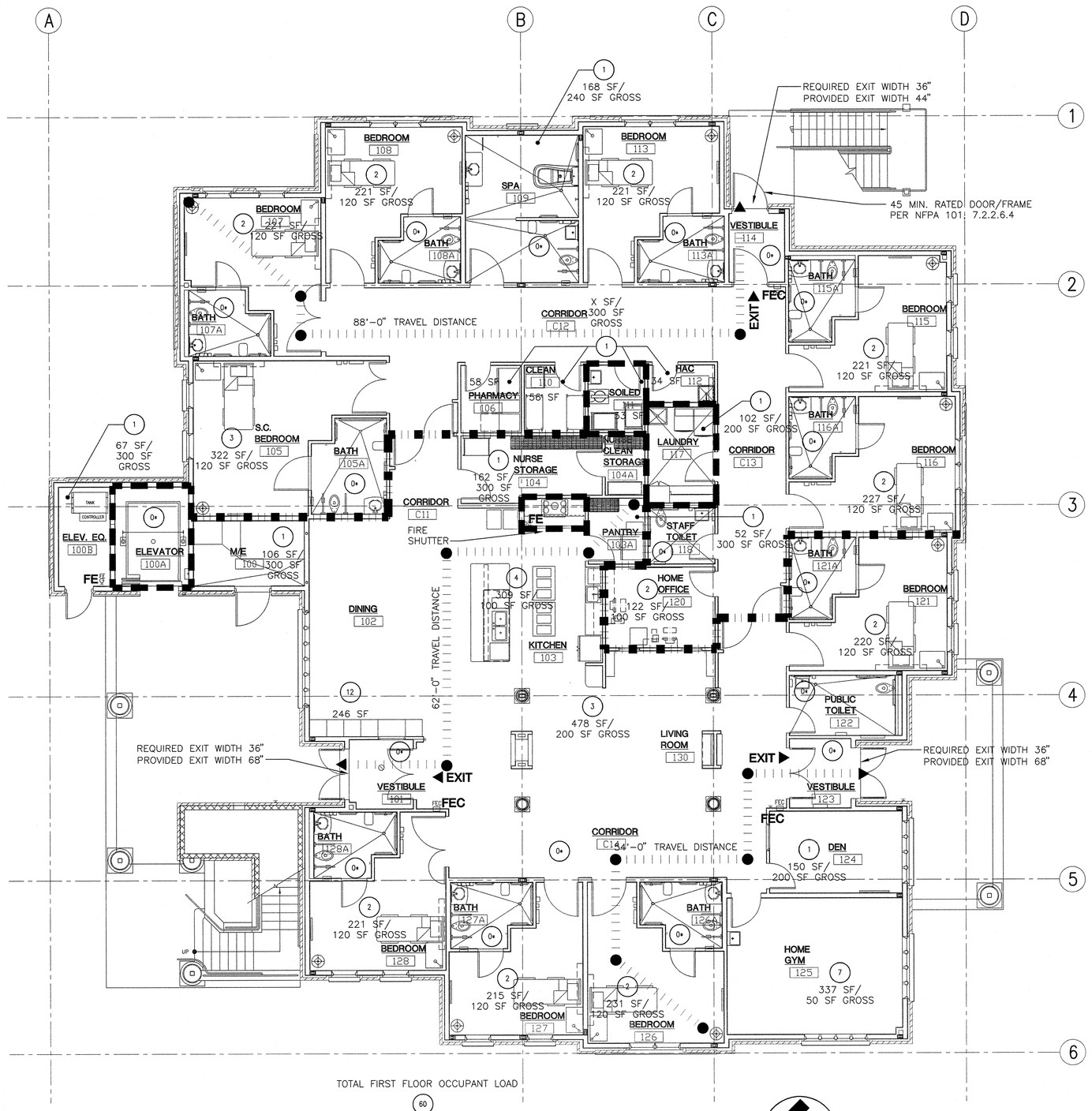

1 FIRST FLOOR LIFE SAFETY PLAN

0' 4' 8' 12' 16' 20' 24'

SCALE: 1/8 "=1'-0"

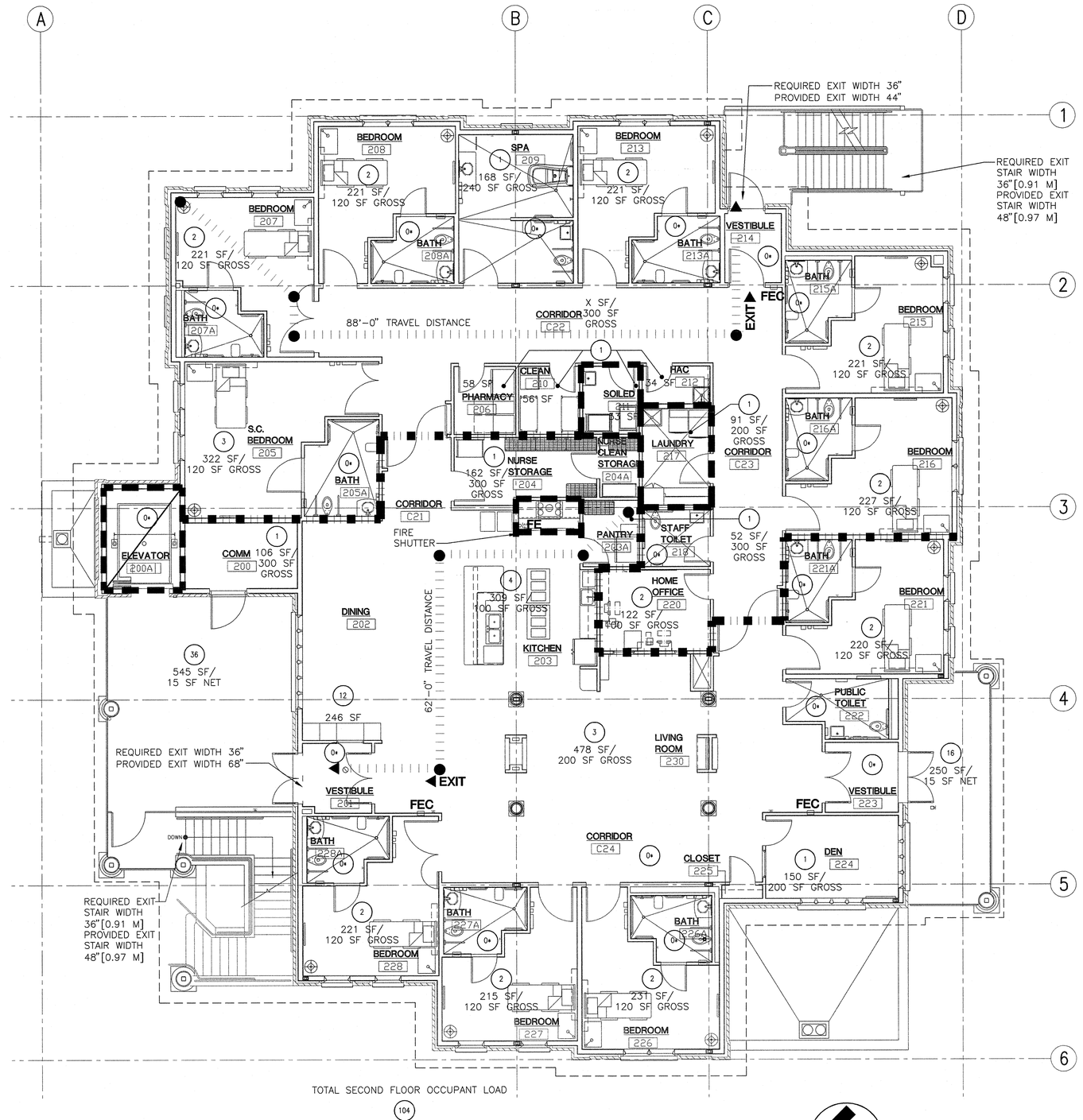

2 SECOND FLOOR LIFE SAFETY PLAN

0' 4' 8' 12' 16' 20' 24'

SCALE: 1/8 "=1'-0"

THE PROVIDED INFORMATION RELATES TO BOTH THE 10 BEDROOM AND 12 BEDROOM HOUSE DESIGNS.				
CODE ANALYSIS	NFPA 101 LSC 2009	SECTION REF.	IBC 2009	SECTION REF.
OCCUPANCY CLASSIFICATION (NURSING HOME)	HEALTH CARE	6.1.5, 6.1.5.1		308.3, 308.3.1
BUILDING HEIGHT &AREA (MAX FOR CONSTRUCTION TYPE)	1 OR 2 STORY	TABLE 18.1.6.1	1 OR 2 STORY	TABLE 503
CONSTRUCTION TYPE & FIRE RESISTANCE RATINGS	Type II (111)	Table A.8.2.1.2	2A	602.1, 602.5
STRUCTURAL FRAME	1 HOUR	Table A.8.2.1.2	1 HOUR	TABLE 601
EXTERIOR BEARING WALLS	1 HOUR	Table A.8.2.1.2	1 HOUR	TABLE 601
INTERIOR BEARING WALLS	1 HOUR	Table A.8.2.1.2	1 HOUR	TABLE 601
EXTERIOR NON BEARING WALLS &PARTITIONS	0 HOUR NC	Table A.8.2.1.2	1hr table 602	TABLE 602
FIRE SEPARATION DISTANCE			1 HOUR	TABLE 602
INTERIOR NON BEARING WALLS &PARTITIONS	0 HOUR NC	Table A.8.2.1.2	0 HOUR NC	TABLE 601
FLOOR CONSTRUCTION & SECONDARY MEMBERS	1 HOUR	Table A.8.2.1.2	1 HOUR	TABLE 601
ROOF CONSTRUCTION & SECONDARY MEMBERS	1 HOUR	Table A.8.2.1.2	1 HOUR	TABLE 601
ELEVATOR HOISTWAY SEPERATION	2 HOUR	Table A.8.2.1.2	1 HOUR	TABLE 601
FOR IBC 2009, AN APPROVED AUTOMATIC SPRINKLER SYSTEM IS ALLOWED TO BE SUBSTITUTED FOR 1-HOUR FIRE RESISTANCE-RATED CONSTRUCTION, PROVIDED SUCH SYSTEM IS NOT OTHERWISE REQUIRED BY OTHER PROVISIONS OF THE CODE OR USED FOR AN ALLOWABLE AREA INCREASE OR AN ALLOWABLE HEIGHT INCREASE. THE 1-HOUR SUBSTITUTION FOR THE FIRE RESISTANCE OF EXTERIOR WALLS SHALL NOT BE PERMITTED.				

SPECIAL DETAILED REQUIREMENTS BASED ON USE &OCCUPANCY	CHAPTER 18	6.1.5	CHAPTER 4 (FOR GROUP 1-2)	407
SUBDIVISION OF BUILDING SPACES (SMOKE COMPARTMENTS - SMOKE BARRIER SEPARATION)	2 PER STORY	18.3.7.1	2 PER STORY	407.4
REFUGE AREA (PER PATIENT)	30 SF NET	18.2.2.5.1.1	30 SF NET	407.4.1
(PER OCCUPANT)	6 SF NET	18.2.2.5.12	6 SF NET	407.4.1
RESIDNETAL COOKING APPLIANCES	FIRE SHUTTER	18.3.2.5.2/NFPA96	CORRIDOR PROTECTION	
FIRE &SMOKE PROTECTION FEATURES (FIRE-RESISTANCE-RATINGS)				
FIRE BARRIERS	1/2 TO 3 HOURS	8.3.1	2 HOURS	707.3.9/table 707.3.9
SHAFT ENCLOSURES	1/2 TO 2 HOURS	8.3.4.2	1 HOUR	708.4
FIRE PARTITIONS	1/2 TO ' HOURS	8.3.4.2	1 HOUR	709.1
SMOKE BARRIERS	1 HOUR	8.5, 18.3.7.3	1 HOUR	710.3,710.4
SMOKE PARTITIONS	0 HOUR	3.3.238, A3.3.238	0 HOUR	711 .3
FLOOR/ROOF-CEILING (HORIZONTAL) ASSEMBLIES	1 HOUR	TABLEA8.2.1.2	1 HOUR	712.3
INTERIOR FINISHES (FLAME SPREAD & SMOKE DEVELOPMENT)	ASTM E84/UL723	10.2.3,10.2.7	ASTM E84/UL723	803.1.1, 804.2
WALL/CEILING: EXTEND CLOSURES & EXIT PASSAGEWAYS	A, B	18.3.3.2	B	TABLE 803.9
WALL/CEILING: CORRIDORS	A, B	18.3.3.2	B	TABLE 803.9
WALL/CEILING: ROOMS &ENCLOSED SPACES	A, B	18.3.3.2	B,C	TABLE 803.9
FLOOR (NFPA 253, MIN CRITICAL RADIANT FLUX)	CLASS I OR II	18.3.3.3.	CLASS I OR II	804.4.1
FIRE PROTECTION SYSTEMS FOR HEALTH CARE/12				
FIRE ALARM &DETECTION SYSTEMS	REQUIRED	18.3.4.1,9.6	REQUIRED	407.6,407.7,907.2.6
AUTOMATIC SPRINKLER SYSTEM	REQUIRED	18.3.5.1,9.7	REQUIRED	407.5, 903.3.1.1
FIRE EXTINGUISHERS	REQUIRED	18.3.5.11, 9.7.4.1	REQUIRED	906.1
FIRE DEPARTMENT CONNECTIONS (WHERE PROVIDED)	NFPA 14	9.7.4.2	PER NFPA	912
1. FIRE PUMPS (WHERE PROVIDED)	NFPA 14	9.7.4.2	PER NFPA	913
MEANS OF EGRESS	CHAPTER 7	18.2	CHAPTER 10	
HEALTHCARE/12 EGRESS REQUIREMENTS		18.2.2 THRU 18.2.11		1014.2.2THRU 1014.2.7
TRAVEL DISTANCE (MAX, "WITH SPRINKLER SYSTEM ONLY)	200 FEET	18.2.6.2.1	200 FEET *	TABLE1016.1
CORRIDOR FIRE-RESISTANCE RATING (SMOKE PARTITION)	0 HOUR	18.3.6.2.2, 18.3.6.2.3	0 HOUR	407.3, 711 .3
CORRIDOR WIDTH	8 FEET, 44"	18.2.3.4	8 FEET', 44"	1018.2
NUMBER OF EXITS (PER STORY)	2	18.2.4.1,18.2.4.2	2	TABLE 1021 .1
* IN GROUP I2 IN AREAS WHERE REQUIRED FOR BED MOVEMENT				

CODE DATA:

CODES UTILIZED:	NFPA 101 LIFE SAFETY CODE, 2009 EDITION
OCCUPANCIES:	NFPA 101 2009 EDITION, CHAPTER 18 NEW HEALTH CARE OCCUPANCIES
FIRST FLOOR AREA:	8,036 S.F.
SECOND FLOOR AREA:	7,618 S.F.
TOTAL FLOOR AREA:	15,654 S.F. (TOTAL INTERIOR AREA, NOT INCLUDING PORCH OR PATIOS)
FIRE WALLS:	FIRE RATED SHUTTER AT KITCHEN STOVE
FIRE SUPPRESSION SYSTEM:	YES
EMERGENCY EXIT LIGHTING:	YES
FIRE ALARM SYSTEM:	YES
MINIMUM ROOF CLASS:	CLASS C

LEGEND:

- INDICATES PATH OF TRAVEL
- EXIT — INDICATES REQUIRED EXIT
- 418 SF/ 50 SF [38.8 SM/ 4.7 SM] — OCCUPANT LOAD, ACTUAL AREA, LOAD FACTOR — INDICATES ROOM OCCUPANCY INFO.
- LINE INDICATES SMOKE BARRIER
- LINE INDICATES 1-HR FIRE RATED SMOKE PARTITION
- FEC — FIRE EXTINGUISHER CABINET
- FE — SURFACE MOUNTED FIRE EXTINGUISHER

GENERAL NOTES

A. NFPA 101 PRIMARILY ADDRESSES LIFE SAFETY AND FIRE PROTECTION FEATURES WHILE THE IBC ADDRESSES A WIDE RANGE OF CONSIDERATIONS, INCLUDING, BUT NOT LIMITED TO, STRUCTURAL STRENGTH, SEISMIC STABILITY, SANITATION, ADEQUATE LIGHT AND VENTILATION, AND ENERGY CONSERVATION. VA BUILDINGS MUST MEET THE REQUIREMENTS OF NFPA 101 AND DOCUMENTS REFERENCED BY NFPA 101 IN ORDER TO COMPLY WITH THE ACCREDITATION REQUIREMENTS OF THE JOINT COMMISSION. THEREFORE, DESIGNS SHALL COMPLY WITH THE REQUIREMENTS OF THE LATEST EDITION OF NFPA 101 AND DOCUMENTS REFERENCED THEREIN. DESIGN FEATURES NOT ADDRESSED BY NFPA 101 OR DOCUMENTS REFERENCED THERE IN SHALL COMPLY WITH THE REQUIREMENTS OF THE LATEST EDITION OF THE IBC OR AS OTHERWISE ADDRESSED ABOVE IN THIS PROGRAM GUIDE. FOR DESIGN FEATURES THAT ARE ADDRESSED BY BOTH THE IBC AS WELL AS NFPA 101 OR A DOCUMENT REFERENCED BY NFPA 101, THE REQUIREMENTS OF NFPA 101 OR THE DOCUMENT REFERENCED BY NFPA 101 SHALL BE USED EXCLUSIVELY (THIS APPLIES EVEN IF THE IBC REQUIREMENTS ARE DIFFERENT).

B. CONFLICTS BETWEEN NATIONALLY RECOGNIZED CODES AND STANDARDS AND VA REQUIREMENTS - SHOULD A CONFLICT EXIST BETWEEN VA REQUIREMENTS AND VA ADOPTED NATIONALLY RECOGNIZED CODES AND STANDARDS, THE CONFLICT SHALL BE BROUGHT TO THE ATTENTION OF VA. THE RESOLUTION OF THE CONFLICT SHALL BE MADE BY THE AUTHORITY HAVING JURISDICTION FOR VA TO ENSURE A CONSISTENCY SYSTEM WIDE.

C. NOTE IN CALCULATING THE OCCUPANCY LOADS OF EACH SPACE, THE FOLLOWING OCCUPANCIES WERE USED (X= ROOM AREA, SEE PLAN):

a. INSTITUTIONAL AREAS - INPATIENT TREATMENT AREAS X/240: SPA
b. INSTITUTIONAL AREAS - SLEEPING AREAS X/120 : BEDROOMS
c. KITCHEN X/100: KITCHEN
d. BUSINESS AREAS X/100: HOME OFFICE
e. RESIDENTIAL X/200: DEN, LIVING ROOM, LAUNDRY, AND DINING ROOM
f. EXERCISE ROOMS 1/50: HOME GYM
g. ALL OTHER SPACES WERE CONSIDERED EITHER STORAGE OR ACCESSORY SPACES

D. PENETRATIONS THROUGH RATED ASSEMBLIES SHALL BE FIRE STOPPED IN ACCORDANCE WITH NFPA STANDARDS.

APPLICABLE STANDARDS AND CODES

VA DIRECTIVES, DESIGN MANUALS, MASTER SPECIFICATIONS, VA BOISE MEDICAL CAD STANDARD APPLICATION GUIDE, AND
OTHER GUIDANCE ON THE TECHNICAL INFORMATION LIBRARY (TIL)
INTERNATIONAL BUILDING CODE (IBC) 2009 EDITION (SEE NOTES)
NFPA 101 LIFE SAFETY CODE (LSC) 2009 EDITION (SEE NOTES)
NFPA NATIONAL FIRE CODES WITH THE EXCEPTION OF NFPA 5000 AND NFPA 900
OCCUPATIONAL, SAFETY AND HEALTH ADMINISTRATION (OSHA) STANDARDS
VA SEISMIC DESIGN REQUIREMENTS, H-18-8
NATIONAL ELECTRIC CODE (NEC)
NATIONAL STANDARD PLUMBING CODE (NSPC)
ASME BOILER AND PRESSURE VESSEL CODE
ASME CODE FOR PRESSURE PIPING
UNIFORM FEDERAL ACCESSIBILITY STANDARDS (UFAS) INCLUDING VA SUPPLEMENT, BARRIER FREE DESIGN
BUILDING CODE REQUIREMENTS FOR REINFORCED CONCRETE, AMERICAN CONCRETE INSTITUTE AND COMMENTARY
MANUAL OF STEEL CONTRUCTION, LOAD AND RESISTANCE FACTOR DESIGN SPECIFICATIONS FOR STRUCTURAL
AMERICAN INSTITUTE OF STEEL CONSTRUCTION (AISC)
ENERGY POLICY ACT OF 2005 (EPACT)
DOE INTERIM FINAL RULE: ENERGY CONSERVATION STANDARDS FOR NEW FEDERAL, COMMERCIAL AND RESIDENTIAL BUILDINGS AND NEW LOW-RISE RESIDENTIAL BUILDINGS, 10 CFR PARTS 433, 434, AND 435.
FEDERAL LEADERSHIP IN HIGH PERFORMANCE AND SUSTAINABLE BUILDINGS: 2008 MEMORANDUM OF UNDERSTANDING
EXECUTIVE ORDER 13423: STRENGTHING FEDERAL ENVIRONMENTAL, ENERGY, AND TRANSPORTATION AND US DEPARTMENT OF VETERANS AFFAIRS; GREEN BUILDINGS ACTION PLAN
THE PROVISIONS FOR CONSTRUCTION AND SAFETY SIGNS. STATED IN THE GENERAL REQUIREMENTS SECTION
ALL VA MASTER CONSTRUCTION SPECIFICATIONS.
VENTILATION FOR ACCEPTABLE INDOOR AIR QUALITY- ASHRAE STANDARD 62.1- 2004.
SAFETY STANDARD FOR REFRIGERATION SYSTEMS- ASHRAE STANDARD 15 2007.

REVISIONS | DATE

CSHQA
C.W. MOORE PLAZA
250 S. 5TH ST. BOISE, ID 83702
(208) 343-4635 FAX (208) 343-1858
http://www.cshqa.com

JOHN D. MAULIN, ARCHITECT
C.W. MOORE PLAZA
250 S. 5TH ST
BOISE, IDAHO
PHONE: 208-343-4635 FAX: 208-343-1858

THESE DRAWINGS AND SPECIFICATIONS, AS INSTRUMENTS OF SERVICE, ARE AND SHALL REMAIN THE PROPERTY OF THE ARCHITECT / ENGINEER WHETHER THE PROJECT FOR WHICH THEY ARE MADE IS EXECUTED OR NOT. THESE DRAWINGS AND SPECIFICATIONS SHALL NOT BE USED BY ANY PERSON OR ENTITY ON OTHER PROJECTS, FOR ADDITIONS TO THIS PROJECT, OR COMPLETION OF THIS PROJECT WHEN PHASED WITHOUT THE WRITTEN CONSENT OF CSHQA OR ITS AFFILIATES. Copyright ©2011

STAMP: LICENSED ARCHITECT AR-1706 — JOHN D. MAULIN, STATE OF IDAHO — DECEMBER 01, 2011

ORIGINAL DOCUMENT SIGNED BY ARCHITECT ON FILE WITH THE OWNER. ORIGINAL SIGNED BY: JOHN D. MAULIN ORIGINAL DATE SIGNED: DECEMBER 01, 2011

CAD FILE NAME: 531-319_BG1.1.DWG

XREF FILE NAME: 531-319_xB_30X42TLBK.DWG, 531-319_xB_BASE1.DWG, 531-319_xB_BASE2.DWG

DRAWING TITLE	LIFE SAFTEY PLAN
PROJECT TITLE	BOISE VAMC NEW EXTENDED CARE UNIT BUILDING 'B' CLC
DATE	12/01/2011
PROJECT NO.	531-319
APPROVED: CHIEF OF FACILITY MANAGEMENT SERVICE	
BUILDING NUMBER	122
CHECKED	DRD/JDM
DRAWN	TM
DRAWING NO.	BG1.1
APPROVED: MEDICAL CENTER DIRECTOR	
LOCATION	VAMC BOISE, IDAHO
DWG	02 OF 78

DEPARTMENT OF VETERANS AFFAIRS

Username: tmontgomery
Dec 05, 2011 - 10:31am
O:\2010\10101.01\Arch\02_Drawings\531-319_BG1.1.dwg