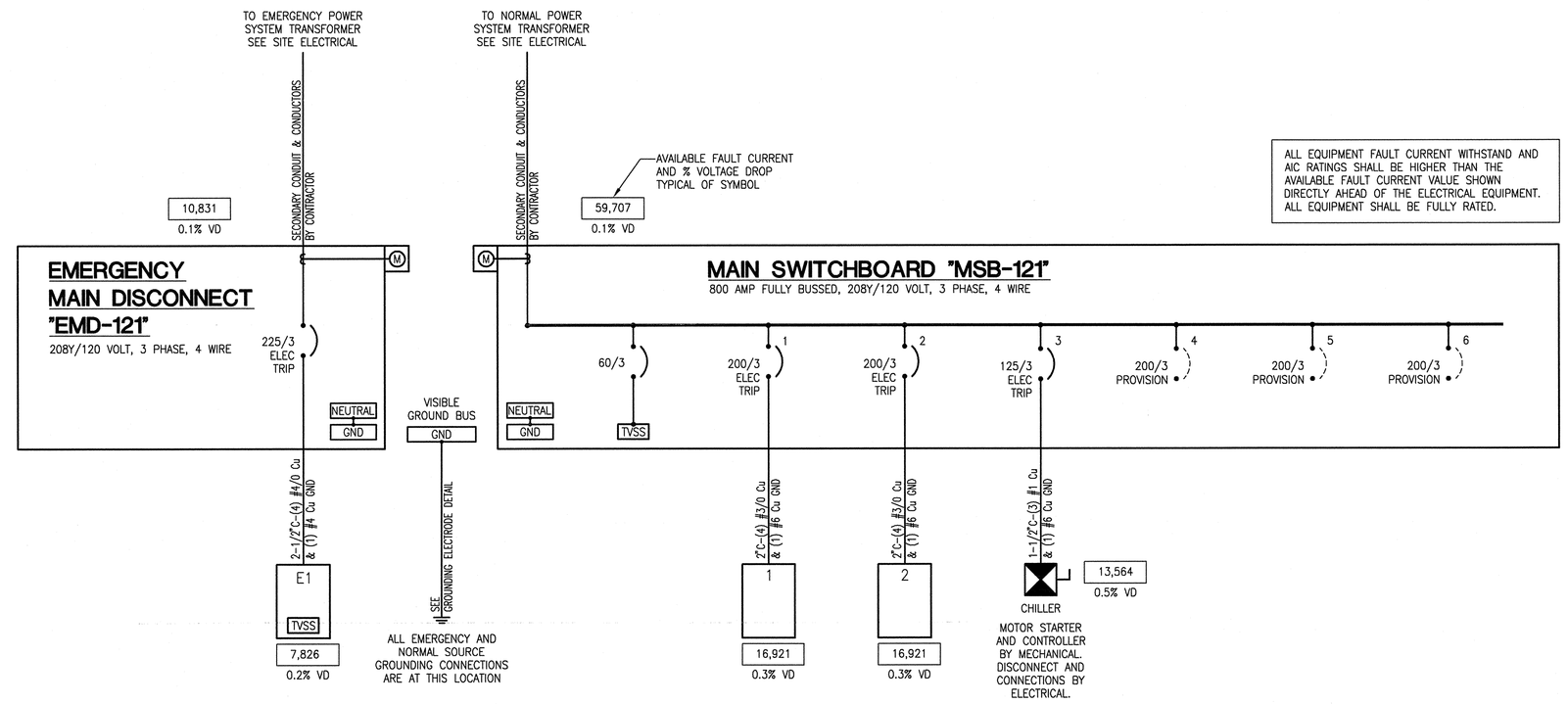

NORMAL POWER BUILDING LOAD SUMMARY

NUMBER	DESCRIPTION	208-V AMPERE TOTALS A	B	C	REMARKS
1	PANEL "1"	114	111	117	
2	PANEL "2"	173	196	195	
3	CHILLER CH-A1	88	88	88	
	TOTAL CONNECTED LOAD:	375	395	400	12/01/11

N.E.C. DEMAND CALCULATIONS

	ACTUAL KVA	DEMAND FACTOR	DEMAND KVA	
LIGHTING AND OTHER CONTINUOUS LOAD:	4.9	125%	6.2	Excludes track and show window lighting.
TRACK LIGHTING:	0.0	N/A	0.0	Length of track: 0 ft
SHOW WINDOWS:	0.0	N/A	0.0	Length of show window: 0 ft
RECEPTACLE LOAD:	25.0	70%	17.5	100% of the first 10 kVA, plus 50% over 10 kVA.
KITCHEN EQUIPMENT LOAD:	48.2	65%	31.3	Based on 14 piece(s) of equipment.
HEATING (COINCIDENTAL) LOAD:	5.6	100%	5.6	Includes space heat in excess of cooling and other electric heat.
MOTORS AND OTHER NON-CONTINUOUS OR MISCELLANEOUS LOAD:	25.0	100%	25.0	All other loads excluding maximum motor load.
LARGEST MOTOR LOAD:	31.8	125%	39.8	
TOTALS:	140.5	89%	125.4	MINIMUM 3-PHASE FEEDER: 357-AMPS

PANEL "E1"
208Y/120-VOLT, 3-PHASE, 4-WIRE
225-AMP, MAIN LUGS ONLY

NOTES: COMMERCIAL BOLT-ON CIRCUIT BREAKER PANELBOARD.
PROVIDE FLOOR TO CEILING REMOVEABLE METAL SKIRTS BY PANEL MFR. IN COLOR TO MATCH PANEL.
PROVIDE ARC FLASH CIRCUIT INTERRUPTER TYPE BREAKERS PER NEC 210.13 AND 210.18.

MOUNTING: SURFACE

CKT NO	LOAD DESCRIPTION	REF NO	BRKR TYPE	LOAD AMPS	BREAKER P	BREAKER AMP	PHASE AMPS A	B	C	BREAKER AMP	BREAKER P	LOAD AMPS	BRKR TYPE	REF NO	LOAD DESCRIPTION	CKT NO
1	LTS- EXTERIOR			1.7	1	20	4.3			20	1	2.6			LTS- NORTHWEST BEDROOMS,109, 122	2
3	LTS- OFFICE 120, CORRIDOR C14			2.6	1	20		5.0		20	1	2.4			LTS- SOUTHEAST BEDROOMS,124,125	4
5	P-HW-1, P-HW-2, MS-1			8.8	1	20			11.9	20	1	3.1			LTS- SUPPORT RMS AND CORRIDORS	6
7	FCU-A1, A2, A3			10.5	1	20	15.5			20	1	5.0	LO		FIRE ALARM PANEL	8
9	FCU-A4, A18, A5			11.9	1	20		27.9		30	2	16.0			TELECOM UPS A	10
11	FCU-A6, A7, A8			10.5	1	20			26.5	**	*	16.0			TELECOM UPS A	12
13	FCU-A10, A11, A12			13.3	1	20	29.3			30	2	16.0			TELECOM UPS B	14
15	FCU-A13, A14, A15			11.9	1	20		27.9		**	*	16.0			TELECOM UPS B	16
17	FCU-A16, A16, A17			14.8	1	20			19.3	20	1	4.5			REC - TELECOM	18
19	ERU-A1			9.2	3	20	11.2			20	1	2.0			ACCESS CONTROL SYSTEM	20
21	ERU-A1			9.2	*	**		14.2		20	1	5.0			NURSE CALL SYSTEM	22
23	ERU-A1			9.2	*	**			14.2	20	1	5.0			DOOR SECURITY SYSTEM	24
25	P-HWHS-1 & 2			13.2	3	20	23.2			20	1	10.0			NORTH ENTRY DOOR OPERATOR	26
27	P-HWHS-1 & 2			13.2	*	**		23.2		20	1	10.0			SOUTH ENTRY DOOR OPERATOR	28
29	P-HWHS-1 & 2			13.2	*	**			19.4	15	2	6.2			CU-1, FC-1	30
31	REC-BEDROOMS - 113/108/107/105			6.0	1	20	12.2			**	*	6.2			CU-1, FC-1	32
33	REC-BEDROOMS - 121/119/118/115			6.0	1	20		11.0		20	1	5.0			RESIDENT ROOM ACCESS	34
35	REC-BEDROOMS - 126/127/128/129			6.0	1	20			11.0	20	1	5.0			MECHANICAL DOC PANEL	36
37	REC-PHARMACY ACUDOSE			1.5	1	20	6.0			20	1	4.5			REC-NURSE STORAGE 104	38
39	REC-PHARMACY ACUDOSE			1.5	1	20		4.5		20	1	3.0			REC-HOME OFFICE 120	40
41	REC-PHARMACY ACUDOSE			1.5	1	20			6.0	20	1	4.5			REC-HOME OFFICE 120	42
	PROJECT #10101 Panels					PANEL TOTALS:	102	114	108						12/01/11	

	ACTUAL KVA	DEMAND FACTOR	DEMAND KVA	
LIGHTING AND OTHER CONTINUOUS LOAD:	1.5	125%	1.9	Excludes track and show window lighting.
TRACK LIGHTING:	0.0	N/A	0.0	Length of Track: 0 ft
SHOW WINDOWS:	0.0	N/A	0.0	Length of show window: 0 ft
RECEPTACLE LOAD:	4.7	100%	4.7	100% of the first 10 kVA, plus 50% over 10 kVA.
KITCHEN EQUIPMENT LOAD:	0.0	100%	0.0	Based on 0 pieces of equipment.
HEATING (COINCIDENTAL) LOAD:	0.0	100%	0.0	Includes space heat in excess of cooling and other electric heat.
HEATING OR OTHER NON-COINCIDENTAL LOAD:	0.0	0%	0.0	Smaller of heat or cooling when loads do not operate simultaneously.
MOTORS AND OTHER NON-CONTINUOUS OR MISCELLANEOUS LOAD:	27.9	100%	27.9	All other loads excluding maximum motor load.
LARGEST MOTOR LOAD:	4.8	125%	5.9	
TOTALS:	38.8	104%	40.4	MINIMUM FEEDER: 112-AMPS

PANEL "1"
208Y/120-VOLT, 3-PHASE, 4-WIRE
225-AMP, MAIN LUGS ONLY

NOTES: COMMERCIAL BOLT-ON CIRCUIT BREAKER PANELBOARD.
PROVIDE FLOOR TO CEILING REMOVEABLE METAL SKIRTS BY PANEL MFR. IN COLOR TO MATCH PANEL.
PROVIDE ARC FLASH CIRCUIT INTERRUPTER TYPE BREAKERS PER NEC 210.13 AND 210.18.

MOUNTING: SURFACE

CKT NO	LOAD DESCRIPTION	REF NO	BRKR TYPE	LOAD AMPS	BREAKER P	BREAKER AMP	PHASE AMPS A	B	C	BREAKER AMP	BREAKER P	LOAD AMPS	BRKR TYPE	REF NO	LOAD DESCRIPTION	CKT NO
1	LTS- BEDROOMS 108-115, 109			6.3	1	20	10.7			20	1	4.4			LTS- 107-128	2
3	LTS- BEDROOMS 116-119, 122			3.7	1	20		10.1		20	1	6.4			LTS- DEN, GYM, 126-127	4
5	LTS- SUPPORT ROOMS			4.7	1	20			13.0	20	1	8.3			LTS- 130, C14	6
7	SPARE				1	20	7.4			20	1	7.4			LTS- 102, 103	8
9	SPARE				1	20		0.0		20	1				SPARE	10
11	SPARE				1	20			12.0	20	1	12.0			LKORAL - RM 129	12
13	ICE MELT CABLE-SOUTH DRAINS		GFPE	8.3	1	20	20.3			20	1	12.0			LKORAL - RM 128	14
15	ICE MELT CABLE-NORTH DRAINS		GFPE	8.3	1	20		20.3		20	1	12.0			LKORAL - RM 127	16
17	ICE MELT CABLE-EAST GUTTERS		GFPE	8.3	1	20			20.3	20	1	12.0			LKORAL - RM 126	18
19	ICE MELT CABLE-NORTH GUTTERS		GFPE	8.3	1	20	20.3			20	1	12.0			LKORAL - RM 121	20
21	ICE MELT CABLE-WEST GUTTERS		GFPE	8.3	1	20		20.3		20	1	12.0			LKORAL - RM 119	22
23	REC-ROOFTOP			9.0	1	20			21.0	20	1	12.0			LKORAL - RM 116	24
25	SPARE				1	20	12.0			20	1	12.0			LKORAL - RM 115	26
27	REC - KITCHEN ISLAND			4.5	1	20		16.5		20	1	12.0			LKORAL - RM 113	28
29	REC - COUNTER TOP			3.0	1	20			7.0	20	1	4.0			REC - LAUNDRY/STAFF TOILET/DBF	30
31	REC - BEDROOM 113			10.5	1	20	21.0			20	1	10.5			REC - BEDROOM 108	32
33	REC - BEDROOM 115			10.5	1	20		21.0		20	1	10.5			REC - BEDROOM 107	34
35	REC - BEDROOM 116			10.5	1	20			21.0	20	1	10.5			REC - BEDROOM 105	36
37	REC - BEDROOM 119			10.5	1	20	22.5			20	1	12.0			LKORAL - RM 108	38
39	REC - BEDROOM 121			10.5	1	20		22.5		20	1	12.0			LKORAL - RM 107	40
41	REC - BEDROOM 129			10.5	1	20			22.5	20	1	12.0			LKORAL - RM 105	42
	PROJECT #10101 Panels					PANEL TOTALS:	114	111	117						12/01/11	

	ACTUAL KVA	DEMAND FACTOR	DEMAND KVA	
LIGHTING AND OTHER CONTINUOUS LOAD:	4.9	125%	6.2	Excludes track and show window lighting.
TRACK LIGHTING:	0.0	N/A	0.0	Length of Track: 0 ft
SHOW WINDOWS:	0.0	N/A	0.0	Length of show window: 0 ft
RECEPTACLE LOAD:	12.9	89%	11.5	100% of the first 10 kVA, plus 50% over 10 kVA.
KITCHEN EQUIPMENT LOAD:	0.9	100%	0.9	Based on 2 pieces of equipment.
HEATING (COINCIDENTAL) LOAD:	5.0	100%	5.0	Includes space heat in excess of cooling and other electric heat.
HEATING OR OTHER NON-COINCIDENTAL LOAD:	0.0	0%	0.0	Smaller of heat or cooling when loads do not operate simultaneously.
MOTORS AND OTHER NON-CONTINUOUS OR MISCELLANEOUS LOAD:	17.3	100%	17.3	All other loads excluding maximum motor load.
LARGEST MOTOR LOAD:	0.0	125%	0.0	
TOTALS:	41.0	99%	40.8	MINIMUM FEEDER: 113-AMPS

PANEL "2"
208Y/120-VOLT, 3-PHASE, 4-WIRE
225-AMP, MAIN LUGS ONLY

NOTES: COMMERCIAL BOLT-ON CIRCUIT BREAKER PANELBOARD.
PROVIDE FLOOR TO CEILING REMOVEABLE METAL SKIRTS BY PANEL MFR. IN COLOR TO MATCH PANEL.
PROVIDE ARC FLASH CIRCUIT INTERRUPTER TYPE BREAKERS PER NEC 210.13 AND 210.18.

MOUNTING: SURFACE

CKT NO	LOAD DESCRIPTION	REF NO	BRKR TYPE	LOAD AMPS	BREAKER P	BREAKER AMP	PHASE AMPS A	B	C	BREAKER AMP	BREAKER P	LOAD AMPS	BRKR TYPE	REF NO	LOAD DESCRIPTION	CKT NO
1	REC-BEDROOM 128			10.5	1	20	25.5			20	1	15.0			REFRIGERATOR W/CEAH20	2
3	REC-BEDROOM 127			10.5	1	20		17.5		20	1	7.0			ICE MACHINE	4
5	REC-BEDROOM 126			10.5	1	20			25.5	20	1	15.0			REFRIGERATOR NO ICE OR H20	6
7	REC-PHAR/CLEAN/SOILED/HWC			7.5	1	20	8.5			15	1	1.0			FIREPLACE	8
9	REC-SPA 109			6.0	1	20		21.0		20	2	15.0			FOOD WARMER - WALL	10
11	REC-PUB TOILET 122			1.5	1	20			16.5	**	*	15.0			FOOD WARMER - WALL	12
13	REC-HOME GYM 125			3.0	1	20	18.0			20	2	15.0			FOOD WARMER - WALL	14
15	REC-HOME GYM 125			3.0	1	20		18.0		**	*	15.0			FOOD WARMER - WALL	16
17	REC-HOME GYM 125			3.0	1	20			18.0	20	2	15.0			FOOD WARMER - CEILING	18
19	REC-DEN 124			6.0	1	20	21.0			**	*	15.0			FOOD WARMER - CEILING	20
21	REC-LMNG 130 DINING 102			7.5	1	20		22.5		20	2	15.0			FOOD WARMER - CEILING	22
23	REC-DINING ROOM 102			6.0	1	20			21.0	**	*	15.0			FOOD WARMER - CEILING	24
25	REC-LMNG ROOM 130			6.0	1	20	18.0			20	1	12.0			WASHING MACHINE	26
27	REC-CORR C14			12.0	1	20		30.0		30	2	18.0			DRYER	28
29	REC-CORR C12/C13 - VEST 114			7.5	1	20			25.5	**	*	18.0			DRYER	30
31	VERNA CARE MACERATOR			4.8	2	20	39.4			50	2	34.6			OVEN	32
33	VERNA CARE MACERATOR			4.8	*	**		39.4		**	*	34.6			OVEN	34
35	HYGIENE SYSTEM BATH			5.8	1	20			43.5	50	2	37.7			STOVE TOP	36
37	TOWEL WARMER			5.0	1	20	42.7			**	*	37.7			STOVE TOP	38
39	MICROWAVE			10.0	1	20		47.7		50	2	37.7			DISH WASHER	40
41	TRASH COMPACTOR			7.2	1	20			44.9	**	*	37.7			DISH WASHER	42
	PROJECT #10101 Panels					PANEL TOTALS:	173	196	195						12/01/11	

	ACTUAL KVA	DEMAND FACTOR	DEMAND KVA	
LIGHTING AND OTHER CONTINUOUS LOAD:	0.0	125%	0.0	Excludes track and show window lighting.
TRACK LIGHTING:	0.0	N/A	0.0	Length of Track: 0 ft
SHOW WINDOWS:	0.0	N/A	0.0	Length of show window: 0 ft
RECEPTACLE LOAD:	12.1	91%	11.0	100% of the first 10 kVA, plus 50% over 10 kVA.
KITCHEN EQUIPMENT LOAD:	47.3	65%	30.7	Based on 12 pieces of equipment.
HEATING (COINCIDENTAL) LOAD:	0.6	100%	0.6	Includes space heat in excess of cooling and other electric heat.
HEATING OR OTHER NON-COINCIDENTAL LOAD:	0.0	0%	0.0	Smaller of heat or cooling when loads do not operate simultaneously.
MOTORS AND OTHER NON-CONTINUOUS OR MISCELLANEOUS LOAD:	7.7	100%	7.7	All other loads excluding maximum motor load.
LARGEST MOTOR LOAD:	0.0	125%	0.0	
TOTALS:	67.7	74%	50.1	MINIMUM FEEDER: 139-AMPS

REVISIONS | DATE

CSHQA
C.W. MOORE PLAZA
250 S. 5TH ST. BOISE, ID 83702
(208) 343-4635 FAX (208) 343-1858
http://www.cshqa.com

AMY K. DOCKTER, P.E.
C.W. MOORE PLAZA
250 S. 5TH ST
BOISE, IDAHO
PHONE: 208-343-4635 FAX: 208-343-1858

THESE DRAWINGS AND SPECIFICATIONS, AS INSTRUMENTS OF SERVICE, ARE AND SHALL REMAIN THE PROPERTY OF THE ARCHITECT / ENGINEER WHETHER THE PROJECT FOR WHICH THEY ARE MADE IS EXECUTED OR NOT. THESE DRAWINGS AND SPECIFICATIONS ARE NOT TO BE USED BY ANY PERSON OR ENTITY ON OTHER PROJECTS, FOR ADDITIONS TO THIS PROJECT, OR COMPLETION OF THIS PROJECT WHEN PHASED WITHOUT THE WRITTEN CONSENT OF CSHQA OR ITS AFFILIATES. Copyright ©2011

STAMP
PROFESSIONAL ENGINEER 9201 12-1-11 STATE OF IDAHO AMY K. DOCKTER

CAD FILE NAME: 531-319_Xa_AE31.DWG
XREF FILE NAME: 531-319_xA_30X42TLBK.DWG

DRAWING TITLE: SINGLE LINE DIAGRAM AND SCHEDULES

PROJECT TITLE: BOISE VAMC NEW EXTENDED CARE UNIT BUILDING 'A' CLC

DATE: 12/01/2011
PROJECT NO. 531-319

APPROVED: CHIEF OF FACILITY MANAGEMENT SERVICE
APPROVED: MEDICAL CENTER DIRECTOR

BUILDING NUMBER 121 | CHECKED AKD | DRAWN CRP
LOCATION VAMC BOISE, IDAHO

DRAWING NO. AE3.1
DWG 52 OF 58

DEPARTMENT OF VETERANS AFFAIRS

Username: dpirc
Dec 01, 2011 - 4:52pm
Q:\2010\10101.0\Elec\02_Drawings\531-319_AE3.1.dwg

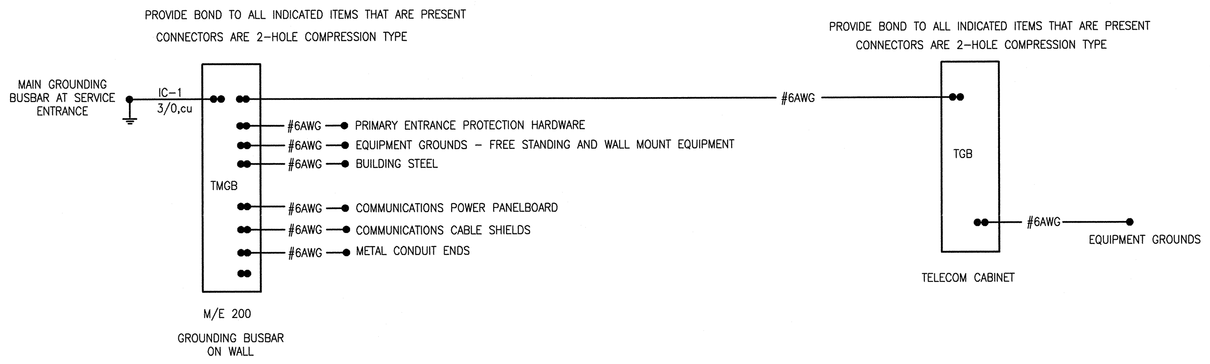

1 TELECOMMUNICATION GROUNDING SCHEMATIC
SCALE NONE

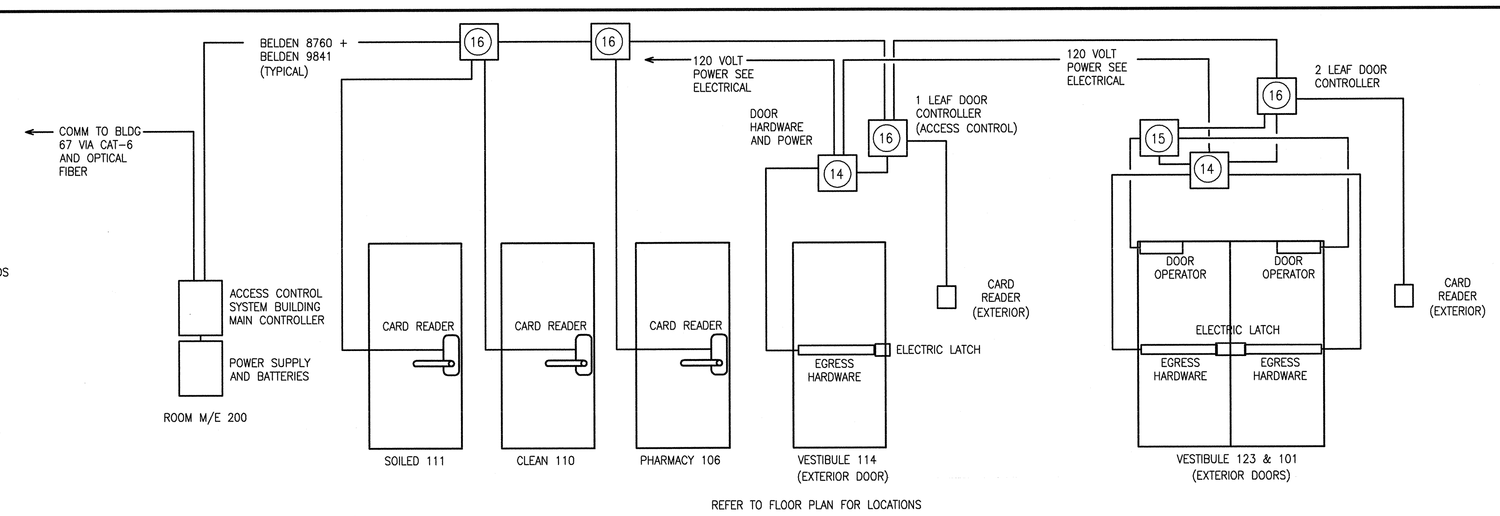

5 ACCESS CONTROL SYSTEM
SCALE NONE

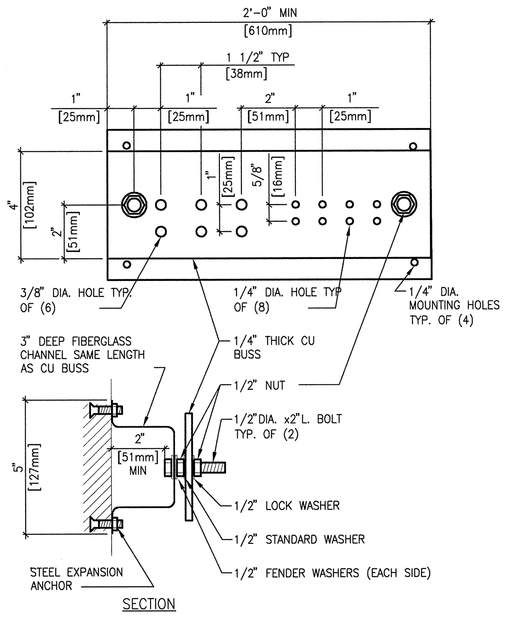

GENERAL NOTES
1. ALL HARDWARE SHOWN SHALL BE STAINLESS STEEL.
2. PROVIDE 1 MOUNTING POINT PER 12" OF BAR LENGTH.
3. HOLES MAY BE ADDED IF REQUIRED.
4. TGB – 1'-0" MIN.

2 TMGB DETAIL
SCALE NONE

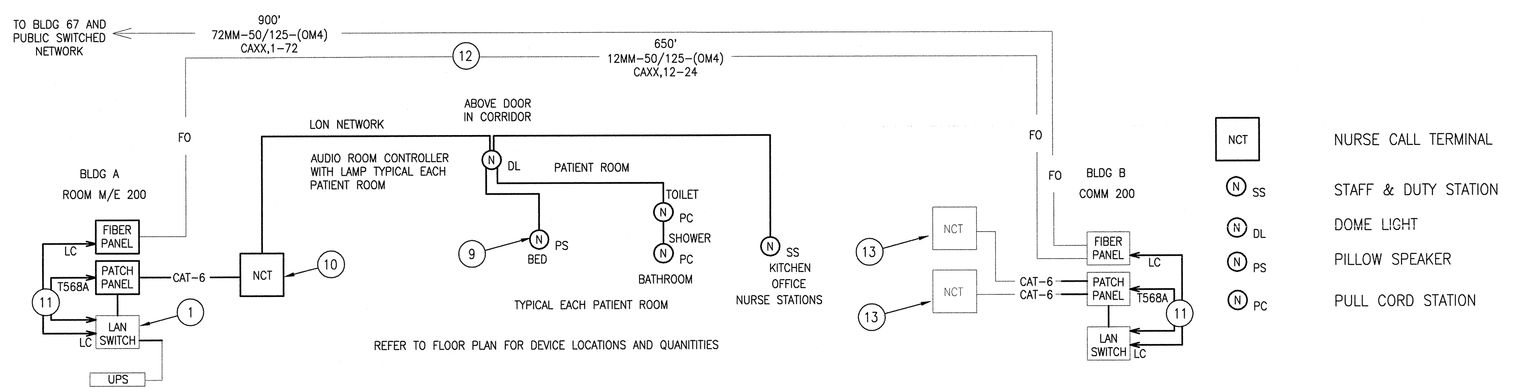

6 NURSE CALL SYSTEM
SCALE

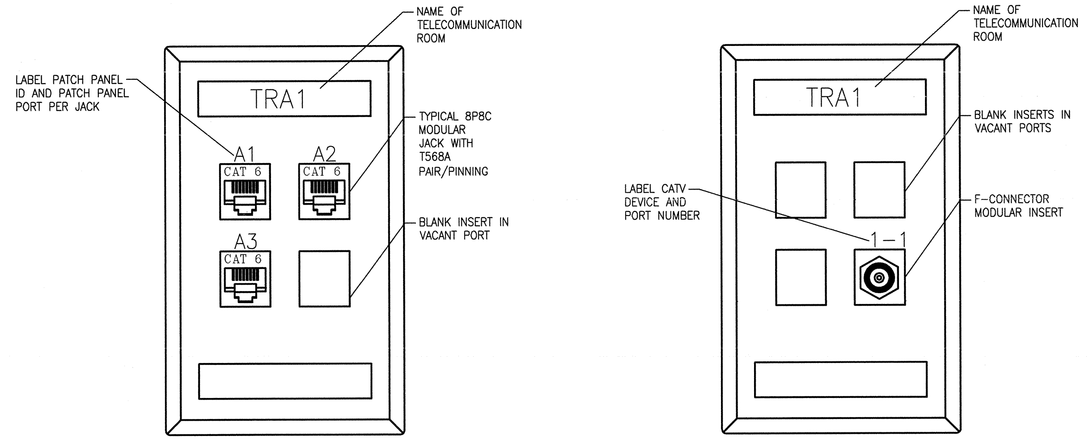

7 TYPICAL OUTLETS
SCALE NONE

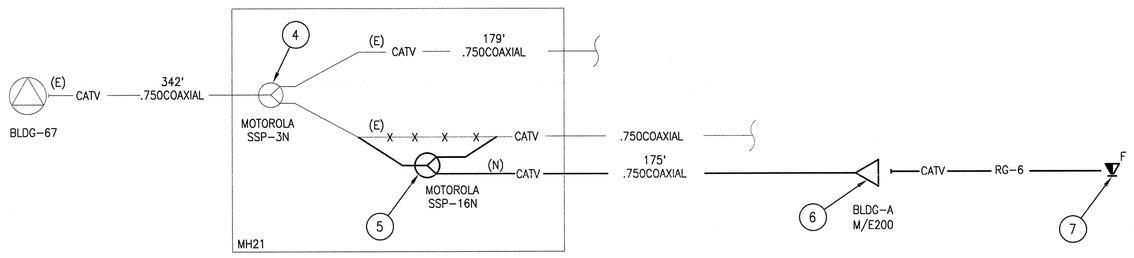

3 MATV SCHEMATIC
SCALE NONE

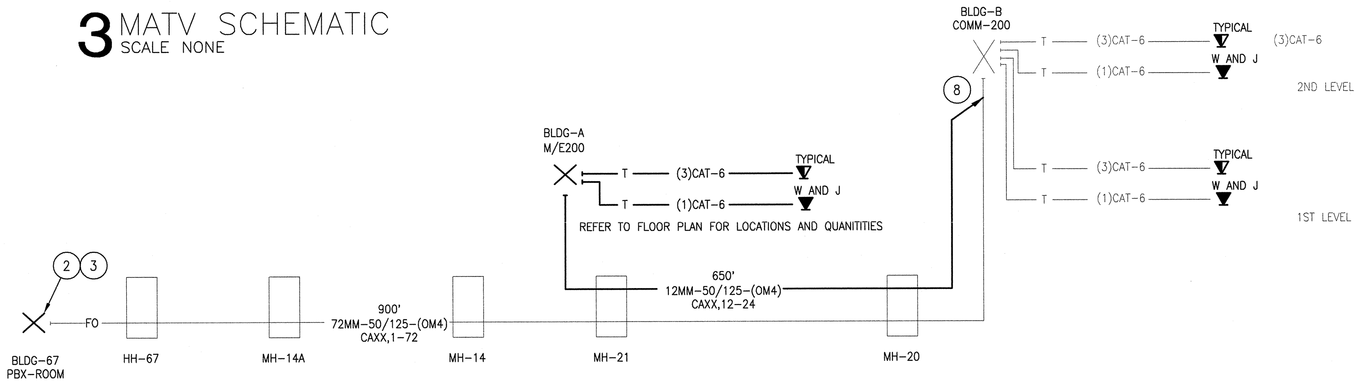

4 TELECOMMUNICATION CABLE SCHEMATIC
SCALE NONE

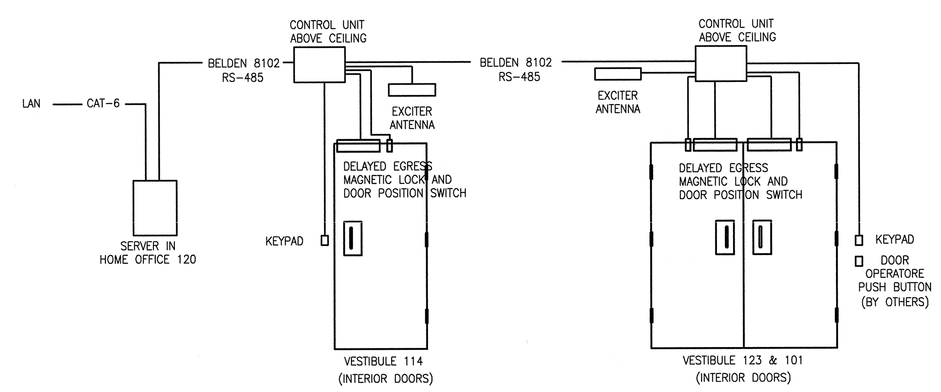

8 PATIENT WANDER PREVENTION SYSTEM
SCALE NONE

GENERAL NOTES:

A. REFER TO DIVISIONS 26, 27 AND 28 OF PROJECT MANUAL FOR RELATED SPECIFICATION SECTIONS.

B. CCTV MEDIA SHALL BE INSTALLED IN CABLE TRAY WITH OTHER SIMILAR MEDIA. ACCESS CONTROL SHALL BE INSTALLED IN DEDICATED CONDUIT.

C. OWNER SHALL PROVIDE TELEPHONE DEVICES, LINE CORDS, PATCH CORDS AND ACTIVATION OF VOICE SYSTEM.

D. OWNER SHALL PROVIDE DATA DEVICES, NETWORK SWITCHES, PATCH CORDS, EQUIPMENT CABLES AND ACTIVATION OF DATA NETWORK.

E. REFER TO FLOOR PLANS FOR LOCATIONS AND QUANTITIES.

F. THIS DRAWINGS INCLUDES SEVERAL LOW VOLTAGE ELECTRICAL CABLING SYSTEMS TO BE PROVIDED UNDER THE ELECTRICAL SCOPE OF WORK. MASTER ANTENNA TELEVISION (MATV), ACCESS CONTROL, VOICE/DATA, PATIENT WANDER PROTECTION, NURSE CALL AND TELECOMMUNICATIONS BONDING AND GROUNDING.

G. THE MATV SYSTEM INCLUDES DIRECTIONAL TAPS AND CABLE FROM THE UNDERGROUND CONDUIT SYSTEM INTO THE BUILDING, A MULTIUSER AMPLIFIER AND DROP CABLES TO THE TELEVISION LOCATIONS. TELEVISIONS ARE OWNER PROVIDED. RE: AE3.2-3.

H. THE ACCESS CONTROL SYSTEM INCLUDES DOOR CONTROLLERS CENTRALIZED IN THE TELECOMMUNICATION SPACE, POWER SUPPLIES, CABLING, DOOR CONTACTS, CARD READERS, REQUEST TO EXIT, MAGNETIC LOCKS AND CONNECTIVITY TO THE EXISTING MONITORING STATION. COORDINATE WITH DOOR HARDWARE RE: AA6.2. AND AE3.2-5.

I. THE VOICE/DATA SYSTEM IN INCLUDES OPTICAL FIBER CABLE FROM BUILDING 67, CATEGORY 6 HORIZONTAL CABLING, TELECOMMUNICATION OUTLET LOCATIONS TO SUPPORT PHONE, COMPUTERS, WIRELESS DEVICES, DISTRIBUTED ANTENNA SYSTEM (DAS) AND OTHER UTILITY REMOTE CONTROLS AND MONITORING. RE: AE3.2-4.

J. THE PATIENT WANDER PROTECTION SYSTEM INCLUDES SENSORS ON EXTERIOR DOORS, WIRING, ANTENNAS, CONTROL STATIONS AND PATIENT-WORN DETECTABLE DEVICES. RE: AE3.2-8.

K. THE NURSE CALL SYSTEM INCLUDES A CONTROLLER IN THE TELECOMMUNICATION SPACE, DOME LIGHTS ROOM CONTROLLERS IN THE CORRIDORS, SINGLE PATIENT STATIONS IN THE MONITORED ROOMS, SPEAKER PILLOWS IN THE PATIENT BEDS, EMERGENCY PULL CORDS IN THE BATHROOMS, STAFF STATIONS IN THE KITCHEN AND OFFICE AND CONNECTIVITY TO THE MASTER NURSE STATION AND SIMILAR SYSTEM IN OTHER BUILDINGS VIA OPTICAL FIBER. RE: AE3.2-6.

L. THE TELECOMMUNICATIONS GROUNDING SYSTEM INCLUDES THE TELECOMMUNICATIONS MAIN GROUNDING BUSBAR IN THE TELECOMMUNICATIONS SPACE, A 3/0 BONDING CONDUCTOR TO THE ELECTRICAL SERVICE ENTRANCE GROUNDING ELECTRODE, #6 BONDING CONDUCTORS TO TELECOMMUNICATION BUSBARS AND BONDING CONDUCTORS TO METALLIC CONDUITS, CABLE TRAYS AND OTHER LOW VOLTAGE ELECTRICAL SYSTEM GROUND LUGS. RE: AE3.2-1 AND -2.

SHEET NOTES:

1. BY OWNER. CONNECTION PROVIDES LINK TO DEFAULT GATEWAY LOCATED IN BLDG 67.
2. PROVIDE PATCH CORDS AS REQUIRED TO EXTEND NEW SYSTEMS TO OTHER BUILDINGS AND EXISTING SYSTEMS.
3. PROVIDE PATCH CORDS FOR MONITORING, SECURITY AND LIFE SAFETY SYSTEMS ONLY. VIDEO SURVEILLANCE, DATA AND VOICE CONNECTIVITY PROVIDED BY OWNER.
4. EXISTING MOTOROLA SSP-3N SPLITTER IN SIGNAL VAULT MH21.
5. NEW MOTOROLA SSP-16N SPLITTER CUT INTO EXISTING CABLE. CONNECT EXISTING CABLE TO IN PORT AND LOW LOSS OUT PORT AS SHOWN. CONNECT NEW CABLE TO HIGH LOSS PORT.
6. NEW MULTI PORT BUILDING AMPLIFIER.
7. STRUCTURED CABLING OUTLET WITH F-CONNECTOR MODULE. RG-6 CABLE HOME RUN TO AMPLIFIER. SEE PLANS FOR LOCATIONS.
8. IN COMM ROOM 200 OF BUILDING B, SPLICE 12 STRANDS IN ORANGE BUFFER TUBE OF EXISTING CABLE FROM BLDG 67 TO NEW 12-STRAND CABLE TO BUILDING A. RE: SDE2.1-1.
9. PILLOW SPEAKER TO PROVIDE NURSE CALL, ROOM LIGHT CONTROL, TELEVISION V CONTROL AND TELEVISION SOUND TO PATIENT'S BED.
10. WALL MOUNT NURSE CALL TERMINAL CABINET WITH POWER SUPPLY. TERMINATE SEGMENT CABLES AND LABEL THE INSTALLATION.
11. PROVIDE PATCH CORDS TO CONNECT BUILDING A NURSE CALL SYSTEM TO BUILDING B NURSE CALL SYSTEM VIA 50 MICRON MULTIMODE FIBER.
12. OPTICAL FIBER TO BUILDING. RE: AE3.2-3.
13. NURSE CALL TERMINAL SERVING BUILDING B. RE: BE3.2-5
14. ELECTRICAL POWER ENCLOSURE TO SUPPORT DOOR HARDWARE.
15. ENCLOSURE FOR DOOR OPERATOR MOTOR CONTROLS.
16. ENCLOSURE FOR ACCESS CONTROL DOOR CONTROLLER.
17. ENCLOSURE FOR ACCESS CONTROL DOOR CONTROLLER, POWER SUPPLY AND BATTERIES.

REVISIONS	DATE

CSHQA
C.W. MOORE PLAZA
250 S. 5TH ST. BOISE, ID 83702
(208) 343-4635 FAX (208) 343-1858
http://www.cshqa.com

AMY K. DOCKTER, P.E.
C.W. MOORE PLAZA
250 S. 5TH ST
BOISE, IDAHO
PHONE: 208-343-4635 FAX: 208-343-1858

THESE DRAWINGS AND SPECIFICATIONS, AS INSTRUMENTS OF SERVICE, ARE AND SHALL REMAIN THE PROPERTY OF THE ARCHITECT / ENGINEER WHETHER THE PROJECT FOR WHICH THEY ARE MADE IS EXECUTED OR NOT. THESE DRAWINGS AND SPECIFICATIONS SHALL NOT BE USED BY ANY PERSON OR ENTITY ON OTHER PROJECTS, FOR ADDITIONS TO THIS PROJECT, OR COMPLETION OF THIS PROJECT WHEN PHASED WITHOUT THE WRITTEN CONSENT OF CSHQA OR ITS AFFILIATES. Copyright ©2011

STAMP: PROFESSIONAL ENGINEER REGISTERED 201 12-1-11 STATE OF IDAHO AMY K. DOCKTER

CAD FILE NAME: 531-319_AE3.2.DWG
XREF FILE NAME: 531-319_xA_30X42TLBK.DWG

DRAWING TITLE: TELECOMMUNICATION SCHEMATICS

APPROVED: CHIEF OF FACILITY MANAGEMENT SERVICE
APPROVED: MEDICAL CENTER DIRECTOR

PROJECT TITLE: BOISE VAMC NEW EXTENDED CARE UNIT BUILDING 'A' CLC

BUILDING NUMBER: 121 | CHECKED: AKD | DRAWN: JDR

LOCATION: VAMC BOISE, IDAHO

DATE: 12/01/2011
PROJECT NO. 531-319
DRAWING NO. AE3.2
DWG 53 OF 58

DEPARTMENT OF VETERANS AFFAIRS

Username: jromlein
Dec 01, 2011 – 2:02pm
Q:\2010\101010\D\ComEng\02_Drawings\531-319_AE3.2.dwg

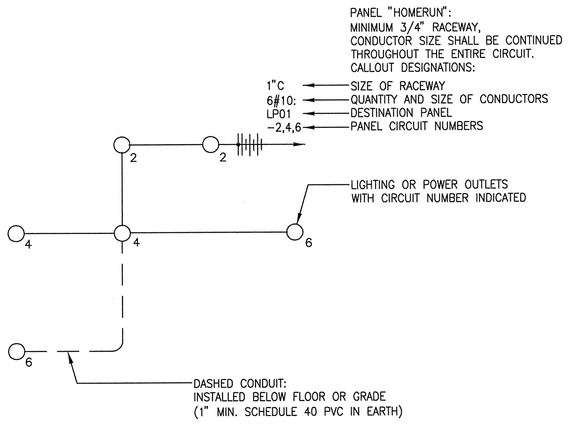

NOTES:
1. ALL HOMERUNS ARE TO BE 3/4" CONDUIT MINIMUM.
2. ALL CONDUCTORS SHALL BE #12 UNLESS OTHERWISE NOTED.
3. ALL CONDUITS SHALL CONTAIN A GROUND CONDUCTOR SIZED PER NEC.
4. NO EDISON CIRCUITS ALLOWED.

1 CIRCUITING SYMBOLS
SCALE NONE

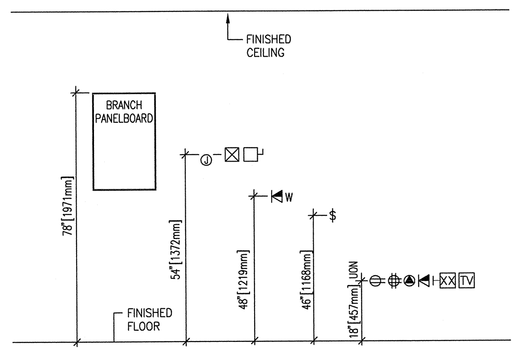

NOTES:
1. VERIFY ALL MOUNTING HEIGHTS WITH CABO/ANSI A117.1, U.F.A.S. REQUIREMENTS AND ALL OTHER APPLICABLE CODES.
2. COORDINATE MOUNTING HEIGHTS WITH ALL ARCHITECTURAL PLANS, ELEVATIONS AND DETAILS PRIOR TO ROUGH-IN. INFORM ARCHITECT OF ANY CONFLICTS.

2 STANDARD MOUNTING HEIGHTS
SCALE NONE

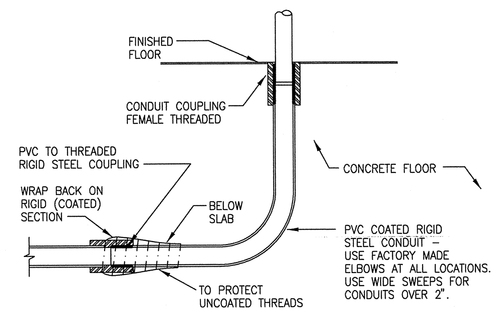

3 BELOW GRADE CONDUIT
SCALE NONE

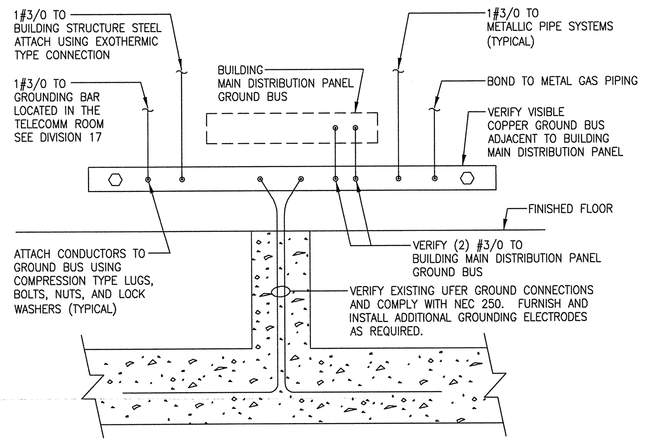

NOTES:
1. ALL GROUNDING AND BONDING CONDUCTORS SHALL BE IN ACCORDANCE WITH NEC 250.

4 GROUNDING DETAIL
SCALE NONE

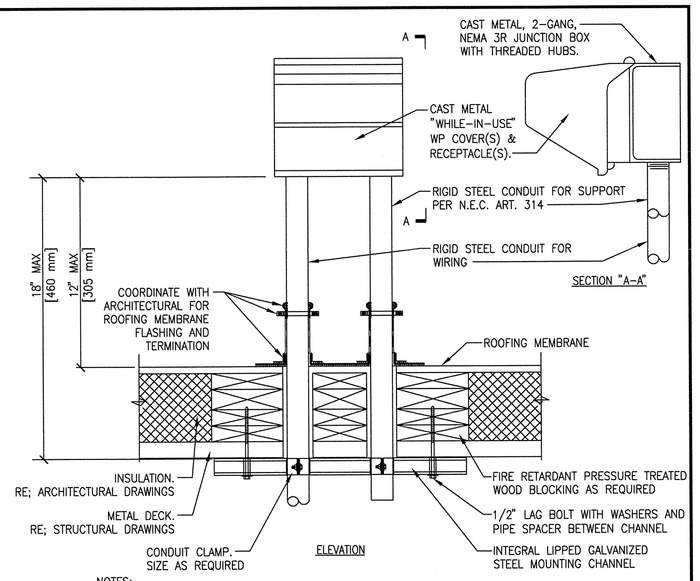

NOTES:
1. MAINTAIN A MINIMUM CLEARANCE OF 12" [308mm] ON ALL SIDES OF ROOF PENETRATION FROM WALLS, CURBS, AND OTHER PROJECTIONS TO FACILITATE PROPER FLASHING.
2. FLANGES OF ADJACENT FLASHINGS SHALL NOT BE CUT OR OVERLAPPED.
3. VERIFY ROOF & STRUCTURAL SYSTEM WITH ARCHITECT.
4. COORDINATE FLASHING INSTALLATION WITH ROOFING CONTRACTOR TO ENSURE PROPER METHODS & MATERIALS ARE USED TO MAINTAIN ROOF WARRANTY.

5 ROOF PENETRATION AND RECEPTACLE DETAIL
SCALE NONE

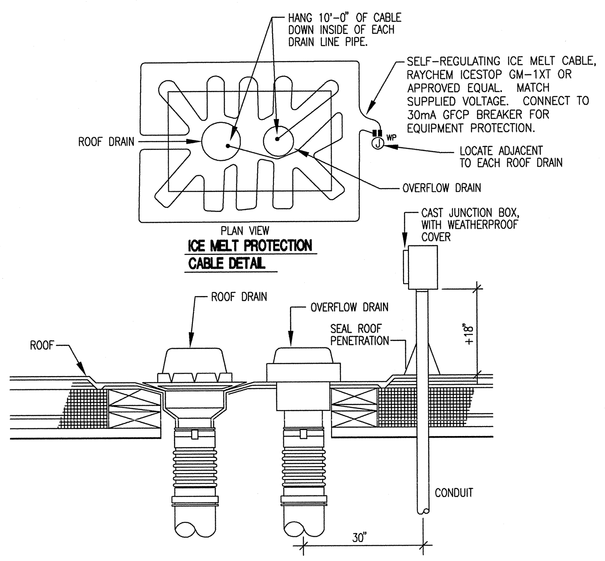

6 ROOF DRAIN ICE MELT CABLE
SCALE NONE

7 NOT USED
SCALE NONE

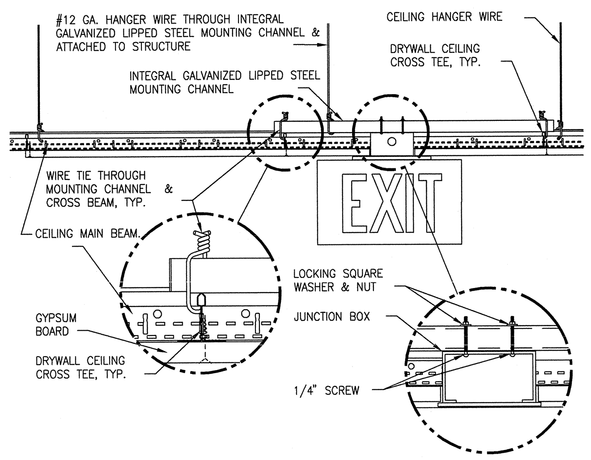

8 EXIT SIGN MOUNTING–GYPBOARD HARD CEILING
SCALE NONE

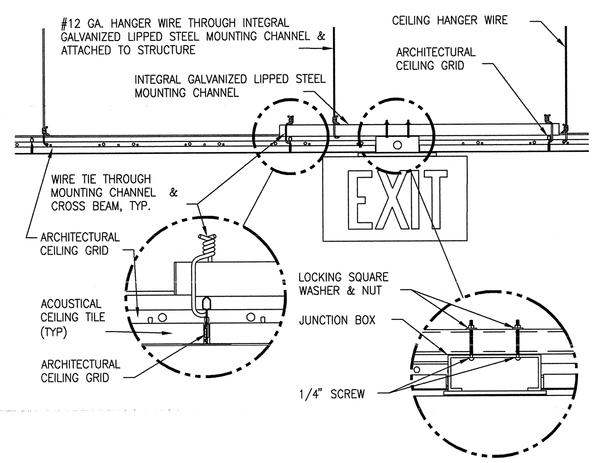

9 EXIT SIGN MOUNTING – LAY–IN CEILING
SCALE NONE

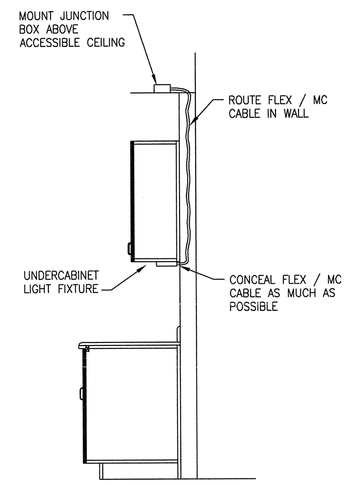

10 UNDERCABINET LIGHT FIXTURE MOUNTING DETAIL
SCALE NONE

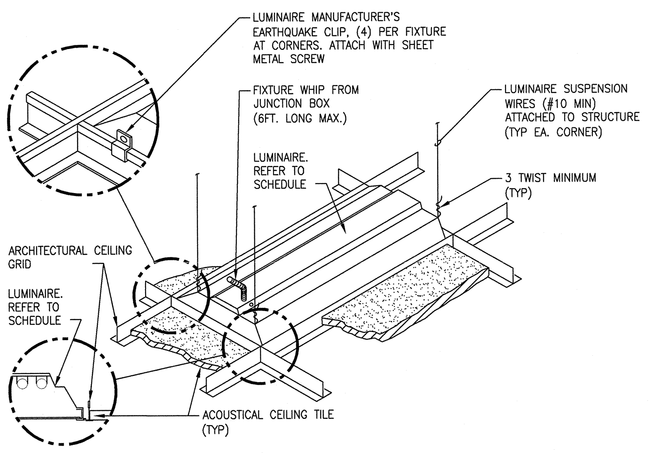

11 LUMINAIRE MOUNTING – LAY–IN CEILING
SCALE NONE

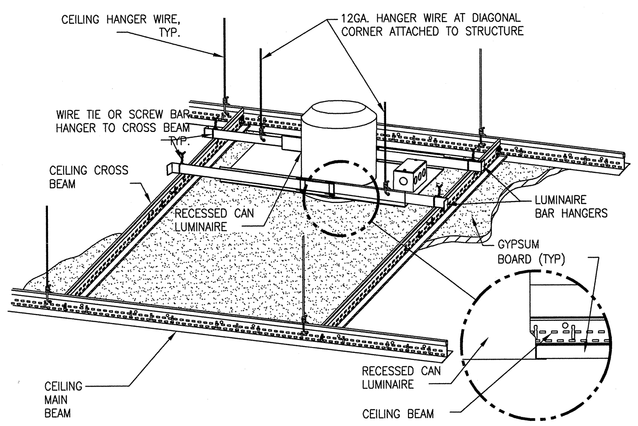

12 DOWNLIGHT MOUNTING – GYPBOARD HARD CEILING
SCALE NONE

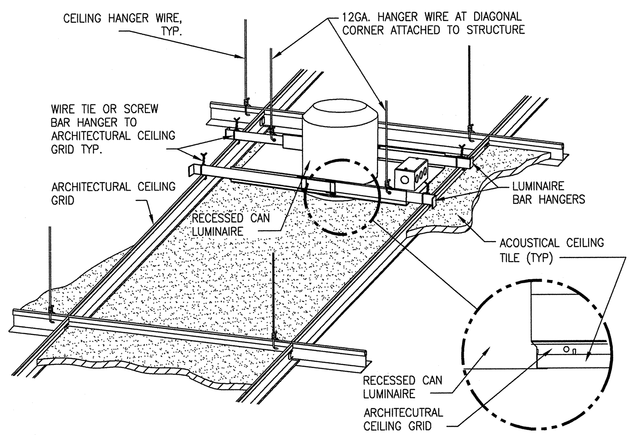

13 DOWNLIGHT MOUNTING – LAY–IN CEILING
SCALE NONE

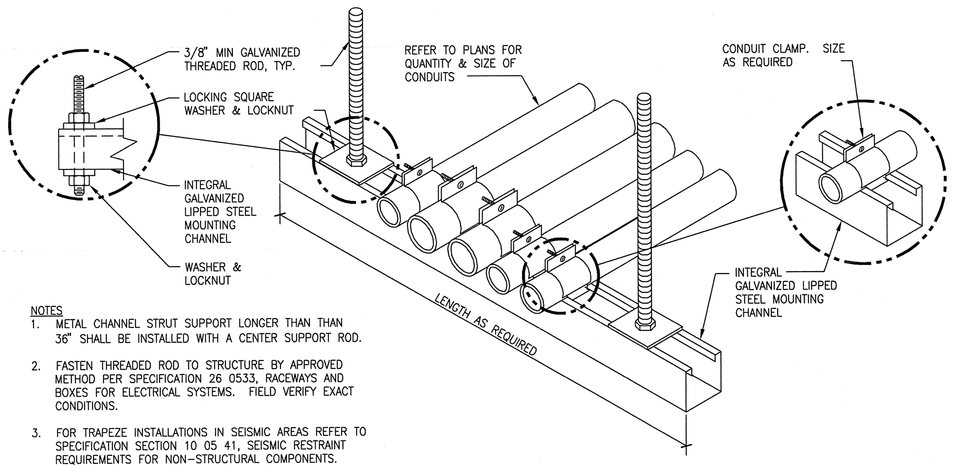

NOTES
1. METAL CHANNEL STRUT SUPPORT LONGER THAN THAN 36" SHALL BE INSTALLED WITH A CENTER SUPPORT ROD.
2. FASTEN THREADED ROD TO STRUCTURE BY APPROVED METHOD PER SPECIFICATION 26 0533, RACEWAYS AND BOXES FOR ELECTRICAL SYSTEMS. FIELD VERIFY EXACT CONDITIONS.
3. FOR TRAPEZE INSTALLATIONS IN SEISMIC AREAS REFER TO SPECIFICATION SECTION 10 05 41, SEISMIC RESTRAINT REQUIREMENTS FOR NON-STRUCTURAL COMPONENTS.

14 CONDUIT TRAPEZE MOUNTING DETAIL
SCALE NONE

REVISIONS	DATE

CSHQA
C.W. MOORE PLAZA
250 S. 5TH ST. BOISE, ID 83702
(208) 343-4635 FAX (208) 343-1858
http://www.cshqa.com

AMY K. DOCKTER, P.E.
C.W. MOORE PLAZA
250 S. 5TH ST
BOISE, IDAHO
PHONE: 208-343-4635 FAX: 208-343-1858

THESE DRAWINGS AND SPECIFICATIONS, AS INSTRUMENTS OF SERVICE, ARE AND SHALL REMAIN THE PROPERTY OF THE ARCHITECT / ENGINEER WHETHER THE PROJECT FOR WHICH THEY ARE MADE IS EXECUTED OR NOT. THESE DRAWINGS AND SPECIFICATIONS SHALL NOT BE USED BY ANY PERSON OR ENTITY ON OTHER PROJECTS, FOR ADDITIONS TO THIS PROJECT, OR COMPLETION OF THIS PROJECT WHEN PHASED WITHOUT THE WRITTEN CONSENT OF CSHQA OR ITS AFFILIATES. Copyright ©2011

STAMP: PROFESSIONAL ENGINEER REGISTERED 9201 12-1-11 STATE OF IDAHO AMY K. DOCKTER

CAD FILE NAME: 531–313_AE4.1.DWG
XREF FILE NAME: 531–319_xA_30X42TLBK.DWG

DRAWING TITLE: ELECTRICAL DETAILS
APPROVED: CHIEF OF FACILITY MANAGEMENT SERVICE
APPROVED: MEDICAL CENTER DIRECTOR

PROJECT TITLE: BOISE VAMC NEW EXTENDED CARE UNIT BUILDING 'A' CLC
BUILDING NUMBER: 121
CHECKED: AKD
DRAWN: CRP
LOCATION: VAMC BOISE, IDAHO

DATE: 12/01/2011
PROJECT NO. 531–319
DRAWING NO. AE4.1
DWG 54 OF 58

DEPARTMENT OF VETERANS AFFAIRS

Username: akirr
Date: 12/01/2011 – 4:53pm
Q:\2010\10101.0\Elec\02_Drawings\531–319_AE4.1.dwg

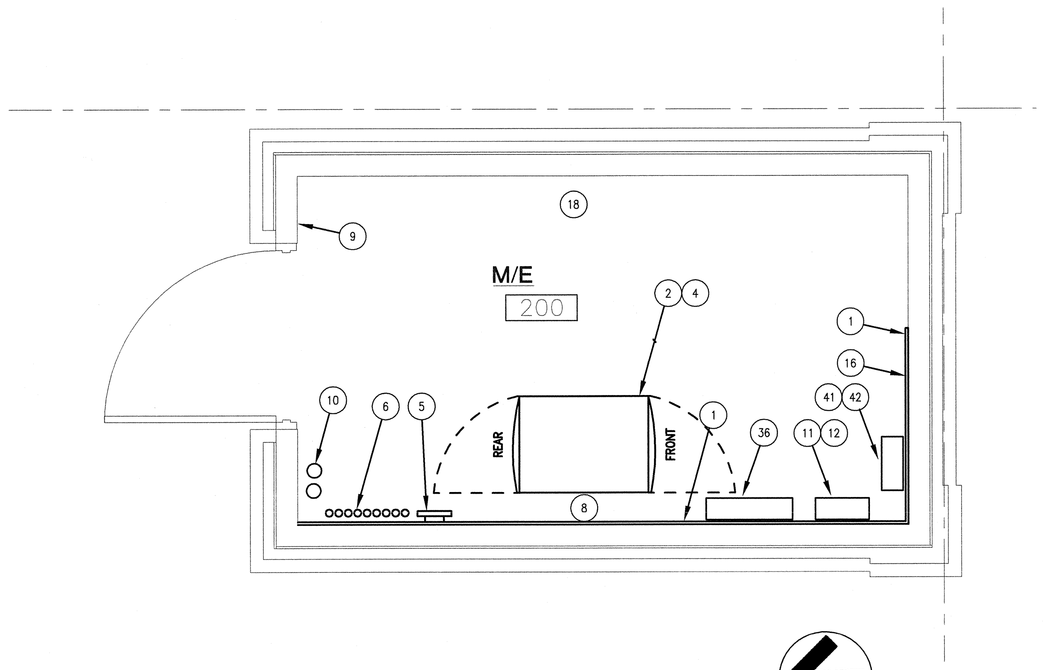

1 M/E 200 PLAN

0' 3" 6" 9" 12" 15" 18" SCALE: 1/2 "=1'-0"

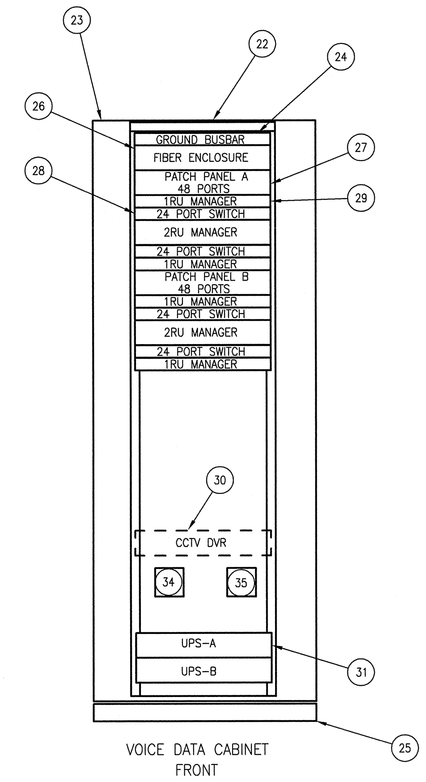

3 CABINET ELEVATION

0' 6" 1' 1'-6" 2' 2'-6" 3' SCALE: 1"=1'-0"

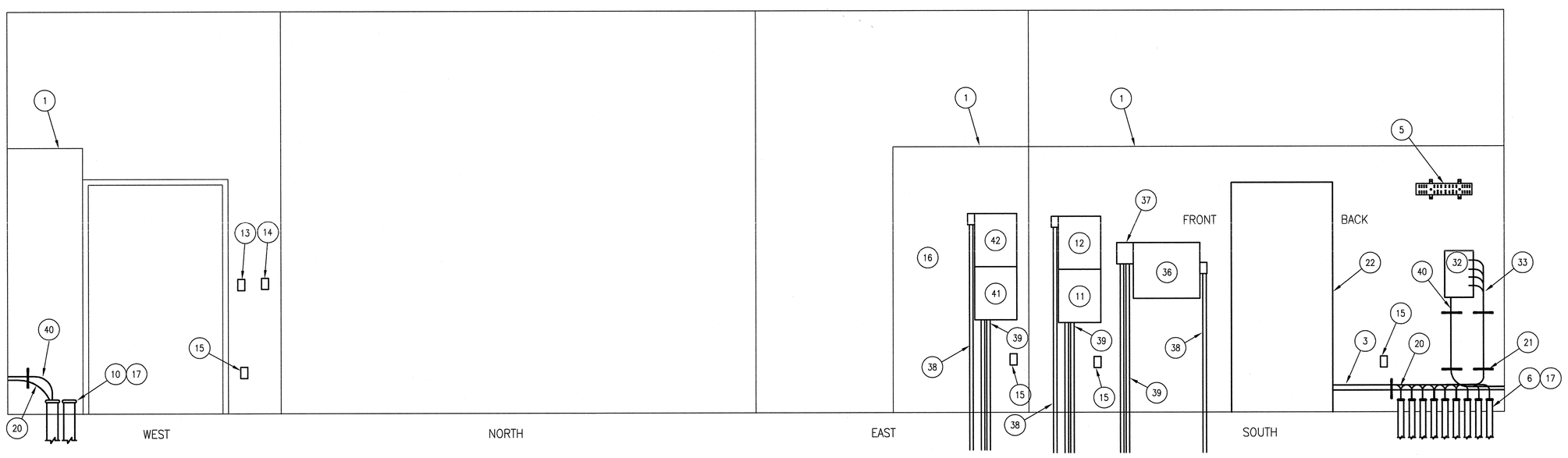

2 M/E 200 ELEVATIONS

0' 1' 2' 3' 4" 5" 6" SCALE: 1/2 "=1'-0"

GENERAL NOTES:

A. THIS IS THE ONLY TELECOMMUNICATIONS ROOM FOR INFORMATION TECHNOLOGY AND SECURITY.

B. FIRESTOP WALL PENETRATIONS AFTER INSTALLATION OF PATHWAY. FIRESTOP CONDUIT SLEEVES AFTER INSTALLATION OF CABLES.

C. COORDINATE WITH ARCHITECTURAL, MECHANICAL, ELECTRICAL, AND FIRE SAFETY WORK TO AVOID CONFLICTS. DO NOT BEGIN INSTALLATION OF TELECOMMUNICATIONS HARDWARE UNTIL DOOR IS INSTALLED AND SPACE IS PAINTED.

D. REFER TO SHEET AE3.2-1 AND -2 FOR BONDING AND GROUNDING REQUIREMENTS OF TMGB. REFER TO SHEET AE4.1-4 FOR BONDING AT SERVICE ENTRANCE BUSBAR.

SHEET NOTES:

1. PLYWOOD WALL FINISH AS SHOWN. COORDINATE WITH ARCHITECTURAL WALL TYPES. WALLS ARE TO BE PAINTED PRIOR TO MOUNTING HARDWARE ON PLYWOOD.
2. PROVIDE EQUIPMENT CABINET AND BOLT TO FLOOR. BOLT CABINET TO FLOOR WITH OPTIONAL L-BRACKET ON FRONT AND BACK SIDE OF CABINET.
3. HORIZONTAL CABLING TO DEVICES ON FLOOR BELOW.
4. ELECTRICAL SCOPE OF WORK TO PROVIDE TWO OUTLET BOXES INSIDE CABINET TO SUPPORT UPS UNITS.
5. PROVIDE 20"x4" SOLID COPPER TELECOMMUNICATIONS MAIN GROUNDING BUSBAR (TMGB) WITH INSULATED MOUNTS, PREDRILLED FOR 2-HOLE LUGS. TERMINATE BONDING CONDUCTORS WITH 2-HOLE LUGS AND FASTEN TO FRONT OF BUSBAR. INSTALL AT 72" A.F.F. RE: AE3.2-1 AND -2.
6. 8-2" CONDUITS SLEEVES FLOOR BELOW FOR LOW VOLTAGE CABLING.
7. ELECTRICAL CONNECTIONS INSIDE OF ACCESS CONTROL POWER SUPPLY CABINET.
8. INSTALL CABINET MINIMUM OF 6" FROM WALL TO PERMIT FULL DOOR SWING.
9. FLUSH MOUNTED LIGHT SWITCH AND WALL MOUNT TELEPHONE FACEPLATE.
10. 2-4" CONDUITS TO SIGNAL VAULT MH21. RE: AE2.5-1.
11. PROVIDE WALL-MOUNT BUILDING ACCESS CONTROL ENCLOSURE AND TERMINATE WIRING TO DOOR CONTROLLERS. PROVIDE PATCH CABLE AND TRANSCEIVERS FOR OPTICAL FIBER CONNECTION TO EXISTING CAMPUS CONTROL CENTER IN BUILDING 67. PROVIDE GROUND CONDUCTOR TO TMGB.
12. PROVIDE BUILDING ACCESS CONTROL WALL-MOUNT POWER SUPPLY WITH BATTERIES AND ELECTRICAL RECEPTACLE INSIDE ENCLOSURE.
13. LIGHT SWITCH.
14. WALL-MOUNT TELEPHONE FACEPLATE.
15. CONVENIENCE OUTLET.
16. SPACE RESERVED FOR MECHANICAL DDC PANEL.
17. BOND CONDUITS TO TMGB. FIRE STOP PENETRATIONS AND CONDUIT ENDS FOLLOWING CABLE INSTALLATION.
18. MECHANICAL SYSTEM COMPONENTS ON NORTH WALL. RE: AM2.3-2.
19. SUPPORT CABLES ON WALLS WITH D-RINGS AND VELCRO TYPE CABLE MANAGEMENT STRAPS.
20. OPTICAL FIBER CABLE FROM BUILDING B. RE: AE3.2-4. ROUTE TO CABINET AND TERMINATE IN RACK MOUNTED ENCLOSURE.
21. SUPPORT CABLES ON PLYWOOD WITH D-RINGS AND VELCRO TYPE CABLE MANAGEMENT STRAPS.
22. PROVIDE NEW NEMA TYPE-12 CABINET (GREAT LAKES GL840N12-2442 OR EQUAL) WITH FILTERED FAN KIT, CABLE MANAGEMENT AND BLACK IN COLOR.
23. PROVIDE CABLE MANAGEMENT FOR FRONT AND REAR ON LEFT AND RIGHT SIDES.
24. PROVIDE RACK MOUNT GROUNDING BUSBAR (CPI 10610-019 OR EQUAL).
25. INSTALL CABLING THROUGH GLAND PLATE ON BOTTOM OF CABINET.
26. PROVIDE CORNING PCH-01U AND 1 CONNECTOR PANEL WITH LC CONNECTORS FOR 50 MICRON MULTIMODE FIBER. TERMINATE 12 STRANDS FROM BUILDING B ON LC CONNECTORS. TEST AND LABEL THE INSTALLATION. IN BUILDING B, SPLICE 12 STRANDS OF NEW CABLE TO CAMPUS BACKBONE CABLE TO BUILDING 67. TEST CABLES FROM BUILDING A TO BUILDING 67. RE: AE3.2-4.
27. PROVIDE CAT-6 ANGLED PATCH PANEL FOR UTP CABLE TERMINATIONS. TERMINATE HORIZONTAL CABLES, TEST AND LABEL THE INSTALLATION. AE3.2-4
28. OWNER FURNISHED AND INSTALLED NETWORK SWITCHES.
29. PROVIDE HORIZONTAL CABLE MANAGERS (CPI 30330-719 AND 30339-719 OR EQUAL).
30. SPACE RESERVED FOR VIDEO SURVEILLANCE RECORDER.
31. PROVIDE TWO 3000VA UPS UNITS (APC SMARTUPS 3000VA WITH 30 AMP 208V INPUT) AND ENERGIZE FROM CIRCUITS INSIDE CABINET.
32. CATV DISTRIBUTION AMPLIFIER. TERMINATE FEEDER AND DROP CABLES.
33. COAXIAL CABLING FOR TELEVISION SERVICE DISTRIBUTION.
34. L6-30R, 208V RECEPTACLE FOR UPS A. COORDINATE WITH ELECTRICAL.
35. L6-30R, 208V RECEPTACLE FOR UPS B. COORDINATE WITH ELECTRICAL.
36. NURSE CALL SYSTEM CENTRAL EQUIPMENT CABINET. RE: AE3.2-6
37. PROVIDE WIREWAY FOR NURSE CALL CABLING FROM TOP OF ENCLOSURE.
38. COORDINATE ELECTRICAL POWER FOR HARDWIRE CONNECTION INSIDE CABINET.
39. DEDICATED CONDUITS FOR LIFE SAFETY AND SECURITY SYSTEMS.
40. BACKBONE COAXIAL CABLE FROM MH20. TERMINATE ON DISTRIBUTION AMPLIFIER. SWEEP TEST THE CABLE AND LABEL THE INSTALLATION. RE: AE3.2-3.
41. PROVIDE WALL-MOUNT RESIDENT'S ROOM ACCESS CONTROL ENCLOSURE AND TERMINATE WIRING TO DOOR CONTROLLERS. PROVIDE PATCH CABLE AND TRANSCEIVERS FOR OPTICAL FIBER CONNECTION TO EXISTING CAMPUS CONTROL CENTER IN BUILDING 67. PROVIDE GROUND CONDUCTOR TO TMGB.
42. PROVIDE RESIDENT'S ROOM ACCESS CONTROL WALL-MOUNT POWER SUPPLY WITH BATTERIES AND ELECTRICAL RECEPTACLE INSIDE ENCLOSURE.

Username: jromlein
Dec 01, 2011 - 2:01pm
Q:\2010\10101.0\CamEng\02_Drawings\531-319_AE4.2.dwg

REVISIONS	DATE

CSHQA

C.W. MOORE PLAZA
250 S. 5TH ST. BOISE, ID 83702
(208) 343-4635 FAX (208) 343-1858
http://www.cshqa.com

AMY K. DOCKTER, P.E.
C.W. MOORE PLAZA
250 S. 5TH ST
BOISE, IDAHO
PHONE: 208-343-4635 FAX: 208-343-1858

THESE DRAWINGS AND SPECIFICATIONS, AS INSTRUMENTS OF SERVICE, ARE AND SHALL REMAIN THE PROPERTY OF CSHQA. THE REPRODUCTION OF THESE DOCUMENTS FOR OTHER THAN THEY ARE SHOULD BE EXECUTED OR NOT, THESE DRAWINGS AND SPECIFICATIONS SHALL NOT BE USED BY ANY PERSON OR ENTITY ON OTHER PROJECTS, FOR ADDITIONS TO THIS PROJECT, OR COMPLETION OF THIS PROJECT WHEN PHASED WITHOUT THE WRITTEN CONSENT OF CSHQA OR ITS AFFILIATES. Copyright ©2011

STAMP

PROFESSIONAL ENGINEER REGISTERED 9201 12-1-11 STATE OF IDAHO AMY K. DOCKTER

CAD FILE NAME: 531-319_AE4.2.DWG

XREF FILE NAME: 531-319_xA_30X42TLBK.DWG 531-319_xA_Base1.DWG

DRAWING TITLE: TELECOMMUNICATION ROOM DETAILS

APPROVED: CHIEF OF FACILITY MANAGEMENT SERVICE

APPROVED: MEDICAL CENTER DIRECTOR

PROJECT TITLE: BOISE VAMC NEW EXTENDED CARE UNIT BUILDING 'A' CLC

BUILDING NUMBER: 121 | CHECKED: AKD | DRAWN: JDR

LOCATION: VAMC BOISE, IDAHO

DATE: 12/01/2011

PROJECT NO. 531-319

DRAWING NO. AE4.2

DWG 55 OF 58

DEPARTMENT OF VETERANS AFFAIRS

FIRE ALARM PLAN – SYMBOLS

FACP	FIRE ALARM CONTROL PANEL
F	MANUAL PULL STATION
S	SMOKE DETECTOR
D	DUCT SMOKE DETECTOR
TS	TAMPER SWITCH
FS	FLOW SWITCH
15cd F	SPEAKER STROBE
15cd F	STROBE ONLY

REFERENCES

X	KEYED NOTE
1	REVISION DELTA

GENERAL NOTES

A. ALL CONTRACT DOCUMENTS ARE PART OF THE FIRE ALARM WORK INSOFAR AS THEY APPLY, AS IF REFERRED TO IN FULL. SEE CONTRACT DOCUMENTS OF ALL OTHER DISCIPLINES FOR WORK TO BE PERFORMED BY THE ELECTRICAL CONTRACTOR.

B. DO NOT SCALE FIRE PROTECTION DRAWINGS. DRAWINGS ARE MADE ON A SMALL SCALE, DEVICES AND EQUIPMENT ARE SHOWN IN THEIR APPROXIMATE LOCATION, UNLESS SPECIFICALLY DIMENSIONED. VERIFY ALL DIMENSIONS ON THE PROJECT. REFER TO CONTRACT DOCUMENTS OF ALL OTHER DISCIPLINES FOR DIMENSIONS.

C. MATERIALS, DIMENSIONS, WALL THICKNESS, ROUGH OPENINGS, PATTERNS, AND THE LIKE SHALL BE FIELD VERIFIED BY THE CONTRACTOR. ANY DISCREPANCIES SHALL BE BROUGHT TO THE ATTENTION OF THE ARCHITECT AND ENGINEER PRIOR TO COMMENCING WITH THE WORK.

D. PRIOR TO ROUGH–IN OF ANY FIRE PROTECTION EQUIPMENT THE CONTRACTOR SHALL COORDINATE WITH ALL CONSTRUCTION DOCUMENTS AND ALL OTHER TRADES TO PREVENT ANY INTERFERENCES. PREPARE COORDINATION DRAWINGS AS REQUIRED IN CONJUNCTION WITH OTHER TRADES TO PREVENT INTERFERENCES. ANY MODIFICATIONS TO WORK INSTALLED DUE TO LACK OF COORDINATION SHALL BE FULLY BORNE BY THE CONTRACTOR.

E. CONTRACTOR SHALL MAINTAIN A COMPLETE SET OF AS–BUILT DRAWINGS. AS–BUILT SET OF DRAWINGS SHALL BE UPDATED DAILY AND SHALL DOCUMENT THE ACTUAL INSTALLED CONDITION OF THE ENTIRE FIRE ALARM NSTALLATION. AS–BUILT SET OF DRAWINGS SHALL BE AVAILABLE AT ALL TIMES ON THE SITE FOR INSPECTION BY CODE OFFICIALS, OWNER, ARCHITECT, AND ENGINEER.

F. OBTAIN ALL PERMITS, COORDINATE, FURNISH, INSTALL, CONNECT AND TEST ALL FIRE ALARM EQUIPMENT REQUIRED FOR ALL THE SYSTEMS INSTALLED UNDER THIS CONTRACT TO INSURE COMPLETE AND FULLY OPERATIONAL SYSTEMS.

G. INSTALL ALL EQUIPMENT PER MANUFACTURER'S RECOMMENDATIONS.

H. ALL FIRE ALARM PROGRAMMING MUST BE ACCOMPLISHED BY THE CURRENT VA BOISE FIRE ALARM MAINTENANCE CONTRACTOR. THE CURRENT BOISE FIRE ALARM MAINTENANCE CONTRACTOR IS FIRE SENTRY SYSTEMS, Inc. 208–887–4774

I. ALL FIRE ALARM CONDUCTOR SHALL BE ROUTED IN CONDUIT. CONDUIT SIZE SHALL BE 3/4" MINIMUM. FIRE ALARM SYSTEM CONDUIT SHALL BE RED IN COLOR.

J. UPON ACTIVATION OF SMOKE DETECTOR IN THE ELEVATOR MACHINE ROOM, ELEVATOR SHALL NOT BE RECALLED TO THE FLOOR ON WHICH THE ELEVATOR MACHINE ROOM IS LOCATED.

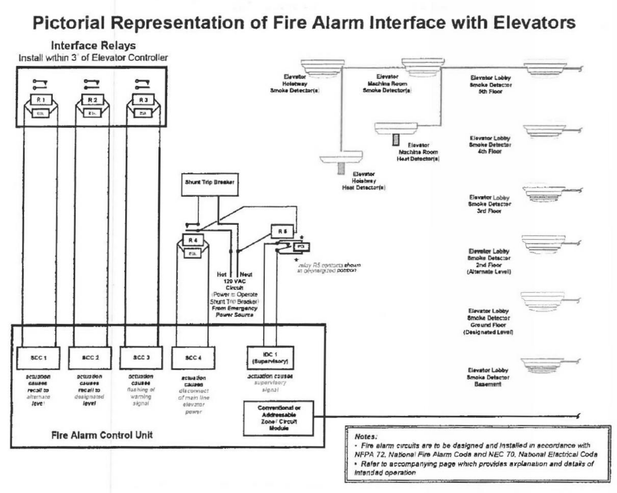

FIRE PROTECTION DRAWING INDEX

AFP0.1	FIRE PROTECTION LEGEND AND SYMBOLS
AFP2.1	FIRE ALARM PLAN
AFP3.1	FIRE ALARM RISER DIAGRAM AND DETAILS

REVISIONS | DATE

CSHQA
C.W. MOORE PLAZA
250 S. 5TH ST. BOISE, ID 83702
(208) 343-4635 FAX (208) 343-1858
http://www.cshqa.com

AMY K. DOCKTER, P.E.
C.W. MOORE PLAZA
250 S. 5TH ST
BOISE, IDAHO
PHONE: 208-343-4635 FAX: 208-343-1858

THESE DRAWINGS AND SPECIFICATIONS, AS INSTRUMENTS OF SERVICE, ARE AND SHALL REMAIN THE PROPERTY OF THE ARCHITECT / ENGINEER WHETHER THE PROJECT FOR WHICH THEY ARE MADE IS EXECUTED OR NOT. THESE DRAWINGS AND SPECIFICATIONS SHALL NOT BE USED BY ANY PERSON OR ENTITY ON OTHER PROJECTS, FOR ADDITIONS TO THIS PROJECT, OR COMPLETION OF THIS PROJECT WHEN PHASED WITHOUT THE WRITTEN CONSENT OF CSHQA OR ITS AFFILIATES. Copyright ©2011

STAMP

PROFESSIONAL ENGINEER
REGISTERED
9201
5-23-12
STATE OF IDAHO
AMY K. DOCKTER

CAD FILE NAME: 531–319_AFP0.1.DWG

XREF FILE NAME: 531–319_xA_30X42TLBK.DWG

DRAWING TITLE: FIRE PROTECTION LEGEND AND SYMBOLS

APPROVED: CHIEF OF FACILITY MANAGEMENT SERVICE

APPROVED: MEDICAL CENTER DIRECTOR

PROJECT TITLE: BOISE VAMC NEW EXTENDED CARE UNIT BUILDING 'A' CLC

BUILDING NUMBER: 121

CHECKED: AKD

DRAWN: CRP

LOCATION: VAMC BOISE, IDAHO

DATE: 12/01/2011

PROJECT NO.: 531–319

DRAWING NO.: AFP0.1

DWG 56 OF 58

DEPARTMENT OF VETERANS AFFAIRS

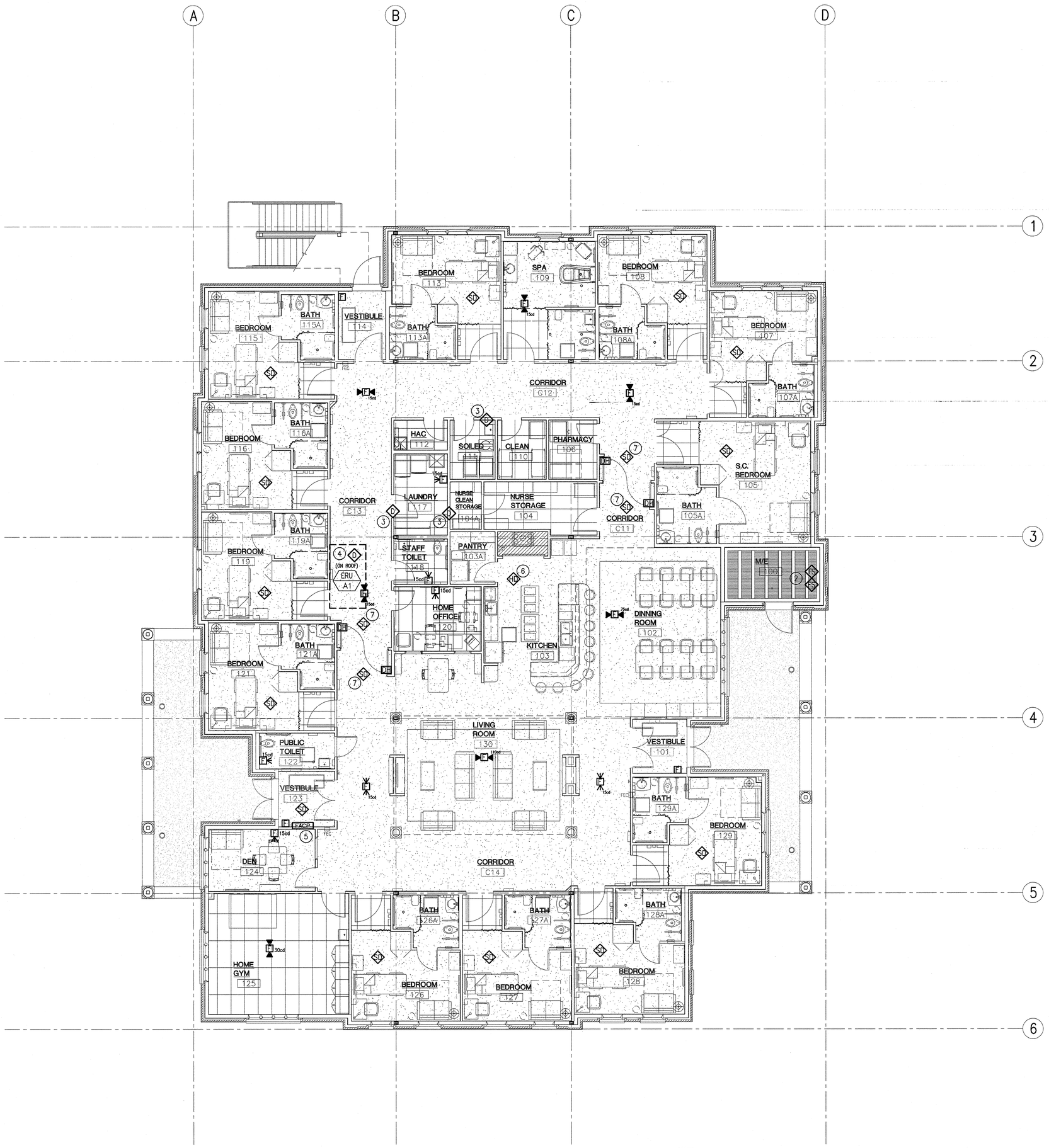

1 FIRE ALARM PLAN

0' 4' 8' 12' 16' 20' 24'

SCALE: 1/8" = 1'-0"

PROJECT NORTH

GENERAL NOTES:

A. THIS IS A MULTI-OCCUPANCY CLASSIFICATION WITH AN OCCUPANT LOAD OF LESS THAN 500 OR MORE THAN 100 PERSONS ABOVE OR BELOW THE LOWEST LEVEL OF EXIT DISCHARGE. A FULL VISUAL NOTIFICATION SYSTEM IS NOT REQUIRED.

B. MANUAL PULL STATIONS SHALL BE INSTALLED PER NFPA 72.

C. FIRE ALARM SYSTEM SHALL HAVE SPARE CAPACITY FOR ADDITIONS AND/OR MODIFICATION TO NOTIFICATION APPLIANCE CIRCUITS AND INITIATING CIRCUITS.

D. NOTIFICATION APPLIANCES (AUDIBLE AND VISUAL) SHALL BE SYNCHRONIZED PER NFPA 72 REQUIREMENTS.

E. SEPARATE 120V POWER CIRCUITS ARE TO BE USED FOR DUCT SMOKE DETECTORS (IN-DUCT OR SAMPLING TUBE TYPE). DO NOT CONNECT TO THE 120V POWER CIRCUIT FOR THE CIRCUITS FOR DAMPERS & DOOR HOLDERS, OR THE CIRCUITS FOR POWER EXTENDER PANELS.

F. SHOP DRAWINGS SHALL BE APPROVED BY THE AUTHORITY HAVING JURISDICTION (AHJ) PRIOR TO THE INSTALLATION OF ANY CONDUIT OR COMPONENT. A SET OF APPROVED PLANS SHALL BE MAINTAINED AT THE JOB SITE AT ALL TIMES.

G. ALL FIRE ALARM CABLE IS TO BE ATTACHED/SUPPORTED TO STRUCTURE INDEPENDENTLY AND NOT ATTACHED TO OTHER HANGERS OR EQUIPMENT, OR IS TO BE INSTALLED IN CONDUIT.

H. FIRE ALARM SYSTEM BOXES AND CONDUIT IN AREAS NOT WITHIN PUBLIC VIEW SHALL BE PAINTED RED OR OTHERWISE MARKED AS REQUIRED BY NFPA 72. ALL FIRE ALARM EQUIPMENT IN PUBLIC VIEW IS TO BE PROVIDED WITH THE MANUFACTURER APPLIED CUSTOM COLOR DESIGNATED BY THE ARCHITECT.

I. COORDINATE WITH MECHANICAL CONTRACTOR REGARDING DUCT DETECTORS. IF DUCT DETECTORS ARE REQUIRED, THEY SHALL HAVE AN ACCESS/MAINTENANCE HATCH PER NFPA 72. ENSURE CONNECTIONS TO THE EXISTING FIRE ALARM CONTROL PANEL MEET NFPA 72 REQUIREMENTS. DUCT DETECTORS TO BE POWERED BY OTHERS (NOT FROM THE FACP).

J. FIRE ALARM SYSTEM SHALL HAVE EXPANSION SPACE FOR DETECTORS AND NOTIFICATION APPLIANCES. NAC PANELS MAY BE REQUIRED (NAC), CONTRACTOR SHALL INDICATE THE LOCATION ON THE SHOP DRAWINGS. FURNISH AND INSTALL A SMOKE DETECTOR TO COMPLY WITH CODE REQUIREMENTS.

K. CONTRACTOR SHALL COORDINATE WITH CAMPUS SYSTEM DURING THE DESIGN PHASE AND PROVIDE A FIRE ALARM SYSTEM THAT IS PEER TO PEER AND NETWORKABLE WITH THE CAMPUS ESTABLISHED SYSTEM.

L. FIRE ALARM CONTROL PANEL AND ASSOCIATED EQUIPMENT THAT REQUIRES 120V SHALL BE ON A DEDICATED BRANCH CIRCUIT, BE A LOCK-ON TYPE BREAKER THAT IS PAINTED RED AND BE ON THE GENERATOR BACK UP SYSTEM.

SHEET NOTES:

1. SMOKE DETECTOR LOCATED IN LOBBY FOR ELEVATOR RECALL.
2. CONTRACTOR TO COORDINATE WITH FIRE SPRINKLER CONTRACTOR TO VERIFY QUANTITY AND LOCATION OF FIRE SPRINKLER RISER. FURNISH AND INSTALL TAMPER AND FLOW SWITCHES AS REQUIRED.
3. FURNISH AND INSTALL AN IN DUCT OR SAMPLE TUBE TYPE SMOKE DETECTOR FOR DUCT DAMPER CLOSURE AS REQUIRED BY CODE.
4. FURNISH AND INSTALL AN IN DUCT OR SAMPLE TUBE TYPE SMOKE DETECTOR FOR HVAC SHUTDOWN AS REQUIRED BY CODE.
5. FIRE ALARM CONTROL PANEL. FOR POWER CONNECTION REFER TO DRAWING AE2.1.
6. COORDINATE WITH FIRE DOOR MANUFACTURER FOR FUSIBLE LINK TEMPERATURE. FURNISH AND INSTALL HEAT DETECTOR NEAR DOOR TO ALARM PRIOR TO RELEASE OF FIRE DOOR.
7. FURNISH AND INSTALL SMOKE DETECTOR NEAR DOOR TO RELEASE FIRE/SMOKE DOOR HOLD-OPEN.

THESE ENGINEERED DRAWINGS ARE TO DEFINE THE DESIGN CONCEPT FOR WORKING PLAN PREPARATION BY OTHERS. FIRE ALARM CONTRACTOR SHALL PROVIDE A COMPLETE SET OF SHOP DRAWINGS FOR TENANT IMPROVEMENTS INCLUDING BUT NOT LIMITED TO APPLIANCE/DEVICE LAYOUT, WIRING, EQUIPMENT ADDRESSES, WIRING DIAGRAMS, BATTERY CALCULATIONS, I/O MATRIX, ONE LINE DIAGRAM, SUBMITTALS, EXISTING SYSTEM TIE IN DIAGRAMS AND EQUIPMENT COMPATIBILITY DOCUMENTATION. CONTRACTOR IS RESPONSIBLE TO OBTAIN A SEALED LETTER OF ACCEPTANCE, FROM THE ENGINEER, CERTIFYING THE SHOP DRAWINGS ARE IN ACCORDANCE WITH THE DESIGN CONCEPT. REVIEW LETTER SHALL BE SUBMITTED WITH WORKING PLANS TO APPROPRIATE JURISDICTIONAL AUTHORITIES AND INTERESTED PARTIES.

Username: dpirc
Dec 01, 2011 - 5:15pm
Q:\20100\1010\0.0\Dwg\02_Drawings\531-319_AFP2.1.dwg

REVISIONS | DATE

CSHQA

C.W. MOORE PLAZA
250 S. 5TH ST. BOISE, ID 83702
(208) 343-4635 FAX (208) 343-1858
http://www.cshqa.com

AMY K. DOCKTER, P.E.
C.W. MOORE PLAZA
250 S. 5TH ST
BOISE, IDAHO
PHONE: 208-343-4635 FAX: 208-343-1858

THESE DRAWINGS AND SPECIFICATIONS, AS INSTRUMENTS OF SERVICE, ARE AND SHALL REMAIN THE PROPERTY OF THE ARCHITECT / ENGINEER WHETHER THE PROJECT FOR WHICH THEY ARE MADE IS EXECUTED OR NOT. THESE DRAWINGS AND SPECIFICATIONS SHALL NOT BE USED BY ANY PERSON OR ENTITY ON OTHER PROJECTS, FOR ADDITIONS TO THIS PROJECT, OR COMPLETION OF THIS PROJECT-WHEN PHASED-WITHOUT THE WRITTEN CONSENT OF CSHQA OR ITS AFFILIATES. Copyright©2011

STAMP

PROFESSIONAL ENGINEER REGISTERED 0201 STATE OF IDAHO AMY K. DOCKTER

CAD FILE NAME: 531-319_AFP21.DWG

XREF FILE NAME: 531-319_xA_30X42TLBK.DWG 531-319_xA_Base1.DWG

DRAWING TITLE: FIRE ALARM PLAN

APPROVED: CHIEF OF FACILITY MANAGEMENT SERVICE

APPROVED: MEDICAL CENTER DIRECTOR

PROJECT TITLE: BOISE VAMC NEW EXTENDED CARE UNIT BUILDING 'A' CLC

BUILDING NUMBER: 121 | CHECKED: AKD | DRAWN: CRP

LOCATION: VAMC BOISE, IDAHO

DATE: 12/01/2011

PROJECT NO.: 531-319

DRAWING NO.: AFP2.1

DWG 57 OF 58

DEPARTMENT OF VETERANS AFFAIRS

NOTE: THIS IS A TYPICAL RISER LAYOUT AND IS SCHEMATIC IN NATURE. NOT ALL DEVICES ARE SHOWN. FIRE ALARM CONTRACTOR TO ENSURE ALL NEW DEVICES ARE INCLUDED ON THE RISER. PROVIDE COMPLETE RISER LAYOUT ON SHOP DRAWINGS.

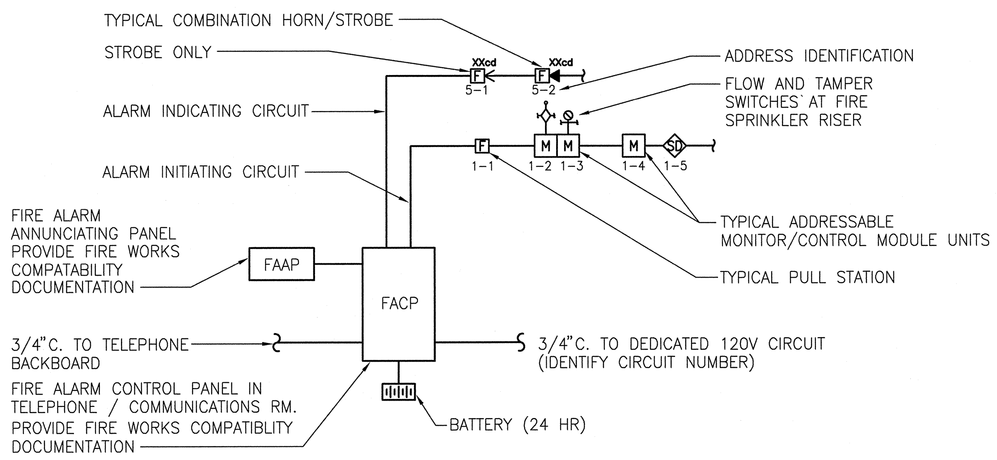

FIRE ALARM RISER DIAGRAM NOTES:

1. REFER TO FLOOR PLAN FOR LOCATION AND QUANTITY OF DEVICES.
2. UNDER THE ACTIVATION OF SPRINKLER FLOW, SMOKE DETECTOR AND/OR ANY HVAC UNIT DUCT SMOKE DETECTOR THE CONTROL PANEL SHALL SHUT-OFF HVAC UNITS.

1 TYPICAL FIRE ALARM RISER
SCALE NONE

NOTE: THIS IS A TYPICAL EQUIPMENT SCHEDULE AND IS SCHEMATIC IN NATURE. NOT ALL EQUIPMENT IS SHOWN. FIRE ALARM CONTRACTOR TO ENSURE ALL EQUIPMENT IS INCLUDED. PROVIDE COMPETE EQUIPMENT SCHEDULE ON SHOP DRAWINGS

EQUIPMENT LIST - (PROJECT NAME)

QUANTITY	DESCRIPTION	MANUFACTURER	MODEL NO.	STANDBY CURRENT MA	ALARM CURRENT MA
(MANUFACTURER NAME AND REPRESENTATIVE CONTACT INFORMATION)					
BUIDLING FIRE ALARM SYSTEM					
XX	FIRE ALARM CONTROL PANEL W/ DACT	(MANUFACTURER NAME)	(MODEL NO.)	XXX	XXX
XX	– BATTERY CHARGER	(MANUFACTURER NAME)	(MODEL NO.)	N/A	N/A
XX	– EXTERNAL BATTERY CABINET	(MANUFACTURER NAME)	(MODEL NO.)	N/A	N/A
XX	– BATTERY (55AH)	(MANUFACTURER NAME)	(MODEL NO.)	N/A	N/A
XX	– NETWORK INTERFACE MODULE, COPPER WIRE	(MANUFACTURER NAME)	(MODEL NO.)	XXX	XXX
XX	INTELLIGENT NETWORK COMMAND CENTER	(MANUFACTURER NAME)	(MODEL NO.)	N/A	N/A
XX	– COMMAND CENTER VOICE GATEWAY	(MANUFACTURER NAME)	(MODEL NO.)	XXX	XXX
XX	– ADDRESSABLE SWITCH MODULE	(MANUFACTURER NAME)	(MODEL NO.)	XX	XXX
XX	– FIRE FIGHTER TELEPHONE HANDSET	(MANUFACTURER NAME)	(MODEL NO.)	N/A	N/A
XX	– PAGING MICROPHONE MODULE	(MANUFACTURER NAME)	(MODEL NO.)	N/A	N/A
XX	– INNER DOOR W/ ONE DOUBLE SLOT FOR INCC-TEL	(MANUFACTURER NAME)	(MODEL NO.)	N/A	N/A
XX	INTELLIGENT NETWORK TRANSPONDER	(MANUFACTURER NAME)	(MODEL NO.)	N/A	N/A
XX	– INTELLIGENT NETWORK INTERFACE-VOICE GATEWAY	(MANUFACTURER NAME)	(MODEL NO.)	XXX	XXX
XX	– ADDRESSABLE SWITCH MODULE – DUAL CHANNEL	(MANUFACTURER NAME)	(MODEL NO.)	XX	XX
XX	– POWER SUPPLY	(MANUFACTURER NAME)	(MODEL NO.)	XXX	XX
XX	– AMPLIFIER	(MANUFACTURER NAME)	(MODEL NO.)	XXX	XXXX
XX	– BATTERY (31AH)	(MANUFACTURER NAME)	(MODEL NO.)	N/A	N/A
XX	– EXTERNAL BATTERY CABINET	(MANUFACTURER NAME)	(MODEL NO.)	N/A	N/A
NEW ADDRESSABLE FIRE ALARM INITIATING DEVICES					
XX	ADDR. SMOKE DETECTOR – PHOTOELECTRIC	(MANUFACTURER NAME)	(MODEL NO.)	XXX	XXXX
XX	– SMOKE DETECTOR BASE (STANDARD)	(MANUFACTURER NAME)	(MODEL NO.)	N/A	N/A
XX	ADDRESSABLE RELAY MODULE	(MANUFACTURER NAME)	(MODEL NO.)	XXX	XXX
XX	ADDRESSABLE INPUT MODULE	(MANUFACTURER NAME)	(MODEL NO.)	XXX	XXX
ACCESSORIES:					
XX	SLC WIRE – 2C#18	(MANUFACTURER NAME)	(MODEL NO.)	N/A	N/A
XX	NETWORK WIRE – 4C#18	(MANUFACTURER NAME)	(MODEL NO.)	N/A	N/A
XX	NAC CIRCUIT WIRE – 2C#12	(MANUFACTURER NAME)	(MODEL NO.)	N/A	N/A
XX	NAC CIRCUIT WIRE – 2C#14	(MANUFACTURER NAME)	(MODEL NO.)	N/A	N/A
NOTIFICATION APPLIANCES:					
XX	ADA SPEAKER/STROBE-15CD, WALL MOUNT	(MANUFACTURER NAME)	(MODEL NO.)		XX
XX	ADA STROBE ONLY-15CD,WALL MOUNT	(MANUFACTURER NAME)	(MODEL NO.)		XX
XX	ADA SPEAKER/STROBE -15CD, CEILING MOUNT	(MANUFACTURER NAME)	(MODEL NO.)		XX
XX	ADA SPEAKER/STROBE-30CD, WALL MOUNT	(MANUFACTURER NAME)	(MODEL NO.)		XX
XX	ADA STROBE ONLY – 30CD, WALL MOUNT	(MANUFACTURER NAME)	(MODEL NO.)		XX
XX	ADA SPEAKER/STROBE-30CD, CEILING MOUNT	(MANUFACTURER NAME)	(MODEL NO.)		XXX
XX	ADA SPEAKER/STROBE-75CD, WALL MOUNT	(MANUFACTURER NAME)	(MODEL NO.)		XXX
XX	ADA STROBE ONLY – 75CD, WALL MOUNT	(MANUFACTURER NAME)	(MODEL NO.)		XXX
XX	ADA SPEAKER/STROBE-75CD, CEILING MOUNT	(MANUFACTURER NAME)	(MODEL NO.)		XXX
XX	ADA SPEAKER/STROBE-110CD, WALL MOUNT	(MANUFACTURER NAME)	(MODEL NO.)		XXX
XX	ADA SPEAKER/STROBE-95CD, CEILING MOUNT	(MANUFACTURER NAME)	(MODEL NO.)		XXX
XXXX	TOTAL NOTIFICATION APPLIANCES				XXXXX

2 EQUIPMENT LIST FOR FIRE ALARM EQUPMENT
SCALE NONE

NOTE: THIS IS A TYPICAL I/O MATRIX AND IS SCHEMATIC IN NATURE. NOT ALL INPUTS OR OUTPUTS ARE SHOWN. FIRE ALARM CONTRACTOR TO ENSURE ALL I/O ARE INCLUDED. PROVIDE COMPLETE I/O MATRIX ON SHOP DRAWINGS

SYSTEM OUTPUTS

SYSTEM INPUTS	ACTUATE ALL SPEAKERS & STROBES	DELAYED EGRESS UNLOCKING SEQUENCE	HVAC SHUTDOWN FOR SMOKE CONTROL	ELEVATOR RECALL	ELEVATOR POWER SHUNT TRIP	TRANSMIT FIRE ALARM SIGNAL TO SUPERVISING STATION	TRANSMIT SUPERVISORY SIGNAL TO MONITORING SERVICE	TRANSMIT TROUBLE SIGNAL TO MONITORING SERVICE	ACTUATE EXTERIOR BELL TO INDICATE WATERFLOW	RELEASE MAGNETICALLY HELD DOORS	CLOSE SMOKE/FIRE DAMPERS IN RATED WALLS	DISPLAY/PRINT CHANGE OF STATUS & ADDRESS LOCATION	ACTUATE COMMON AUDIBLE ALARM SIGNAL AT FACP & ANNUNCIATORS	ACTUATE COMMON AUDIBLE SUPERVISORY SIGNAL AT FACP AND ANNUNCIATORS	ACTUATE COMMON AUDIBLE TROUBLE SIGNAL AT FACP AND ANNUNCIATORS
FIRE ALARM AC POWER FAILURE-FACP & ALL POWER PANELS								X				X			X
FIRE ALARM SYSTEM LOW BATTERY-FACP & ALL POWER PANELS								X				X			X
OPEN CIRCUIT-FACP & ALL POWER PANELS								X				X			X
GROUND FAULT-FACP & ALL POWER PANELS								X				X			X
NOTIFICATION APPLIANCE SHORT CIRCUIT-FACP & ALL POWER PANELS								X				X			X
MANUAL PULL STATION	X	X				X				X	X	X	X		
SMOKE DETECTORS – ELEVATOR MACHINE ROOM	X	X		X		X				X		X	X		
SMOKE DETECTORS – ELEVATOR LOBBIES	X	X		X		X				X		X	X		
HEAT DETECTORS – ELEVATOR MACHINE ROOM	X	X			X	X				X		X	X		
SMOKE DETECTORS – ABOVE FACP & POWER PANELS AND FOR EGRESS	X	X				X				X		X	X		
WET SYSTEM FLOW SWITCH	X	X				X			X	X	X	X	X		
TAMPER SWITCHES ON SPRINKLER CONTROL VALVES							X					X		X	
TAMPER SWITCH ON KNOX BOX							X					X		X	
DUCT SMOKE DETECTORS – SAMPLING TUBE FOR HVAC SMOKE CONTROL INPUT			X				X					X		X	

3 I/O MATRIX
SCALE NONE

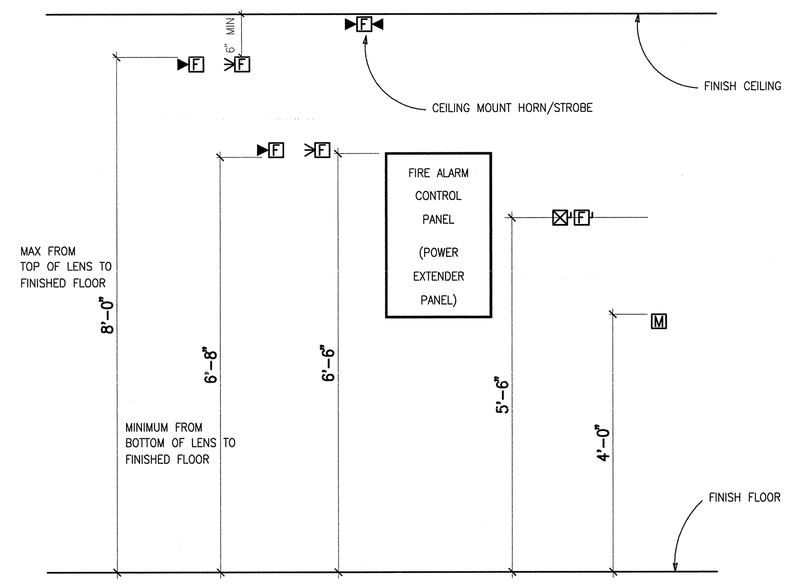

NOTE:
1. VERIFY ALL MOUNTING HEIGHTS WITH UFAS REQUIREMENTS AND OTHER APPLICABLE CODES.
2. COORDINATE MOUNTING HEIGHTS WITH ALL ARCHITECTURAL ELEVATIONS, FLOOR PLANS AND DETAILS PRIOR TO ROUGH-IN. INFORM ARCHITECT OF ANY CONFLICTS.

4 MOUNTING HEIGHT DETAIL
SCALE NONE

Username: djpirc
Dec 01, 2011 – 5:16pm
Q:\2010\10101.01\Elec\02_Drawings\531-319_AFP3.1.dwg

REVISIONS | DATE

CSHQA
C.W. MOORE PLAZA
250 S. 5TH ST. BOISE, ID 83702
(208) 343-4635 FAX (208) 343-1858
http://www.cshqa.com

AMY K. DOCKTER, P.E.
C.W. MOORE PLAZA
250 S. 5TH ST
BOISE, IDAHO
PHONE: 208-343-4635 FAX: 208-343-1858

THESE DRAWINGS AND SPECIFICATIONS, AS INSTRUMENTS OF SERVICE, ARE AND SHALL REMAIN THE PROPERTY OF THE ARCHITECT / ENGINEER WHETHER THE PROJECT FOR WHICH THEY ARE MADE IS EXECUTED OR NOT. THESE DRAWINGS AND SPECIFICATIONS SHALL NOT BE USED BY ANY PERSON OR ENTITY ON OTHER PROJECTS, FOR ADDITIONS TO THIS PROJECT, OR COMPLETION OF THIS PROJECT WHEN PHASED WITHOUT THE WRITTEN CONSENT OF CSHQA OR ITS AFFILIATES. Copyright©2011

STAMP
PROFESSIONAL ENGINEER REGISTERED 9201 12-1-11 STATE OF IDAHO AMY K. DOCKTER

CAD FILE NAME: 531-319_AFP31.DWG
XREF FILE NAME: 531-319_xA_30X42TLBK.DWG

DRAWING TITLE: FIRE ALARM RISER DIAGRAM AND DETAILS

APPROVED: CHIEF OF FACILITY MANAGEMENT SERVICE
APPROVED: MEDICAL CENTER DIRECTOR

PROJECT TITLE: BOISE VAMC NEW EXTENDED CARE UNIT BUILDING 'A' CLC

BUILDING NUMBER: 121 | CHECKED: AKD | DRAWN: DJP
LOCATION: VAMC BOISE, IDAHO

DATE: 12/01/2011
PROJECT NO. 531-319
DRAWING NO. AFP3.1
DWG 58 OF 58

DEPARTMENT OF VETERANS AFFAIRS