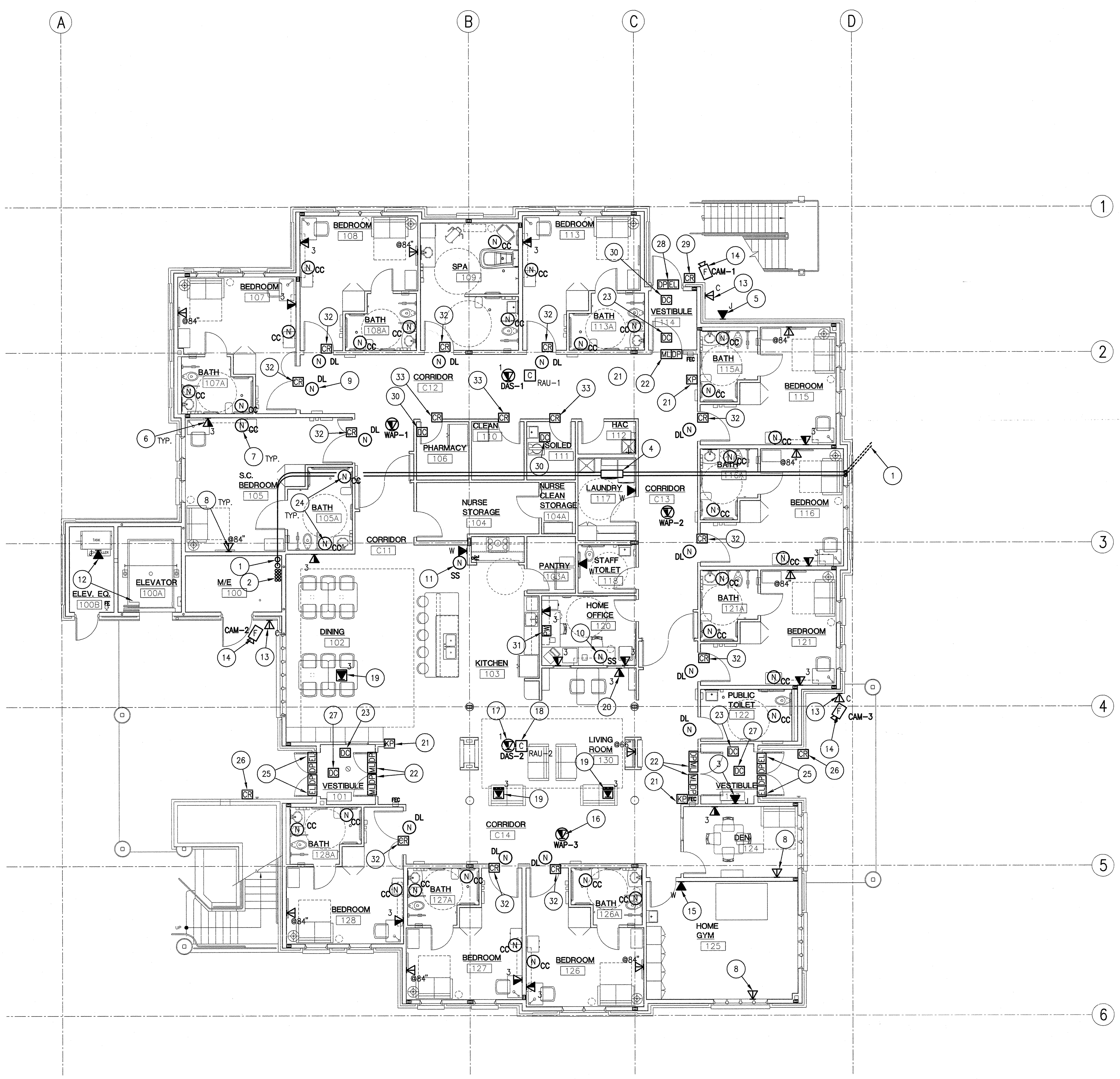

1 FIRST FLOOR TELECOMMUNICATION PLAN

SCALE: 1/8" = 1'-0"

PROJECT NORTH

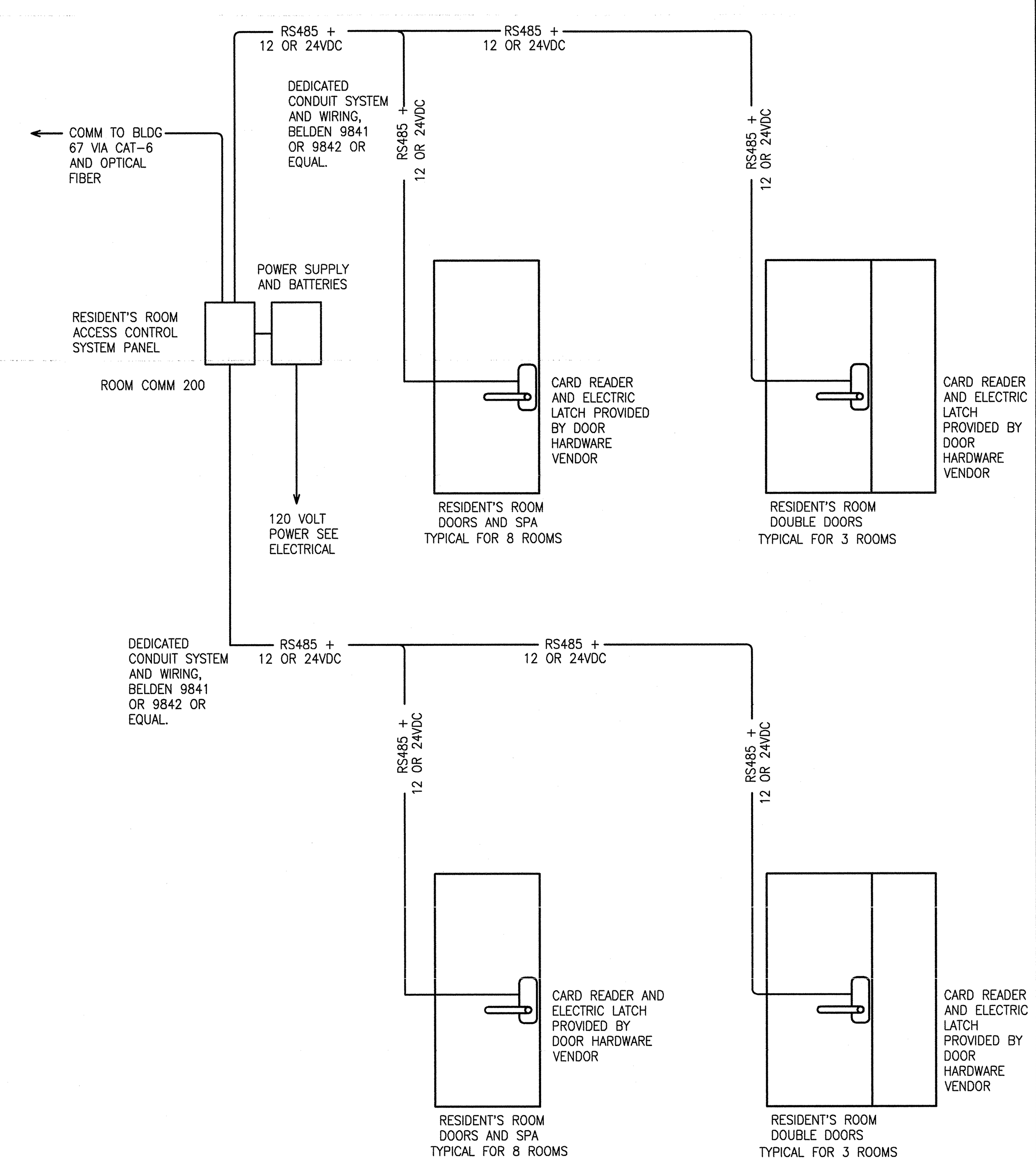

2 RESIDENT'S ROOM ACCESS

SCALE: NONE

GENERAL NOTES:

A. INSTALL ALL PRODUCTS PER MANUFACTURER'S REQUIREMENTS.

B. INSTALL CABLES IN CONDUIT PROVIDE BY ELECTRICAL SCOPE OF WORK AS HOME RUNS TO PANELS OVERHEAD AND ABOVE ACCESSIBLE CEILINGS WHERE AVAILABLE.

C. COORDINATE WITH ELECTRICAL WORK PROVIDING POWER FOR SECURITY SYSTEMS TO CREATED A COMPLETE AND OPERATIONAL SYSTEM WITH ARCHITECTURAL DOOR HARDWARE SCHEDULE, ARCHITECT, ELECTRICAL AND OWNERS AGENT. VERIFY ALL REQUIREMENTS PRIOR TO ROUGH-IN.

D. TELECOMMUNICATIONS AND SECURITY CONTRACTOR SHALL BE RESPONSIBLE TO REVIEW OTHER DRAWINGS AND SUBMITTALS AND COORDINATE FOR FULLY OPERATIONAL SYSTEMS. LOCATION TELECOMMUNICATIONS OUTLETS WITHIN SECURITY AND FIRE ALARM ENCLOSURES SHALL BE PERFORMED BY TELECOMMUNICATIONS CONTRACTOR. ELEVATOR MECHANICAL ENCLOSURES SHALL BE COORDINATED TO INCLUDE MODULAR JACK INTERFACE BETWEEN HORIZONTAL CABLING AND ELEVATOR EQUIPMENT TERMINATIONS. PATCH CORD TO BE PROVIDED BY TELECOMMUNICATIONS CONTRACTOR. COORDINATE LOCATION OF POWER RECEPTACLE WITHIN COMMUNICATIONS CABINET TO AVOID CONFLICT WITH RACK MOUNTED EQUIPMENT.

E. COORDINATE OUTLET LOCATION WITH THE MECHANICAL CONTRACTOR TO PROVIDE REMOTE MONITORING OF SYSTEMS. COORDINATE OUTLET LOCATION TO MINIMIZE LINE CORD LENGTH AND EXPOSURE ACCIDENTAL DISCONNECTION.

F. COORDINATE MOUNTING HEIGHTS AND ORIENTATION OF DEVICES IN MILLWORK WITH ARCHITECTURAL ELEVATIONS.

G. THIS DRAWING INCLUDES SEVERAL LOW VOLTAGE ELECTRICAL CABLING SYSTEMS TO BE PROVIDED UNDER THE ELECTRICAL SCOPE OF WORK. MASTER ANTENNA TELEVISION (MATV), ACCESS CONTROL, VOICE/DATA, PATIENT WANDER PROTECTION, NURSE CALL AND TELECOMMUNICATIONS BONDING AND GROUNDING.

H. THE MATV SYSTEM INCLUDES DIRECTIONAL TAPS AND CABLE FROM THE UNDERGROUND CONDUIT SYSTEM INTO THE BUILDING, A MULTIUSER AMPLIFIER AND DROP CABLES TO THE TELEVISION LOCATIONS. TELEVISIONS ARE OWNER PROVIDED. RE: BE3.2-2.

I. THE ACCESS CONTROL SYSTEM INCLUDES DOOR CONTROLLERS, POWER SUPPLIES, CABLING, DOOR CONTACTS, CARD READERS, REQUEST TO EXIT, AND CONNECTIVITY TO THE EXISTING MONITORING STATION. DOOR HARDWARE INCLUDES PATIENT WANDER GUARD SYSTEM, MAGNETIC LOCKS AND AUTOMATIC DOOR OPERATORS. RE: BE3.2-5 AND AA6.2.

J. THE VOICE/DATA SYSTEM IN INCLUDES OPTICAL FIBER CABLE FROM BUILDING 67, CATEGORY 6 HORIZONTAL CABLING, TELECOMMUNICATION OUTLET LOCATIONS TO SUPPORT PHONE, COMPUTERS, WIRELESS DEVICES, DISTRIBUTED ANTENNA SYSTEM (DAS) AND OTHER UTILITY REMOTE CONTROLS AND MONITORING. RE: BE3.2-3.

K. THE PATIENT WANDER PROTECTION SYSTEM INCLUDES SENSORS ON EXTERIOR DOORS, WIRING, ANTENNAS, CONTROL STATIONS AND PATIENT-WORN DETECTABLE DEVICES. RE: BE3.2-6.

L. THE NURSE CALL SYSTEM INCLUDES A CONTROLLER IN THE TELECOMMUNICATION SPACE, DOME LIGHTS ROOM CONTROLLERS IN THE CORRIDORS, SINGLE PATIENT STATIONS IN THE MONITORED ROOMS, SPEAKER PILLOWS IN THE PATIENT BEDS, EMERGENCY PULL CORDS IN THE BATHROOMS, STAFF STATIONS IN THE KITCHEN AND OFFICE AND CONNECTIVITY TO THE MASTER NURSE STATION AND SIMILAR SYSTEM IN OTHER BUILDINGS VIA OPTICAL FIBER. RE: BE3.2-4.

M. THE TELECOMMUNICATION GROUNDING SYSTEM INCLUDES THE TELECOMMUNICATIONS MAIN GROUNDING BUSBAR IN THE TELECOMMUNICATIONS SPACE, A 3/0 BONDING CONDUCTOR TO THE ELECTRICAL SERVICE ENTRANCE GROUNDING ELECTRODE, #6 BONDING CONDUCTORS TO TELECOMMUNICATION BUSBARS AND BONDING CONDUCTORS TO METALLIC CONDUITS, CABLE TRAYS AND OTHER LOW VOLTAGE ELECTRICAL SYSTEM GROUND LUGS. RE: BE.2-1 AND -8.

SHEET NOTES:

1. CONDUITS FROM SIGNAL VAULT MH20. RE: SDE2.1-6 EXTEND TO COMM 200, FIRESTOP AND SEAL ENDS. INSTALL PULL BOX AS SHOWN ABOVE ACCESSIBLE CEILING.
2. 8-2" CONDUITS FROM FLOOR ABOVE THROUGH MECHANICAL SPACE. RE: BM2.4-1
3. TWO TELECOMMUNICATIONS OUTLETS INSIDE FIRE ALARM PANEL. RE: BFP3.1-1.
4. 12"Wx36"Lx6"D PULL BOX IN LINE WITH 2-4" CONDUITS FROM MH20.
5. TELECOMMUNICATIONS OUTLET FOR IRRIGATION CONTROL REMOTE MONITORING. COORDINATE LOCATION IN FIELD WITH IRRIGATION EQUIPMENT TO BE CONNECTED TO CAMPUS SYSTEM. RE: SDL2.1
6. TELECOMMUNICATIONS OUTLET INTEGRATED INTO PATIENT BED SERVICE WALL. RE: BA8.0-17.
7. NURSE CALL SYSTEM SINGLE PATIENT STATION WITH PILLOW SPEAKER. RE: BA8.0-17
8. CATV OUTLET FOR TELEVISION.
9. NURSE CALL SYSTEM AUDIO DOME LIGHT WITH ROOM CONTROLLER.
10. NURSE CALL SYSTEM DESKTOP STAFF STATION.
11. NURSE CALL SYSTEM WALL MOUNT STAFF STATION.
12. TELECOMMUNICATION OUTLET AND ADAAG COMPLIANT INSTRUMENT IN ELEVATOR CAB.
13. 1" CONDUIT FROM COMM 200, WEATHERPROOF BACKBOX, PULLS STRING AND BLANK FACEPLATE FOR SECURITY CAMERA.
14. SECURITY CAMERA BY OWNER.
15. TELECOMMUNICATION OUTLET FOR WALL MOUNT TELEPHONE.
16. TELECOMMUNICATION OUTLET IN CEILING ENCLOSURE FOR WIRELESS ACCESS POINT.
17. TELECOMMUNICATION OUTLET IN CEILING ENCLOSURE FOR REMOTE ACCESS UNIT OF DISTRIBUTED ANTENNA SYSTEM.
18. REMOTE ACCESS UNIT OF DISTRIBUTED ANTENNA SYSTEM.
19. TELECOMMUNICATION OUTLET IN FLOOR BOX WITH ELECTRICAL RECEPTACLES.
20. TELECOMMUNICATION OUTLET FOR GENERAL USE ADJACENT TO ELECTRICAL RECEPTACLE.
21. PATIENT WANDER PREVENTION SYSTEM KEY PAD. COORDINATE WITH DOOR HARDWARE, AND FIRE ALARM SYSTEM. REFER TO DOOR HARDWARE SCHEDULE.
22. MAGNETIC DOOR LOCKS, DOOR POSITION SWITCH AND POWER SUPPLY CONTROLLED BY PATIENT WANDERING SYSTEM.
23. PATIENT WANDER PREVENTION SYSTEM CONTROL UNIT AND EXCITER ANTENNA ABOVE CEILING. CONNECT TO SERVER VIA RS485 RE: AE3.2-8.
24. NURSE CALL SYSTEM EMERGENCY PULL CORD STATION IN BATHROOM. RE: BA8.0-15 AND 16.
25. ELECTRIC LATCH AND DOOR POSITION SWITCH PROVIDED BY OTHERS. COORDINATE SEQUENCE OF OPERATION WITH FIRE ALARM, ACCESS CONTROL AND DOOR OPERATOR. REFER TO DOOR HARDWARE SCHEDULE.
26. PROXIMITY CARD READER. COORDINATE SEQUENCE OF OPERATION WITH ELECTRIC LATCH AND DOOR OPERATOR.
27. ACCESS CONTROL SYSTEM DOOR CONTROLLER. PROVIDE CABLING TO CARD READER, ELECTRIC LATCH, REQUEST TO EXIT, DOOR OPERATOR AND MAIN CONTROL PANEL IN ROOM M/E 200. INTEGRATE WITH FIRE ALARM SYSTEM.
28. ELECTRIC LATCH AND DOOR POSITION SWITCH BY OTHERS. COORDINATE SEQUENCE OF OPERATION WITH FIRE ALARM AND ACCESS CONTROL. REFER TO DOOR HARDWARE SCHEDULE.
29. PROXIMITY CARD READER. COORDINATE SEQUENCE OF OPERATION WITH ELECTRIC LATCH.
30. ACCESS CONTROL SYSTEM DOOR CONTROLLER. PROVIDE CABLING TO CARD READER, ELECTRIC LATCH, REQUEST TO EXIT, AND MAIN CONTROL PANEL IN COMM 200. INTEGRATE WITH FIRE ALARM SYSTEM.
31. PATIENT WANDER PREVENTION SYSTEM SERVER. RE: BE3.2-6.
32. PROVIDE RESIDENT'S ROOM ACCESS CONTROL WIRING FOR DOOR HARDWARE PROVIDED BY OTHERS FROM PANEL IN TELECOMMUNICATIONS SPACE. REFER TO DOOR HARDWARE SCHEDULE.
33. PROVIDE ROOM ACCESS CONTROL WIRING FROM BUILDING ACCESS CONTROL PANEL IN TELECOMMUNICATION SPACE. REFER TO DOOR HARDWARE SCHEDULE.

REVISIONS	DATE

CSHQA

C.W. MOORE PLAZA
250 S. 5TH ST. BOISE, ID 83702
(208) 343-4635 FAX (208) 343-1858
http://www.cshqa.com

AMY K. DOCKTER, P.E.
C.W. MOORE PLAZA
250 S. 5TH ST
BOISE, IDAHO
PHONE: 208-343-4635 FAX: 208-343-1858

THESE DRAWINGS AND SPECIFICATIONS, AS INSTRUMENTS OF SERVICE, ARE AND SHALL REMAIN THE PROPERTY OF THE ARCHITECT / ENGINEER WHETHER THE PROJECT FOR WHICH THEY ARE MADE IS EXECUTED OR NOT. THESE DRAWINGS AND SPECIFICATIONS SHALL NOT BE USED BY ANY PERSON OR ENTITY ON OTHER PROJECTS, FOR ADDITIONS TO THIS PROJECT, OR COMPLETION OF THIS PROJECT-WHEN PHASED-WITHOUT THE WRITTEN CONSENT OF CSHQA OR ITS AFFILIATES. Copyright ©2011

STAMP: PROFESSIONAL ENGINEER REGISTERED 9201 12-1-11 STATE OF IDAHO AMY K. DOCKTER

CAD FILE NAME: 531-319_BE2.8.DWG
XREF FILE NAME: 531-319_xB_30X42TLBK.DWG, 531-319_xB_Base1.DWG

DRAWING TITLE: FIRST FLOOR TELECOMMUNICATION PLAN

APPROVED: CHIEF OF FACILITY MANAGEMENT SERVICE

APPROVED: MEDICAL CENTER DIRECTOR

PROJECT TITLE: BOISE VAMC NEW EXTENDED CARE UNIT BUILDING 'B' CLC

BUILDING NUMBER	CHECKED	DRAWN
122	AKD	JDR

LOCATION: VAMC BOISE, IDAHO

DATE: 12/01/2011

PROJECT NO. 531-319

DRAWING NO. BE2.8

DWG 69 OF 78

DEPARTMENT OF VETERANS AFFAIRS

Username: jromlein
Dec 01, 2011 - 1:59pm
Q:\2010\10101.0\ComEng\02_Drawings\531-319_BE2.8.dwg

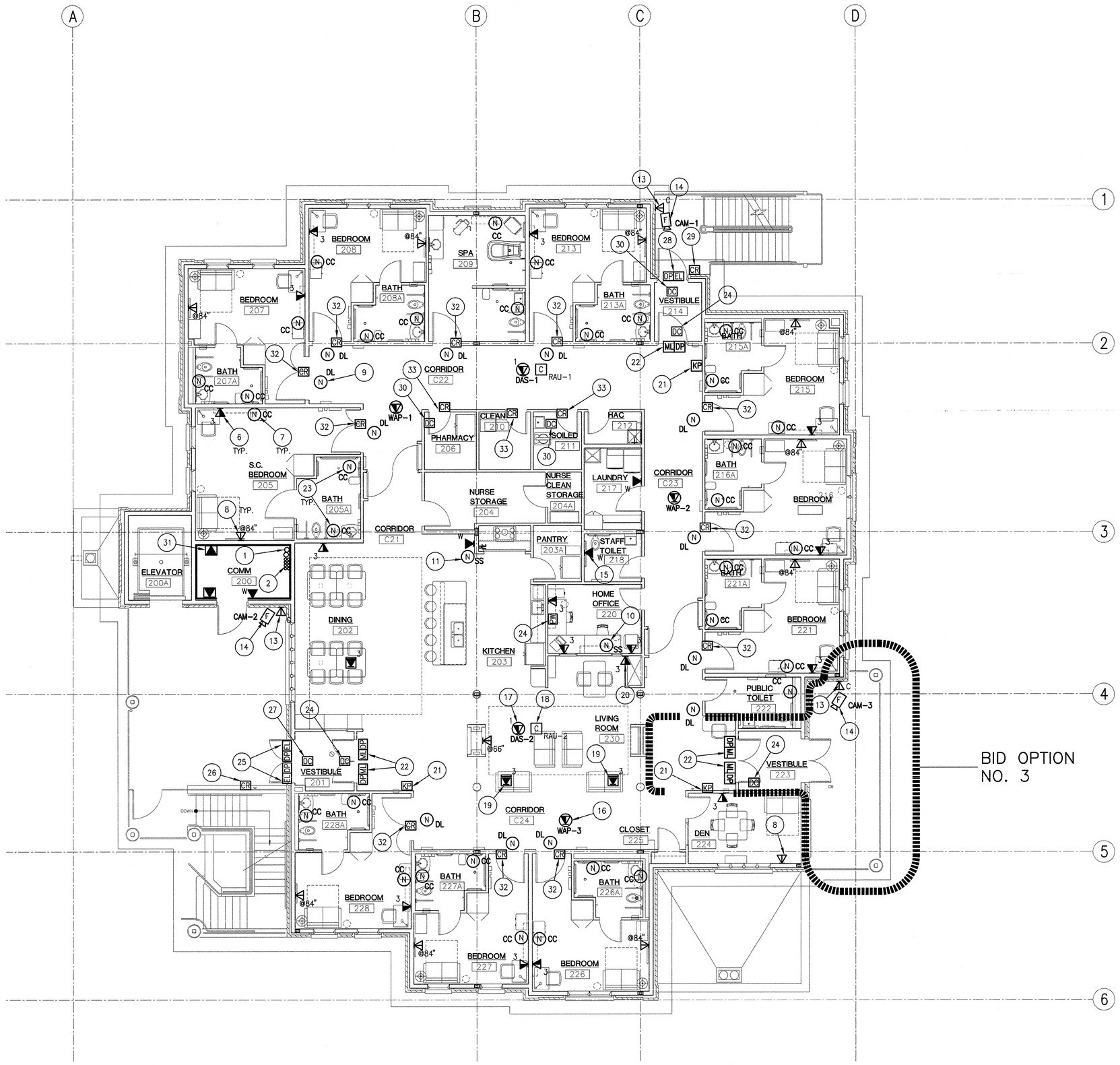

1 SECOND FLOOR TELECOMMUNICATION PLAN

0' 4' 8' 12' 16' 20' 24'

SCALE: 1/8" = 1'-0"

PROJECT NORTH

GENERAL NOTES:

A. INSTALL ALL PRODUCTS PER MANUFACTURER'S REQUIREMENTS.

B. INSTALL CABLES IN CONDUIT PROVIDE BY ELECTRICAL SCOPE OF WORK AS HOME RUNS TO PANELS OVERHEAD AND ABOVE ACCESSIBLE CEILINGS WHERE AVAILABLE.

C. COORDINATE WITH ELECTRICAL WORK PROVIDING POWER FOR SECURITY SYSTEMS TO CREATED A COMPLETE AND OPERATIONAL SYSTEM WITH ARCHITECTURAL DOOR HARDWARE SCHEDULE, ARCHITECT, ELECTRICAL AND OWNERS AGENT. VERIFY ALL REQUIREMENTS PRIOR TO ROUGH-IN.

D. TELECOMMUNICATIONS AND SECURITY CONTRACTOR SHALL BE RESPONSIBLE TO REVIEW OTHER DRAWINGS AND SUBMITTALS AND COORDINATE FOR FULLY OPERATIONAL SYSTEMS. LOCATION TELECOMMUNICATIONS OUTLETS WITHIN SECURITY AND FIRE ALARM ENCLOSURES SHALL BE PERFORMED BY TELECOMMUNICATIONS CONTRACTOR. ELEVATOR MECHANICAL ENCLOSURES SHALL BE COORDINATED TO INCLUDE MODULAR JACK INTERFACE BETWEEN HORIZONTAL CABLING AND ELEVATOR EQUIPMENT TERMINATIONS. PATCH CORD TO BE PROVIDED BY TELECOMMUNICATIONS CONTRACTOR. COORDINATE LOCATION OF POWER RECEPTACLE WITHIN COMMUNICATIONS CABINET TO AVOID CONFLICT WITH RACK MOUNTED EQUIPMENT.

E. COORDINATE OUTLET LOCATION WITH THE MECHANICAL CONTRACTOR TO PROVIDE REMOTE MONITORING OF SYSTEMS. COORDINATE OUTLET LOCATION TO MINIMIZE LINE CORD LENGTH AND EXPOSURE ACCIDENTAL DISCONNECTION.

F. COORDINATE MOUNTING HEIGHTS AND ORIENTATION OF DEVICES IN MILLWORK WITH ARCHITECTURAL ELEVATIONS.

G. THIS DRAWING INCLUDES SEVERAL LOW VOLTAGE ELECTRICAL CABLING SYSTEMS TO BE PROVIDED UNDER THE ELECTRICAL SCOPE OF WORK. MASTER ANTENNA TELEVISION (MATV), ACCESS CONTROL, VOICE/DATA, PATIENT WANDER PROTECTION, NURSE CALL AND TELECOMMUNICATIONS BONDING AND GROUNDING.

H. THE MATV SYSTEM INCLUDES DIRECTIONAL TAPS AND CABLE FROM THE UNDERGROUND CONDUIT SYSTEM INTO THE BUILDING, A MULTIUSER AMPLIFIER AND DROP CABLES TO THE TELEVISION LOCATIONS. TELEVISIONS ARE OWNER PROVIDED. RE: BE3.2-2.

I. THE ACCESS CONTROL SYSTEM INCLUDES DOOR CONTROLLERS, POWER SUPPLIES, CABLING, DOOR CONTACTS, CARD READERS, REQUEST TO EXIT, AND CONNECTIVITY TO THE EXISTING MONITORING STATION. DOOR HARDWARE INCLUDES PATIENT WANDER GUARD SYSTEM, MAGNETIC LOCKS AND AUTOMATIC DOOR OPERATORS. RE: BE3.2-5 AND A46.2.

J. THE VOICE/DATA SYSTEM IN INCLUDES OPTICAL FIBER CABLE FROM BUILDING 67, CATEGORY 6 HORIZONTAL CABLING, TELECOMMUNICATION OUTLET LOCATIONS TO SUPPORT PHONE, COMPUTERS, WIRELESS DEVICES, DISTRIBUTED ANTENNA SYSTEM (DAS) AND OTHER UTILITY REMOTE CONTROLS AND MONITORING. RE: BE3.2-3.

K. THE PATIENT WANDER PROTECTION SYSTEM INCLUDES SENSORS ON EXTERIOR DOORS, WIRING, ANTENNAS, CONTROL STATIONS AND PATIENT-WORN DETECTABLE DEVICES. RE: BE3.2-6.

L. THE NURSE CALL SYSTEM INCLUDES A CONTROLLER IN THE TELECOMMUNICATION SPACE, DOME LIGHTS ROOM CONTROLLERS IN THE CORRIDORS, SINGLE PATIENT STATIONS IN THE MONITORED ROOMS, SPEAKER PILLOWS IN THE PATIENT BEDS, EMERGENCY PULL CORDS IN THE BATHROOMS, STAFF STATIONS IN THE KITCHEN AND OFFICE AND CONNECTIVITY TO THE MASTER NURSE STATION AND SIMILAR SYSTEM IN OTHER BUILDINGS VIA OPTICAL FIBER. RE: BE3.2-4.

M. THE TELECOMMUNICATION GROUNDING SYSTEM INCLUDES THE TELECOMMUNICATIONS MAIN GROUNDING BUSBAR IN THE TELECOMMUNICATIONS SPACE, A 3/0 BONDING CONDUCTOR TO THE ELECTRICAL SERVICE ENTRANCE GROUNDING ELECTRODE. #6 BONDING CONDUCTORS TO TELECOMMUNICATION BUSBARS AND BONDING CONDUCTORS TO METALLIC CONDUITS, CABLE TRAYS AND OTHER LOW VOLTAGE ELECTRICAL SYSTEM GROUND LUGS. RE: BE3.2-1 AND -8.

SHEET NOTES:

1. 2-4" CONDUITS THROUGH MECHANICAL ROOM BELOW AND UNDERGROUND TO MH20.
2. 8-4" CONDUITS TO FLOOR BELOW FOR LOW VOLTAGE CABLING.
3. PATIENT WANDER PREVENTION SYSTEM SERVER. RE: BE3.2-6.
4. NO NOTE PROVIDED.
5. NO NOTE PROVIDED.
6. TELECOMMUNICATIONS OUTLET INTEGRATED INTO PATIENT BED SERVICE WALL. RE: BA8.0-17.
7. NURSE CALL SYSTEM SINGLE PATIENT STATION WITH PILLOW SPEAKER. RE: BA8.0-17.
8. CATV OUTLET FOR TELEVISION.
9. NURSE CALL SYSTEM AUDIO DOME LIGHT WITH ROOM CONTROLLER.
10. NURSE CALL SYSTEM DESKTOP STAFF STATION.
11. NURSE CALL SYSTEM WALL MOUNT STAFF STATION.
12. NO NOTE PROVIDED.
13. 1" CONDUIT FROM COMM 200, WEATHERPROOF BACKBOX, PULL STRING AND BLANK FACEPLATE FOR SECURITY CAMERA.
14. SECURITY CAMERA AND CABLING BY OWNER.
15. TELECOMMUNICATION OUTLET FOR WALL MOUNT TELEPHONE.
16. TELECOMMUNICATION OUTLET IN CEILING ENCLOSURE FOR WIRELESS ACCESS POINT.
17. TELECOMMUNICATION OUTLET IN CEILING ENCLOSURE FOR REMOTE ACCESS UNIT OF DISTRIBUTED ANTENNA SYSTEM.
18. REMOTE ACCESS UNIT OF DISTRIBUTED ANTENNA SYSTEM.
19. TELECOMMUNICATION OUTLET IN FLOOR BOX WITH ELECTRICAL RECEPTACLES.
20. TELECOMMUNICATION OUTLET FOR GENERAL USE ADJACENT TO ELECTRICAL RECEPTACLE.
21. PATIENT WANDER PREVENTION SYSTEM KEY PAD. COORDINATE OPERATION WITH DOOR HARDWARE, ACCESS CONTROL AND FIRE ALARM. RE: BE3.2-8.
22. DOOR HARDWARE WITH INTERNAL DOOR POSITION SWITCH, DELAYED EGRESS AND LOCAL SOUNDER.
23. NURSE CALL SYSTEM EMERGENCY PULL STATION IN BATHROOM. RE: BA8.0-15 AND 16.
24. PATIENT WANDER PREVENTION SYSTEM CONTROL UNIT ABOVE CEILING. CONNECT TO SYSTEM KEY PAD, EXCITER ANTENNA, ELECTRICAL POWER, DOOR OPERATOR AND MAGNETIC LOCKS.
25. ELECTRONIC LATCH AND DOOR POSITION SWITCH BY OTHERS. COORDINATE SEQUENCE OF OPERATION WITH FIRE ALARM, ACCESS CONTROL AND DOOR OPERATOR.
26. PROXIMITY CARD READER. COORDINATE SEQUENCE OF OPERATION WITH ELECTRIC LATCH. REFER TO DOOR HARDWARE SCHEDULE.
27. ACCESS CONTROL SYSTEM DOOR CONTROLLER. PROVIDE CABLING TO CARD READER, MAGNETIC LOCKS, REQUEST TO EXIT, DOOR OPERATOR AND MAIN CONTROL PANEL IN ROOM M/E 200. INTEGRATE WITH FIRE ALARM SYSTEM.
28. ELECTRIC LATCH AND DOOR POSITION SWITCH BY OTHERS. COORDINATE SEQUENCE OF OPERATION WITH FIRE ALARM AND ACCESS CONTROL. REFER TO DOOR HARDWARE SCHEDULE.
29. PROXIMITY CARD READER. COORDINATE SEQUENCE OF OPERATION WITH ELECTRIC LATCH.
30. ACCESS CONTROL SYSTEM DOOR CONTROLLER. PROVIDE CABLING TO CARD READER, ELECTRIC LATCH, REQUEST TO EXIT, AND MAIN CONTROL PANEL IN ROOM M/E 200. INTEGRATE WITH FIRE ALARM SYSTEM.
31. TELECOMMUNICATIONS OUTLET FOR DDC REMOTE MONITORING. COORDINATE LOCATION IN FIELD WITH MECHANICAL EQUIPMENT TO BE CONNECTED TO NETWORK.
32. PROVIDE RESIDENT'S ROOM ACCESS CONTROL WIRING FOR DOOR HARDWARE PROVIDED BY OTHERS FROM PANEL IN TELECOMMUNICATIONS SPACE. REFER TO DOOR HARDWARE SCHEDULE.
33. PROVIDE ROOM ACCESS CONTROL WIRING FROM BUILDING ACCESS CONTROL PANEL IN TELECOMMUNICATION SPACE. REFER TO DOOR HARDWARE SCHEDULE.

REVISIONS	DATE

CSHQA

C.W. MOORE PLAZA
250 S. 5TH ST. BOISE, ID 83702
(208) 343-4635 FAX (208) 343-1858
http://www.cshqa.com

AMY K. DOCKTER, P.E.
C.W. MOORE PLAZA
250 S. 5TH ST
BOISE, IDAHO
PHONE: 208-343-4635 FAX: 208-343-1858

THESE DRAWINGS AND SPECIFICATIONS, AS INSTRUMENTS OF SERVICE, ARE AND SHALL REMAIN THE PROPERTY OF THE ARCHITECT / ENGINEER WHETHER THE PROJECT FOR WHICH THEY ARE MADE IS EXECUTED OR NOT. THESE DRAWINGS AND SPECIFICATIONS MAY NOT BE REPRODUCED BY ANY PERSON OR ENTITY ON OTHER PROJECTS, FOR ADDITIONS TO THIS PROJECT, OR COMPLETION OF THIS PROJECT WHEN PHASED WITHOUT THE WRITTEN CONSENT OF CSHQA OR ITS AFFILIATES. Copyright ©2011

STAMP

PROFESSIONAL ENGINEER CERTIFICATE 9201 12-1-11 STATE OF IDAHO AMY K. DOCKTER

CAD FILE NAME: 531-319_BE2.9.DWG

XREF FILE NAME: 531-319_xB_30X42TLBK.DWG 531-319_xB_Base2.DWG

DRAWING TITLE: SECOND FLOOR TELECOMMUNICATION PLAN

APPROVED: CHIEF OF FACILITY MANAGEMENT SERVICE

APPROVED: MEDICAL CENTER DIRECTOR

PROJECT TITLE: BOISE VAMC NEW EXTENDED CARE UNIT BUILDING 'B' CLC

BUILDING NUMBER: 122 | CHECKED: AKD | DRAWN: JDR

LOCATION: VAMC BOISE, IDAHO

DATE: 12/01/2011

PROJECT NO. 531-319

DRAWING NO. BE2.9

DWG 70 OF 78

DEPARTMENT OF VETERANS AFFAIRS

Username: jromlein
Dec 01, 2011 - 1:53pm
Q:\2010\10101.0\Contrg\02_Drawings\531-319_BE2.9.dwg

EMERGENCY POWER BUILDING LOAD SUMMARY

NUMBER	DESCRIPTION	208-V AMPERE TOTALS A	B	C	REMARKS
1	PANEL 'E11'	80	85	82	
2	PANEL 'E21'	115	115	107	
3	ELEVATOR	78	78	78	
	TOTAL CONNECTED LOAD:	273	278	267	12/01/11

N.E.C. DEMAND CALCULATIONS

	ACTUAL KVA	DEMAND FACTOR	DEMAND KVA	
LIGHTING AND OTHER CONTINUOUS LOAD:	2.8	125%	3.5	Excludes track and show window lighting.
TRACK LIGHTING:	0.0	N/A	0.0	Length of track: 0 ft
SHOW WINDOWS:	0.0	N/A	0.0	Length of show window: 0 ft
RECEPTACLE LOAD:	8.8	100%	8.8	100% of the first 10 kVA, plus 50% over 10 kVA.
KITCHEN EQUIPMENT LOAD:	0.0	100%	0.0	Based on 0 piece(s) of equipment.
HEATING (COINCIDENTAL) LOAD:	0.0	100%	0.0	Includes space heat in excess of cooling and other electric heat.
MOTORS AND OTHER NON-CONTINUOUS OR MISCELLANEOUS LOAD:	58.4	100%	58.4	All other loads excluding maximum motor load.
LARGEST MOTOR LOAD:	28.2	125%	35.3	
TOTALS:	98.2	108%	106.0	MINIMUM 3-PHASE FEEDER: 300-AMPS

NORMAL POWER BUILDING LOAD SUMMARY

NUMBER	DESCRIPTION	208-V AMPERE TOTALS A	B	C	REMARKS
1	PANEL '11'	77	91	71	
2	PANEL '12'	158	162	180	
3	PANEL '21'	94	97	94	
4	PANEL '22'	157	162	174	
5	CHILLER CH-B1	150	150	150	
	TOTAL CONNECTED LOAD:	636	662	669	12/01/11

N.E.C. DEMAND CALCULATIONS

	ACTUAL KVA	DEMAND FACTOR	DEMAND KVA	
LIGHTING AND OTHER CONTINUOUS LOAD:	8.8	125%	11.0	Excludes track and show window lighting.
TRACK LIGHTING:	0.0	N/A	0.0	Length of track: 0 ft
SHOW WINDOWS:	0.0	N/A	0.0	Length of show window: 0 ft
RECEPTACLE LOAD:	43.1	62%	26.5	100% of the first 10 kVA, plus 50% over 10 kVA.
KITCHEN EQUIPMENT LOAD:	79.5	65%	51.7	Based on 20 piece(s) of equipment.
HEATING (COINCIDENTAL) LOAD:	6.2	100%	6.2	Includes space heat in excess of cooling and other electric heat.
MOTORS AND OTHER NON-CONTINUOUS OR MISCELLANEOUS LOAD:	44.3	100%	44.3	All other loads excluding maximum motor load.
LARGEST MOTOR LOAD:	54.0	125%	67.5	
TOTALS:	235.8	88%	207.1	MINIMUM 3-PHASE FEEDER: 588-AMPS

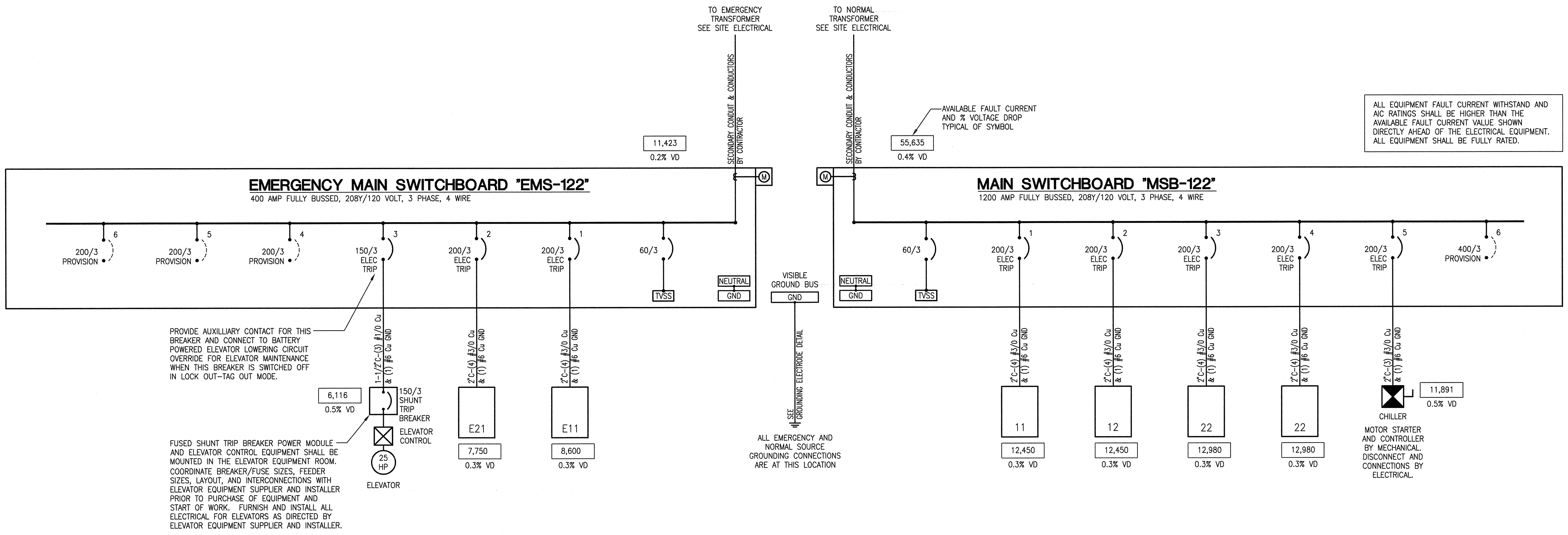

PANEL 'E11'
208Y/120-VOLT, 3-PHASE, 4-WIRE
225-AMP, MAIN LUGS ONLY
MOUNTING: SURFACE

NOTES: COMMERCIAL BOLT-ON CIRCUIT BREAKER PANELBOARD.
PROVIDE FLOOR TO CEILING REMOVEABLE METAL SKIRTS BY PANEL MFR. IN COLOR TO MATCH PANEL.
PROVIDE ARC FLASH CIRCUIT INTERRUPTER TYPE BREAKERS PER NEC 210.13 AND 210.18.

CKT NO	LOAD DESCRIPTION	REF NO	BRKR TYPE	LOAD AMPS	BREAKER P	BREAKER AMP	PHASE AMPS A	B	C	BREAKER AMP	P	LOAD AMPS	BRKR TYPE	REF NO	LOAD DESCRIPTION	CKT NO
1	LTS- EXTERIOR			1.8	1	20	3.4			20	1	1.6			LTS- NORTHWEST BEDROOMS	2
3	LTS- OFFICE 120, CORRIDOR C14			2.9	1	20		4.5		20	1	1.6			LTS- SOUTHEAST BEDROOMS	4
5	SPARE				1	20			2.0	20	1	2.0			LTS- C14, LIVING AND DINING	6
7	FCU-B1, B2, B3			10.5	1	20	15.5			20	1	5.0	LO		FIRE ALARM PANEL	8
9	FCU-B4, B5, B6			11.9	1	20		16.9		20	1	5.0			DOOR SECURITY SYSTEMS	10
11	FCU-B7, B8, B9			14.8	1	20			24.8	20	1	10.0			NORTH ENTRY DOOR OPERATOR	12
13	FCU-B10, B11			11.7	1	20	21.7			20	1	10.0			SOUTH ENTRY DOOR OPERATOR	14
15	FCU-B12, B13, B14			11.6	1	20		11.6		20	1				SPARE	16
17	FCU-B15, B16			7.0	1	20			7.0	20	1				SPARE	18
19	SPARE				1	20	0.0			20	1				SPARE	20
21	SPARE				1	20		6.2		15	2	6.2			CU-3, FC-3	22
23	P-HW-1, P-HW-2, MS-1			10.2	1	20			16.4	**	*	6.2			CU-3, FC-3	24
25	P-HWHS-3 & 4			13.2	3	20	25.3			25	2	12.1			CU-1, FC-1	26
27	P-HWHS-3 & 4			13.2	*	**		25.3		**	*	12.1			CU-1, FC-1	28
29	P-HWHS-3 & 4			13.2	*	**			15.2	20	1	2.0			ELEVATOR EQUIP ROOM	30
31	REC-BEDROOMS – 113/108/107/105			6.0	1	20	7.7			20	1	1.7			ELEVATOR PIT	32
33	REC-BEDROOMS – 121/116/115			6.0	1	20		15.8		20	1	9.8			SUMP PUMP	34
35	REC-BEDROOMS – 126/127/128			6.0	1	20			11.0	20	1	5.0			ELEVATOR CAR	36
37	REC-PHARMACY ACUDOSE			1.5	1	20	6.0			20	1	4.5			REC-NURSE STORAGE 104	38
39	REC-PHARMACY ACUDOSE			1.5	1	20		4.5		20	1	3.0			REC-HOME OFFICE 120	40
41	REC-PHARMACY ACUDOSE			1.5	1	20			6.0	20	1	4.5			REC-HOME OFFICE 120	42
	PROJECT #10101 Panels					PANEL TOTALS:	80	85	82	6% DIFFERENCE					12/01/11	

	ACTUAL KVA	DEMAND FACTOR	DEMAND KVA	
LIGHTING AND OTHER CONTINUOUS LOAD:	1.6	125%	2.0	Excludes track and show window lighting.
TRACK LIGHTING:	0.0	N/A	0.0	Length of Track: 0 ft
SHOW WINDOWS:	0.0	N/A	0.0	Length of show window: 0 ft
RECEPTACLE LOAD:	4.1	100%	4.1	100% of the first 10 kVA, plus 50% over 10 kVA.
KITCHEN EQUIPMENT LOAD:	0.0	100%	0.0	Based on 0 pieces of equipment.
HEATING (COINCIDENTAL) LOAD:	0.0	100%	0.0	Includes space heat in excess of cooling and other electric heat.
HEATING OR OTHER NON-COINCIDENTAL LOAD:	0.0	0%	0.0	Smaller of heat or cooling when loads do not operate simultaneously.
MOTORS AND OTHER NON-CONTINUOUS OR MISCELLANEOUS LOAD:	19.1	100%	19.1	All other loads excluding maximum motor load.
LARGEST MOTOR LOAD:	4.8	125%	5.9	
TOTALS:	29.6	105%	31.2	MINIMUM FEEDER: 87-AMPS

PANEL '11'
208Y/120-VOLT, 3-PHASE, 4-WIRE
225-AMP, MAIN LUGS ONLY
MOUNTING: SURFACE

NOTES: COMMERCIAL BOLT-ON CIRCUIT BREAKER PANELBOARD.
PROVIDE FLOOR TO CEILING REMOVEABLE METAL SKIRTS BY PANEL MFR. IN COLOR TO MATCH PANEL.
PROVIDE ARC FLASH CIRCUIT INTERRUPTER TYPE BREAKERS PER NEC 210.13 AND 210.18.

CKT NO	LOAD DESCRIPTION	REF NO	BRKR TYPE	LOAD AMPS	BREAKER P	BREAKER AMP	PHASE AMPS A	B	C	BREAKER AMP	P	LOAD AMPS	BRKR TYPE	REF NO	LOAD DESCRIPTION	CKT NO
1	LTS- BEDROOMS 105,107,108,SPA			4.8	1	20	9.6			20	1	4.8			LTS- BEDROOMS 113,115,116,121,122	2
3	LTS- SUPPORT ROOMS			3.7	1	20		11.3		20	1	7.6			LTS- DEN, GYM, 126-127,128	4
5	LTS- 102, 103			8.3	1	20			15.7	20	1	7.4			LTS- 130, C14	6
7	SPARE				1	20	0.0			20	1				SPARE	8
9	SPARE				1	20		0.0		20	1				SPARE	10
11	SPARE				1	20			0.0	20	1				SPARE	12
13	SPARE				1	20	0.0			20	1				SPARE	14
15	SPARE				1	20		12.0		20	1	12.0			LIKORAIL – RM 126	16
17	SPARE				1	20			12.0	20	1	12.0			LIKORAIL – RM 127	18
19	SPARE				1	20	12.0			20	1	12.0			LIKORAIL – RM 128	20
21	SPARE				1	20		12.0		20	1	12.0			LIKORAIL – RM 105	22
23	SPARE				1	20			12.0	20	1	12.0			LIKORAIL – RM 107	24
25	SPARE				1	20	12.0			20	1	12.0			LIKORAIL – RM 108	26
27	SPARE				1	20		12.0		20	1	12.0			LIKORAIL – RM 113	28
29	SPARE				1	20			4.0	20	1	4.0			REC – LAUNDRY/STAFF TOILET/DBF	30
31	REC – BEDROOM 113			10.5	1	20	21.0			20	1	10.5			REC – BEDROOM 108	32
33	REC – BEDROOM 115			10.5	1	20		21.0		20	1	10.5			REC – BEDROOM 107	34
35	REC – KITCHEN 103			4.5	1	20			15.0	20	1	10.5			REC – BEDROOM 105	36
37	REC – BEDROOM 119			10.5	1	20	22.5			20	1	12.0			LIKORAIL – RM 115	38
39	REC – BEDROOM 121			10.5	1	20		22.5		20	1	12.0			LIKORAIL – RM 116	40
41	SPARE				1	20			12.0	20	1	12.0			LIKORAIL – RM 121	42
	PROJECT #10101 Panels					PANEL TOTALS:	77	91	71						12/01/11	

	ACTUAL KVA	DEMAND FACTOR	DEMAND KVA	
LIGHTING AND OTHER CONTINUOUS LOAD:	4.4	125%	5.5	Excludes track and show window lighting.
TRACK LIGHTING:	0.0	N/A	0.0	Length of Track: 0 ft
SHOW WINDOWS:	0.0	N/A	0.0	Length of show window: 0 ft
RECEPTACLE LOAD:	9.8	100%	9.8	100% of the first 10 kVA, plus 50% over 10 kVA.
KITCHEN EQUIPMENT LOAD:	0.0	100%	0.0	Based on 0 pieces of equipment.
HEATING (COINCIDENTAL) LOAD:	0.0	100%	0.0	Includes space heat in excess of cooling and other electric heat.
HEATING OR OTHER NON-COINCIDENTAL LOAD:	0.0	0%	0.0	Smaller of heat or cooling when loads do not operate simultaneously.
MOTORS AND OTHER NON-CONTINUOUS OR MISCELLANEOUS LOAD:	14.4	100%	14.4	All other loads excluding maximum motor load.
LARGEST MOTOR LOAD:	0.0	125%	0.0	
TOTALS:	28.6	104%	29.7	MINIMUM FEEDER: 83-AMPS

PANEL '12'
208Y/120-VOLT, 3-PHASE, 4-WIRE
225-AMP, MAIN LUGS ONLY
MOUNTING: SURFACE

NOTES: COMMERCIAL BOLT-ON CIRCUIT BREAKER PANELBOARD.
PROVIDE FLOOR TO CEILING REMOVEABLE METAL SKIRTS BY PANEL MFR. IN COLOR TO MATCH PANEL.
PROVIDE ARC FLASH CIRCUIT INTERRUPTER TYPE BREAKERS PER NEC 210.13 AND 210.18.

CKT NO	LOAD DESCRIPTION	REF NO	BRKR TYPE	LOAD AMPS	BREAKER P	BREAKER AMP	PHASE AMPS A	B	C	BREAKER AMP	P	LOAD AMPS	BRKR TYPE	REF NO	LOAD DESCRIPTION	CKT NO
1	REC-BEDROOM 128			10.5	1	20	25.5			20	1	15.0			REFRIGERATOR W/ICE&H20	2
3	REC-BEDROOM 127			10.5	1	20		17.5		20	1	7.0			ICE MACHINE	4
5	REC-BEDROOM 126			10.5	1	20			25.5	20	1	15.0			REFRIGERATOR NO ICE OR H20	6
7	REC-PHAR/CLEAN/SOILED/HAC			7.5	1	20	8.5			20	1	1.0			FIREPLACE	8
9	REC-SPA 109			6.0	1	20		6.0		20	1				SPARE	10
11	REC-PUB TOILET 122			1.5	1	20			1.5	20	1				SPARE	12
13	REC-HOME GYM 125			3.0	1	20	3.0			20	1				SPARE	14
15	REC-HOME GYM 125			3.0	1	20		3.0		20	1				SPARE	16
17	REC-HOME GYM 125			3.0	1	20			18.0	20	2	15.0			FOOD WARMER – CEILING	18
19	REC-DEN 124			6.0	1	20	21.0			**	*	15.0			FOOD WARMER – CEILING	20
21	REC-LIVING 130 DINING 102			7.5	1	20		22.5		20	2	15.0			FOOD WARMER – CEILING	22
23	REC-DINING ROOM 102			6.0	1	20			21.0	**	*	15.0			FOOD WARMER – CEILING	24
25	REC-LIVING ROOM 130			6.0	1	20	18.0			20	1	12.0			WASHING MACHINE	26
27	REC-CORR C14/EXT			7.5	1	20		25.5		30	2	18.0			DRYER	28
29	REC-CORR C12/C13/VEST114/EXT			7.5	1	20			25.5	**	*	18.0			DRYER	30
31	VERNA CARE MACERATOR			4.8	2	20	39.4			50	2	34.6			OVEN	32
33	VERNA CARE MACERATOR			4.8	*	**		39.4		**	*	34.6			OVEN	34
35	HYGIENE SYSTEM BATH			5.8	1	20			43.5	50	2	37.7			STOVE TOP	36
37	TOWEL WARMER			5.0	1	20	42.7			**	*	37.7			STOVE TOP	38
39	MICROWAVE			10.0	1	20		47.7		50	2	37.7			DISH WASHER	40
41	TRASH COMPACTOR			7.2	1	20			44.9	**	*	37.7			DISH WASHER	42
	PROJECT #10101 Panels					PANEL TOTALS:	158	162	180						12/01/11	

	ACTUAL KVA	DEMAND FACTOR	DEMAND KVA	
LIGHTING AND OTHER CONTINUOUS LOAD:	0.0	125%	0.0	Excludes track and show window lighting.
TRACK LIGHTING:	0.0	N/A	0.0	Length of Track: 0 ft
SHOW WINDOWS:	0.0	N/A	0.0	Length of show window: 0 ft
RECEPTACLE LOAD:	11.5	93%	10.8	100% of the first 10 kVA, plus 50% over 10 kVA.
KITCHEN EQUIPMENT LOAD:	40.1	65%	26.1	Based on 10 pieces of equipment.
HEATING (COINCIDENTAL) LOAD:	0.6	100%	0.6	Includes space heat in excess of cooling and other electric heat.
HEATING OR OTHER NON-COINCIDENTAL LOAD:	0.0	0%	0.0	Smaller of heat or cooling when loads do not operate simultaneously.
MOTORS AND OTHER NON-CONTINUOUS OR MISCELLANEOUS LOAD:	7.7	100%	7.7	All other loads excluding maximum motor load.
LARGEST MOTOR LOAD:	0.0	125%	0.0	
TOTALS:	60.0	75%	45.2	MINIMUM FEEDER: 125-AMPS

PANEL 'E21'
208Y/120-VOLT, 3-PHASE, 4-WIRE
225-AMP, MAIN LUGS ONLY
MOUNTING: SURFACE

NOTES: COMMERCIAL BOLT-ON CIRCUIT BREAKER PANELBOARD.
PROVIDE FLOOR TO CEILING REMOVEABLE METAL SKIRTS BY PANEL MFR. IN COLOR TO MATCH PANEL.
PROVIDE ARC FLASH CIRCUIT INTERRUPTER TYPE BREAKERS PER NEC 210.13 AND 210.18.

CKT NO	LOAD DESCRIPTION	REF NO	BRKR TYPE	LOAD AMPS	BREAKER P	BREAKER AMP	PHASE AMPS A	B	C	BREAKER AMP	P	LOAD AMPS	BRKR TYPE	REF NO	LOAD DESCRIPTION	CKT NO
1	LTS- EXTERIOR			1.8	1	20	3.4			20	1	1.6			LTS- NORTHWEST BEDROOMS	2
3	LTS- OFFICE 220, CORRIDOR C24			2.9	1	20		4.5		20	1	1.6			LTS- SOUTHEAST BEDROOMS	4
5	SPARE				1	20			2.0	20	1	2.0			LTS- C24, LIVING AND DINING	6
7	FCU-B17, B18, B19			10.5	1	20	26.5			30	2	16.0			TELECOM UPS 'A'	8
9	FCU-B20, B21, B22			10.9	1	20		26.9		**	*	16.0			TELECOM UPS 'A'	10
11	FCU-B23, B24, B25			14.8	1	20			30.8	30	2	16.0			TELECOM UPS 'B'	12
13	FCU-B26, B27			12.7	1	20	28.7			**	*	16.0			TELECOM UPS 'B'	14
15	FCU-B28, B29, B30			11.9	1	20		27.9		30	2	16.0			TELECOM UPS 'C'	16
17	FCU-B31, B32			7.0	1	20			23.0	**	*	16.0			TELECOM UPS 'C'	18
19	SPARE				1	20	16.0			30	2	16.0			TELECOM UPS 'D'	20
21	CU-2, FC-2			6.2	2	20		22.2		**	*	16.0			TELECOM UPS 'D'	22
23	CU-2, FC-2			6.2	*	**			10.7	20	1	4.5			REC-COMM 200	24
25	ERU-B1			13.2	3	20	18.2			20	1	5.0			ACCESS CONTROL PWR SUP	26
27	ERU-B1			13.2	*	**		18.2		20	1	5.0			DOOR SECURITY SYSTEMS	28
29	ERU-B1			13.2	*	**			23.2	20	1	10.0			NORTH ENTRY DOOR OPERATOR	30
31	REC-BEDROOMS – 213/208/207/205			6.0	1	20	16.0			20	1	10.0			SOUTH ENTRY DOOR OPERATOR	32
33	REC-BEDROOMS – 221/216/215			6.0	1	20		11.0		20	1	5.0			RESIDENT ROOM ACCESS	34
35	REC-BEDROOMS – 226/227/228			6.0	1	20			11.0	20	1	5.0			MECHANICAL DDC PANEL	36
37	REC-PHARMACY ACUDOSE			1.5	1	20	6.0			20	1	4.5			REC-NURSE STORAGE 204	38
39	REC-PHARMACY ACUDOSE			1.5	1	20		4.5		20	1	3.0			REC-HOME OFFICE 220	40
41	REC-PHARMACY ACUDOSE			1.5	1	20			6.0	20	1	4.5			REC-HOME OFFICE 220	42
	PROJECT #10101 Panels					PANEL TOTALS:	115	115	107						12/01/11	

	ACTUAL KVA	DEMAND FACTOR	DEMAND KVA	
LIGHTING AND OTHER CONTINUOUS LOAD:	1.2	125%	1.5	Excludes track and show window lighting.
TRACK LIGHTING:	0.0	N/A	0.0	Length of Track: 0 ft
SHOW WINDOWS:	0.0	N/A	0.0	Length of show window: 0 ft
RECEPTACLE LOAD:	4.7	100%	4.7	100% of the first 10 kVA, plus 50% over 10 kVA.
KITCHEN EQUIPMENT LOAD:	0.0	100%	0.0	Based on 0 pieces of equipment.
HEATING (COINCIDENTAL) LOAD:	0.0	100%	0.0	Includes space heat in excess of cooling and other electric heat.
HEATING OR OTHER NON-COINCIDENTAL LOAD:	0.0	0%	0.0	Smaller of heat or cooling when loads do not operate simultaneously.
MOTORS AND OTHER NON-CONTINUOUS OR MISCELLANEOUS LOAD:	29.8	100%	29.8	All other loads excluding maximum motor load.
LARGEST MOTOR LOAD:	4.8	125%	5.9	
TOTALS:	40.4	104%	41.9	MINIMUM FEEDER: 116-AMPS

PANEL '21'
208Y/120-VOLT, 3-PHASE, 4-WIRE
225-AMP, MAIN LUGS ONLY
MOUNTING: SURFACE

NOTES: COMMERCIAL BOLT-ON CIRCUIT BREAKER PANELBOARD.
PROVIDE FLOOR TO CEILING REMOVEABLE METAL SKIRTS BY PANEL MFR. IN COLOR TO MATCH PANEL.
PROVIDE ARC FLASH CIRCUIT INTERRUPTER TYPE BREAKERS PER NEC 210.13 AND 210.18.

CKT NO	LOAD DESCRIPTION	REF NO	BRKR TYPE	LOAD AMPS	BREAKER P	BREAKER AMP	PHASE AMPS A	B	C	BREAKER AMP	P	LOAD AMPS	BRKR TYPE	REF NO	LOAD DESCRIPTION	CKT NO
1	LTS- BEDROOMS 205,207,208,SPA			4.8	1	20	9.6			20	1	4.8			LTS- BEDROOMS 213,215,216,221,222	2
3	LTS- SUPPORT ROOMS			3.7	1	20		11.3		20	1	7.6			LTS- DEN, 226-227,228	4
5	LTS- 202, 203			8.3	1	20			15.7	20	1	7.4			LTS- 230, C24	6
7	SPARE				1	20	0.0			20	1				SPARE	8
9	SPARE				1	20		0.0		20	1				SPARE	10
11	SPARE				1	20			0.0	20	1				SPARE	12
13	ICE MELT CABLE-SOUTH DRAINS		GFPE	8.3	1	20	8.3			20	1				SPARE	14
15	ICE MELT CABLE-NORTH DRAINS		GFPE	8.3	1	20		20.3		20	1	12.0			LIKORAIL – RM 226	16
17	ICE MELT CABLE-EAST GUTTERS		GFPE	8.3	1	20			20.3	20	1	12.0			LIKORAIL – RM 227	18
19	ICE MELT CABLE-NORTH GUTTERS		GFPE	8.3	1	20	20.3			20	1	12.0			LIKORAIL – RM 228	20
21	ICE MELT CABLE-WEST GUTTERS		GFPE	8.3	1	20		20.3		20	1	12.0			LIKORAIL – RM 205	22
23	REC-ROOFTOP			9.0	1	20			21.0	20	1	12.0			LIKORAIL – RM 207	24
25	SPARE				1	20	12.0			20	1	12.0			LIKORAIL – RM 208	26
27	SPARE				1	20		12.0		20	1	12.0			LIKORAIL – RM 213	28
29	SPARE				1	20			4.0	20	1	4.0			REC – LAUNDRY/STAFF TOILET/DBF	30
31	REC – BEDROOM 213			10.5	1	20	21.0			20	1	10.5			REC – BEDROOM 208	32
33	REC – BEDROOM 215			10.5	1	20		21.0		20	1	10.5			REC – BEDROOM 207	34
35	REC – BEDROOM 216			10.5	1	20			21.0	20	1	10.5			REC – BEDROOM 205	36
37	REC – BEDROOM 221			10.5	1	20	22.5			20	1	12.0			LIKORAIL – RM 215	38
39	SPARE				1	20		12.0		20	1	12.0			LIKORAIL – RM 216	40
41	SPARE				1	20			12.0	20	1	12.0			LIKORAIL – RM 221	42
	PROJECT #10101 Panels					PANEL TOTALS:	94	97	94						12/01/11	

	ACTUAL KVA	DEMAND FACTOR	DEMAND KVA	
LIGHTING AND OTHER CONTINUOUS LOAD:	4.4	125%	5.5	Excludes track and show window lighting.
TRACK LIGHTING:	0.0	N/A	0.0	Length of Track: 0 ft
SHOW WINDOWS:	0.0	N/A	0.0	Length of show window: 0 ft
RECEPTACLE LOAD:	10.4	98%	10.2	100% of the first 10 kVA, plus 50% over 10 kVA.
KITCHEN EQUIPMENT LOAD:	0.0	100%	0.0	Based on 0 pieces of equipment.
HEATING (COINCIDENTAL) LOAD:	5.0	100%	5.0	Includes space heat in excess of cooling and other electric heat.
HEATING OR OTHER NON-COINCIDENTAL LOAD:	0.0	0%	0.0	Smaller of heat or cooling when loads do not operate simultaneously.
MOTORS AND OTHER NON-CONTINUOUS OR MISCELLANEOUS LOAD:	14.4	100%	14.4	All other loads excluding maximum motor load.
LARGEST MOTOR LOAD:	0.0	125%	0.0	
TOTALS:	34.2	103%	35.1	MINIMUM FEEDER: 97-AMPS

PANEL '22'
208Y/120-VOLT, 3-PHASE, 4-WIRE
225-AMP, MAIN LUGS ONLY
MOUNTING: SURFACE

NOTES: COMMERCIAL BOLT-ON CIRCUIT BREAKER PANELBOARD.
PROVIDE FLOOR TO CEILING REMOVEABLE METAL SKIRTS BY PANEL MFR. IN COLOR TO MATCH PANEL.
PROVIDE ARC FLASH CIRCUIT INTERRUPTER TYPE BREAKERS PER NEC 210.13 AND 210.18.

CKT NO	LOAD DESCRIPTION	REF NO	BRKR TYPE	LOAD AMPS	BREAKER P	BREAKER AMP	PHASE AMPS A	B	C	BREAKER AMP	P	LOAD AMPS	BRKR TYPE	REF NO	LOAD DESCRIPTION	CKT NO
1	REC-BEDROOM 228			10.5	1	20	22.5			20	1	12.0			REFRIGERATOR W/ICE&H20	2
3	REC-BEDROOM 227			10.5	1	20		17.5		20	1	7.0			ICE MACHINE	4
5	REC-BEDROOM 226			10.5	1	20			22.5	20	1	12.0			REFRIGERATOR NO ICE OR H20	6
7	REC-PHAR/CLEAN/SOILED/HAC			7.5	1	20	8.5			20	1	1.0			FIREPLACE	8
9	REC-SPA 209			6.0	1	20		6.0		20	1				SPARE	10
11	REC-PUB TOILET 222			1.5	1	20			1.5	20	1				SPARE	12
13	REC-KITCHEN			4.5	1	20	4.5			20	1				SPARE	14
15	REC-KITCHEN			3.0	1	20		3.0		20	1				SPARE	16
17	SPARE				1	20			15.0	20	2	15.0			FOOD WARMER – CEILING	18
19	REC-DEN 224			6.0	1	20	21.0			**	*	15.0			FOOD WARMER – CEILING	20
21	REC-LIVING 230			7.5	1	20		22.5		20	2	15.0			FOOD WARMER – CEILING	22
23	REC-DINING ROOM 202			6.0	1	20			21.0	**	*	15.0			FOOD WARMER – CEILING	24
25	REC-LIVING ROOM 230			6.0	1	20	18.0			20	1	12.0			WASHING MACHINE	26
27	REC-CORR C24/EXT			7.5	1	20		25.5		30	2	18.0			DRYER	28
29	REC-CORR C22/C23/VEST214/EXT			7.5	1	20			25.5	**	*	18.0			DRYER	30
31	VERNA CARE MACERATOR			4.8	2	20	39.4			50	2	34.6			OVEN	32
33	VERNA CARE MACERATOR			4.8	*	**		39.4		**	*	34.6			OVEN	34
35	HYGIENE SYSTEM BATH			5.8	1	20			43.5	50	2	37.7			STOVE TOP	36
37	TOWEL WARMER			5.0	1	20	42.7			**	*	37.7			STOVE TOP	38
39	MICROWAVE			10.0	1	20		47.7		50	2	37.7			DISH WASHER	40
41	TRASH COMPACTOR			7.2	1	20			44.9	**	*	37.7			DISH WASHER	42
	PROJECT #10101 Panels					PANEL TOTALS:	157	162	174						12/01/11	

	ACTUAL KVA	DEMAND FACTOR	DEMAND KVA	
LIGHTING AND OTHER CONTINUOUS LOAD:	0.0	125%	0.0	Excludes track and show window lighting.
TRACK LIGHTING:	0.0	N/A	0.0	Length of Track: 0 ft
SHOW WINDOWS:	0.0	N/A	0.0	Length of show window: 0 ft
RECEPTACLE LOAD:	11.3	94%	10.7	100% of the first 10 kVA, plus 50% over 10 kVA.
KITCHEN EQUIPMENT LOAD:	39.4	65%	25.6	Based on 10 pieces of equipment.
HEATING (COINCIDENTAL) LOAD:	0.6	100%	0.6	Includes space heat in excess of cooling and other electric heat.
HEATING OR OTHER NON-COINCIDENTAL LOAD:	0.0	0%	0.0	Smaller of heat or cooling when loads do not operate simultaneously.
MOTORS AND OTHER NON-CONTINUOUS OR MISCELLANEOUS LOAD:	7.7	100%	7.7	All other loads excluding maximum motor load.
LARGEST MOTOR LOAD:	0.0	125%	0.0	
TOTALS:	59.1	76%	44.6	MINIMUM FEEDER: 124-AMPS

REVISIONS | DATE

CSHQA

C.W. MOORE PLAZA
250 S. 5TH ST. BOISE, ID 83702
(208) 343-4635 FAX (208) 343-1858
http://www.cshqa.com

AMY K. DOCKTER, P.E.
C.W. MOORE PLAZA
250 S. 5TH ST
BOISE, IDAHO
PHONE: 208-343-4635 FAX: 208-343-1858

THESE DRAWINGS AND SPECIFICATIONS, AS INSTRUMENTS OF SERVICE, ARE AND SHALL REMAIN THE PROPERTY OF THE ARCHITECT / ENGINEER WHETHER THE PROJECT FOR WHICH THEY ARE MADE IS EXECUTED OR NOT. THESE DRAWINGS AND SPECIFICATIONS SHALL NOT BE USED BY ANY PERSON OR ENTITY ON OTHER PROJECTS, FOR ADDITIONS TO THIS PROJECT, OR COMPLETION OF THIS PROJECT WHEN PHASED WITHOUT THE WRITTEN CONSENT OF CSHQA OR ITS AFFILIATES. Copyright ©2011

STAMP
PROFESSIONAL ENGINEER
REGISTERED
9201
12-1-11
STATE OF IDAHO
AMY K. DOCKTER

CAD FILE NAME: 531-319_BE31.DWG
XREF FILE NAME: 531-319_xB_30X42TLBK.DWG

DRAWING TITLE: SINGLE LINE DIAGRAM AND SCHEDULES

APPROVED: CHIEF OF FACILITY MANAGEMENT SERVICE

APPROVED: MEDICAL CENTER DIRECTOR

PROJECT TITLE: BOISE VAMC NEW EXTENDED CARE UNIT BUILDING 'B' CLC

BUILDING NUMBER	CHECKED	DRAWN
122	AKD	CRP

LOCATION: VAMC BOISE, IDAHO

DATE: 12/01/2011
PROJECT NO. 531-319
DRAWING NO. BE3.1
DWG 71 OF 78

DEPARTMENT OF VETERANS AFFAIRS

Username: dpiric
Dec 01, 2011 – 5:40pm
Q:\2010\10101.0\Elec\02_Drawings\531-319_BE3.1.dwg

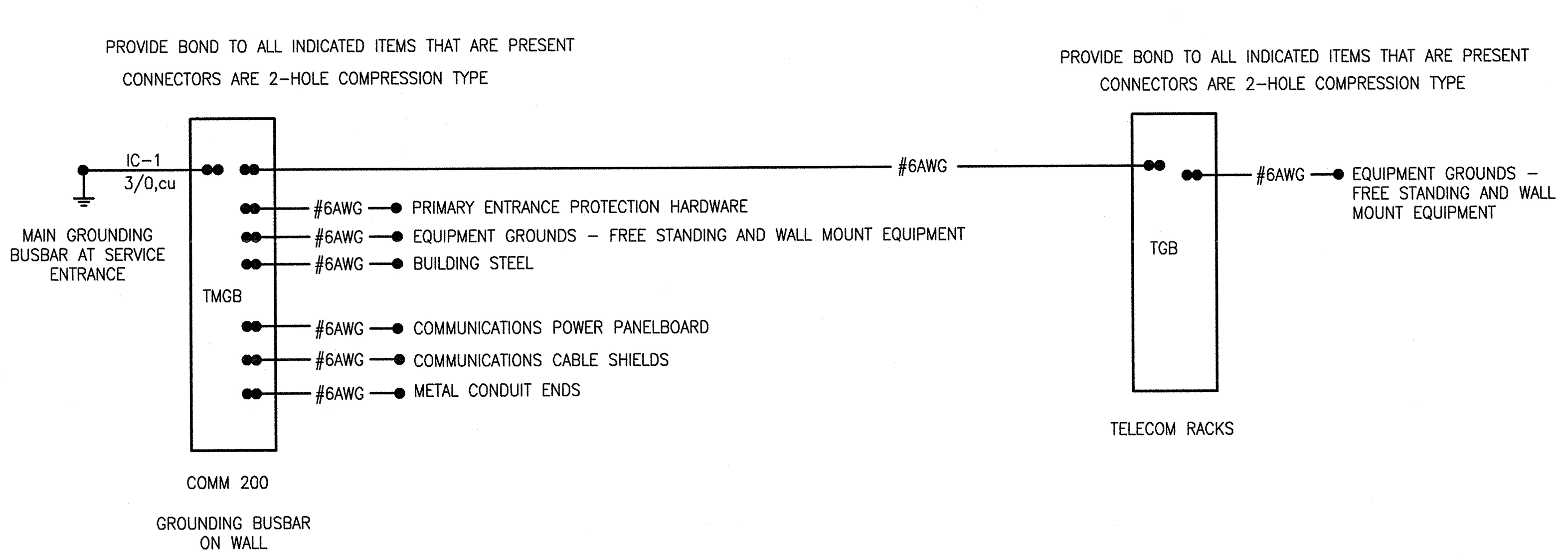

1 TELECOMMUNICATION GROUNDING SCHEMATIC
SCALE NONE

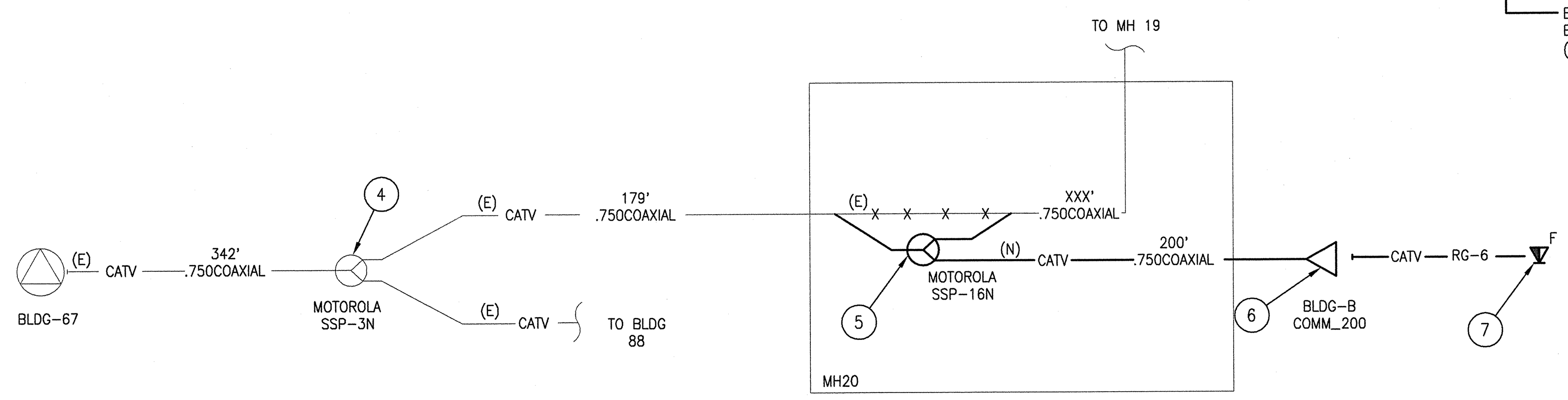

2 MATV SCHEMATIC
SCALE NONE

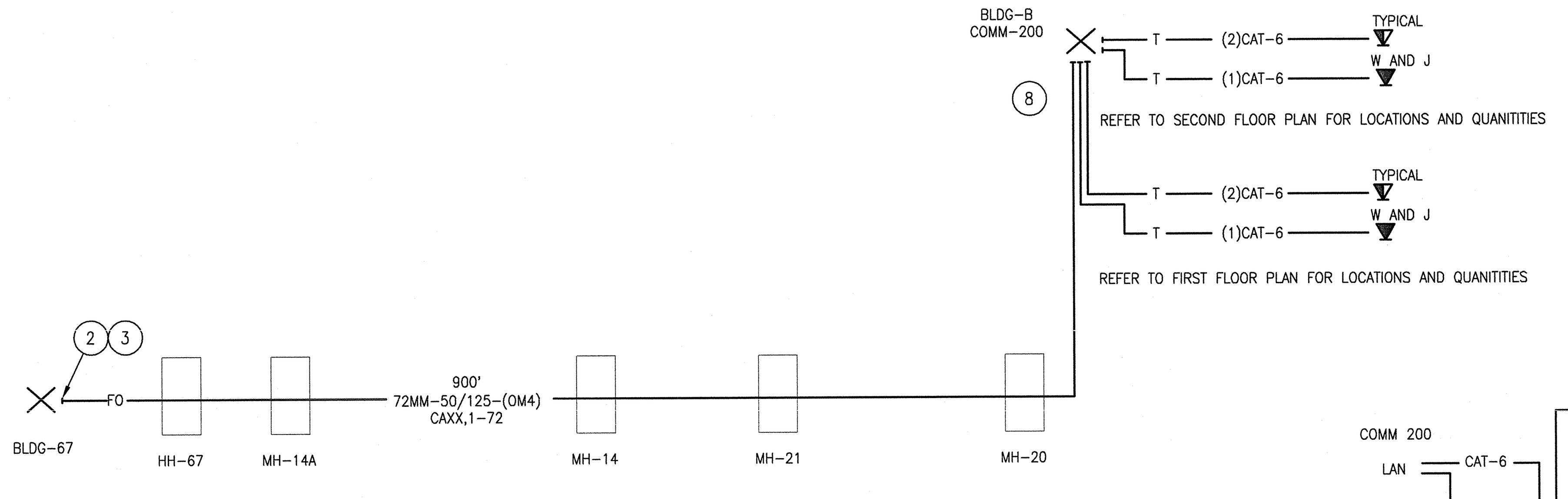

3 TELECOMMUNICATION CABLE SCHEMATIC
SCALE NONE

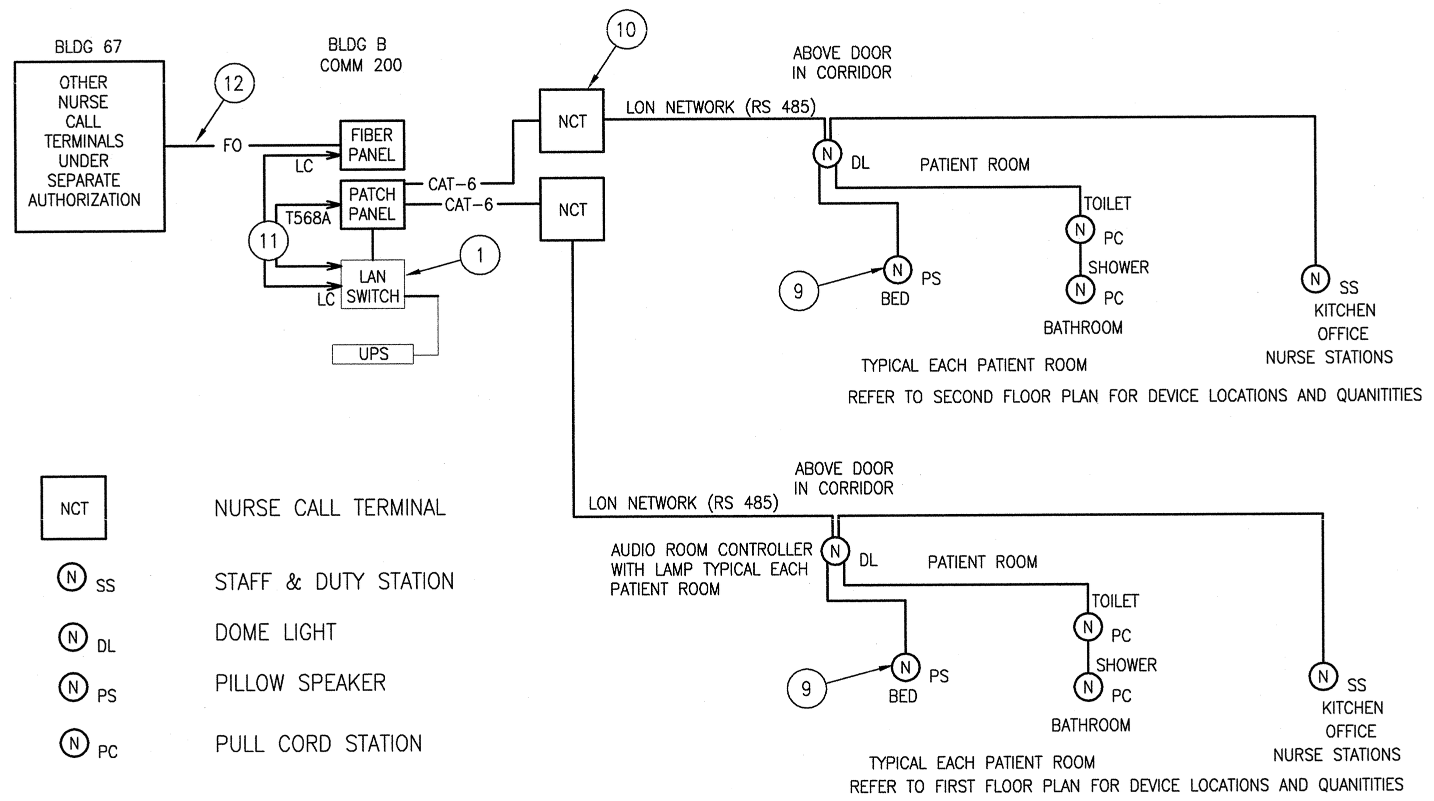

4 NURSE CALL SYSTEM
SCALE NONE

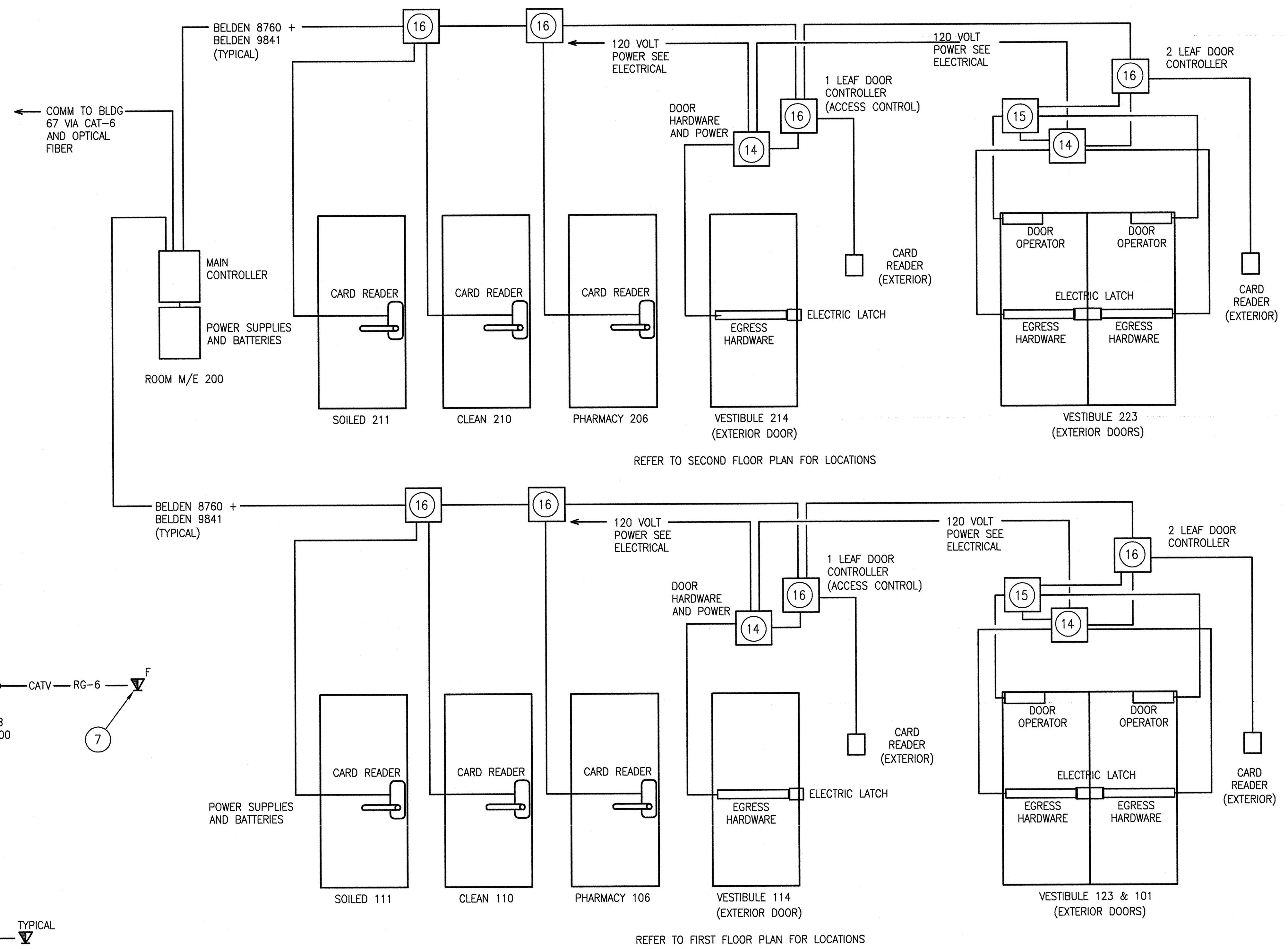

5 ACCESS CONTROL SYSTEM
SCALE NONE

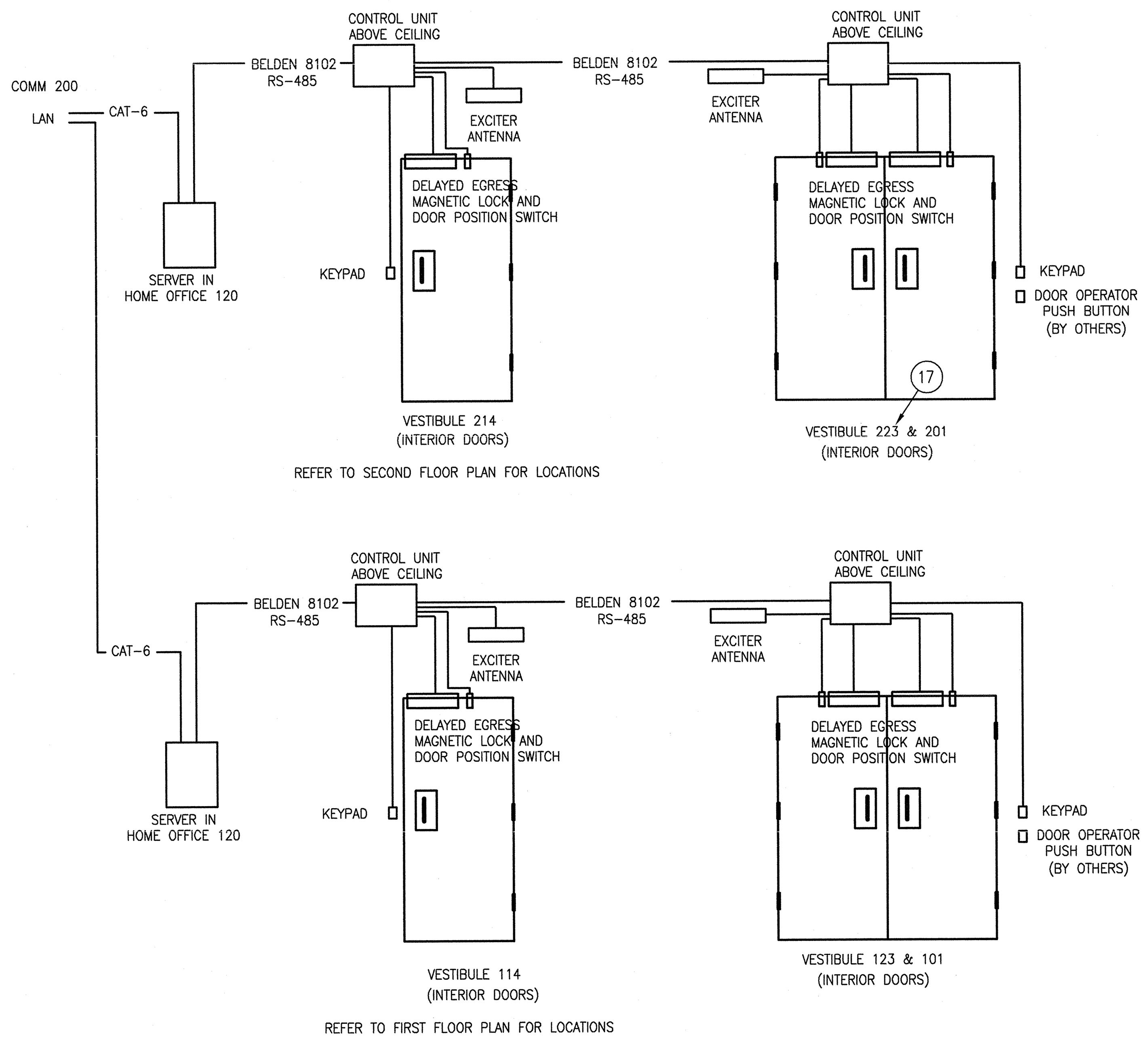

6 PATIENT WANDER PREVENTION SYSTEM
SCALE NONE

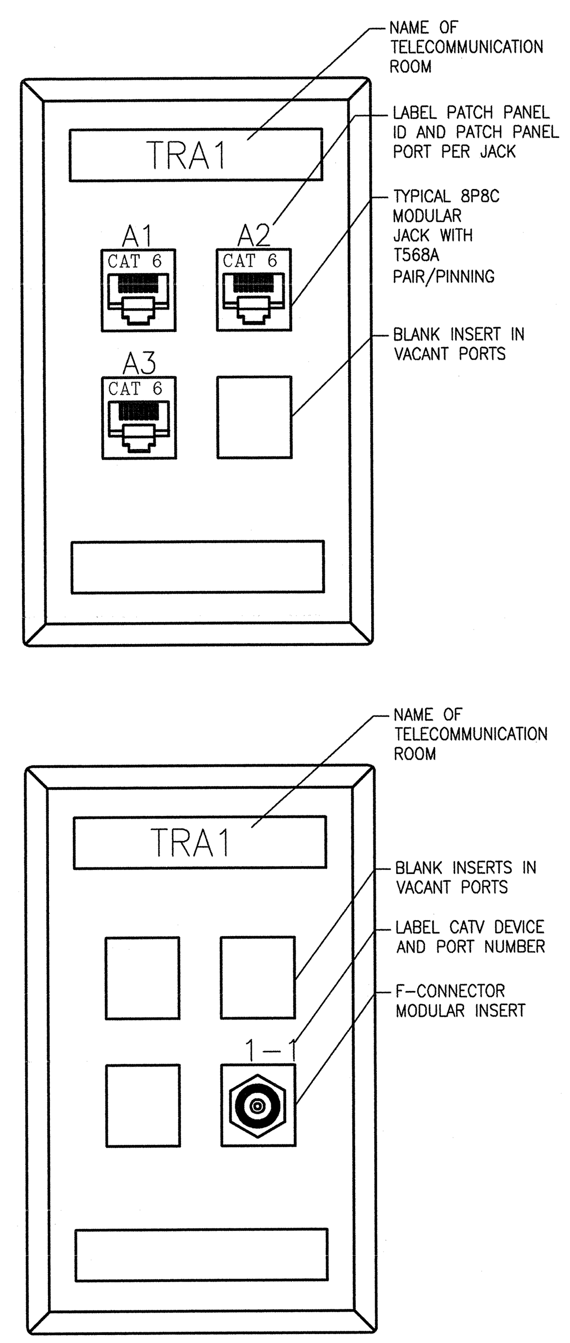

7 TYPICAL OUTLETS
SCALE NONE

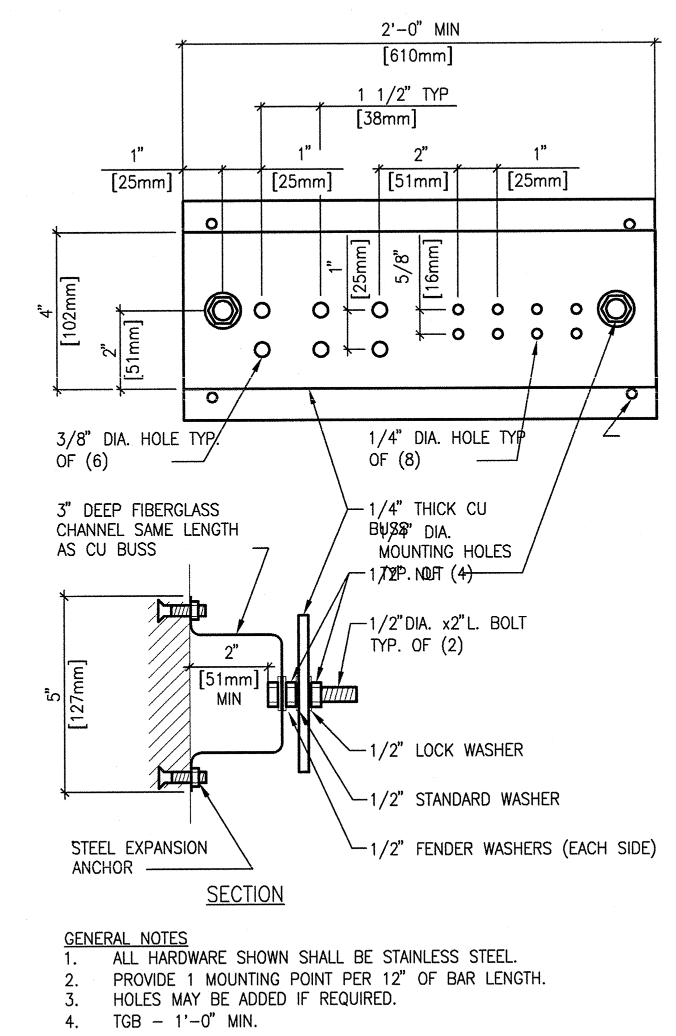

8 TMGB DETAIL
SCALE NONE

GENERAL NOTES:

A. REFER TO DIVISIONS 26, 27 AND 28 OF PROJECT MANUAL FOR RELATED SPECIFICATION SECTIONS.

B. CCTV MEDIA SHALL BE INSTALLED IN CABLE TRAY WITH OTHER SIMILAR MEDIA. ACCESS CONTROL SHALL BE INSTALLED IN DEDICATED CONDUIT.

C. OWNER SHALL PROVIDE TELEPHONE DEVICES, LINE CORDS, PATCH CORDS AND ACTIVATION OF VOICE SYSTEM.

D. OWNER SHALL PROVIDE DATA DEVICES, NETWORK SWITCHES, PATCH CORDS, EQUIPMENT CABLES AND ACTIVATION OF DATA NETWORK.

E. REFER TO FLOOR PLANS FOR LOCATIONS AND QUANTITIES.

F. THIS DRAWINGS INCLUDES SEVERAL LOW VOLTAGE ELECTRICAL CABLING SYSTEMS TO BE PROVIDED UNDER THE ELECTRICAL SCOPE OF WORK. MASTER ANTENNA TELEVISION (MATV), ACCESS CONTROL, VOICE/DATA, PATIENT WANDER PROTECTION, NURSE CALL AND TELECOMMUNICATIONS BONDING AND GROUNDING.

G. THE MATV SYSTEM INCLUDES DIRECTIONAL TAPS AND CABLE FROM THE UNDERGROUND CONDUIT SYSTEM INTO THE BUILDING, A MULTIUSER AMPLIFIER AND DROP CABLES TO THE TELEVISION LOCATIONS. TELEVISIONS ARE OWNER PROVIDED. RE: BE3.2-2.

H. THE ACCESS CONTROL SYSTEM INCLUDES DOOR CONTROLLERS CENTRALIZED IN THE TELECOMMUNICATION SPACE, POWER SUPPLIES, CABLING, DOOR CONTACTS, CARD READERS, REQUEST TO EXIT, MAGNETIC LOCKS AND CONNECTIVITY TO THE EXISTING MONITORING STATION. COORDINATE WITH DOOR HARDWARE RE: BA6.2 AND BE3.2-5

I. THE VOICE/DATA SYSTEM IN INCLUDES OPTICAL FIBER CABLE FROM BUILDING 67, CATEGORY 6 HORIZONTAL CABLING, TELECOMMUNICATION OUTLET LOCATIONS TO SUPPORT PHONE, COMPUTERS, WIRELESS DEVICES, DISTRIBUTED ANTENNA SYSTEM (DAS) AND OTHER UTILITY REMOTE CONTROLS AND MONITORING. RE: BA3.2-3.

J. THE PATIENT WANDER PROTECTION SYSTEM INCLUDES SENSORS ON EXTERIOR DOORS, WIRING, ANTENNAS, CONTROL STATIONS AND PATIENT-WORN DETECTABLE DEVICES. RE: BA3.2-6.

K. THE NURSE CALL SYSTEM INCLUDES A CONTROLLER IN THE TELECOMMUNICATION SPACE, DOME LIGHTS ROOM CONTROLLERS IN THE CORRIDORS, SINGLE PATIENT STATIONS IN THE MONITORED ROOMS, SPEAKER PILLOWS IN THE PATIENT BEDS, EMERGENCY PULL CORDS IN THE BATHROOMS, STAFF STATIONS IN THE KITCHEN AND OFFICE AND CONNECTIVITY TO THE MASTER NURSE STATION AND SIMILAR SYSTEM IN OTHER BUILDINGS VIA OPTICAL FIBER. RE: BE3.2-4.

L. THE TELECOMMUNICATIONS GROUNDING SYSTEM INCLUDES THE TELECOMMUNICATIONS MAIN GROUNDING BUSBAR IN THE TELECOMMUNICATIONS SPACE, A 3/0 BONDING CONDUCTOR TO THE ELECTRICAL SERVICE ENTRANCE GROUNDING ELECTRODE, #6 BONDING CONDUCTORS TO TELECOMMUNICATION BUSBARS AND BONDING CONDUCTORS TO METALLIC CONDUITS, CABLE TRAYS AND OTHER LOW VOLTAGE ELECTRICAL SYSTEM GROUND LUGS. RE: 3.2-1 AND -8.

SHEET NOTES:

1. BY OWNER.
2. PROVIDE PATCH CORDS AS REQUIRED TO EXTEND NEW SYSTEMS TO OTHER BUILDINGS AND EXISTING SYSTEMS.
3. PROVIDE PATCH CORDS FOR MONITORING, SECURITY AND LIFE SAFETY SYSTEMS ONLY. VIDEO SURVEILLANCE, DATA AND VOICE CONNECTIVITY PROVIDED BY OWNER.
4. EXISTING MOTOROLA SSP-3N SPLITTER IN SIGNAL VAULT MH21.
5. NEW MOTOROLA SSP-16N SPLITTER CUT INTO EXISTING CABLE. CONNECT EXISTING CABLE TO IN PORT AND LOW LOSS OUT PORT AS SHOWN. CONNECT NEW CABLE TO HIGH LOSS PORT.
6. NEW MULTI PORT BUILDING AMPLIFIER.
7. STRUCTURED CABLING OUTLET WITH F-CONNECTOR MODULE. RG-6 CABLE HOME RUN TO AMPLIFIER. SEE PLANS FOR LOCATIONS.
8. TERMINATE 12 STRANDS (BLUE BUFFER TUBE) OF NEW 72 STRAND CABLE FROM BLDG 67 ON LC CONNECTORS. PROVIDE 6 SPLICE TRAYS IN NEW ENCLOSURE AND ROUTE REMAINING 6 BUFFER TUBES TO INDIVIDUAL SPLICE TRAYS FOR SPLICING BY OTHERS. WORK BY OTHERS WILL INCLUDE CABLES TO IMAGING BUILDING AND SERVICE TO BUILDING 88.
9. PILLOW SPEAKER TO PROVIDE NURSE CALL, ROOM LIGHT CONTROL, TELEVISION V CONTROL AND TELEVISION SOUND TO PATIENT'S BED.
10. WALL MOUNT NURSE CALL TERMINAL CABINET WITH POWER SUPPLY. TERMINATE SEGMENT CABLES AND LABEL THE INSTALLATION.
11. PROVIDE PATCH CORDS TO CONNECT TO BUILDING B NURSE CALL SYSTEM TO NURSE CALL SYSTEM IN BUILDING 67 VIA 50 MICRON MULTIMODE FIBER.
12. OPTICAL FIBER TO BUILDING. RE: SDE3.2-3.
13. NO NOTE PROVIDED.
14. POWER SUPPLY AND ELECTRICAL POWER FOR DOOR HARDWARE.
15. DOOR OPERATOR MOTOR CONTROLS.
16. ACCESS CONTROL DOOR CONTROLLER AND POWER SUPPLY
17. WORK ON VESTIBULE 223 DEPENDS ON STATUS OF BID OPTION 3.

REVISIONS	DATE

CSHQA
C.W. MOORE PLAZA
250 S. 5TH ST. BOISE, ID 83702
(208) 343-4635 FAX (208) 343-1858
http://www.cshqa.com

AMY K. DOCKTER, P.E.
C.W. MOORE PLAZA
250 S. 5TH ST
BOISE, IDAHO
PHONE: 208-343-4635 FAX: 208-343-1858

THESE DRAWINGS AND SPECIFICATIONS, AS INSTRUMENTS OF SERVICE, ARE AND SHALL REMAIN THE PROPERTY OF THE ARCHITECT / ENGINEER WHETHER THE PROJECT FOR WHICH THEY ARE MADE IS EXECUTED OR NOT. THESE DRAWINGS AND SPECIFICATIONS SHALL NOT BE USED BY ANY PERSON OR ENTITY ON OTHER PROJECTS, FOR ADDITIONS TO THIS PROJECT, OR COMPLETION OF THIS PROJECT-WHEN PHASED-WITHOUT THE WRITTEN CONSENT OF CSHQA OR ITS AFFILIATES. Copyright ©2011

STAMP
PROFESSIONAL ENGINEER — REGISTERED — 9201 — 12-1-11 — STATE OF IDAHO — AMY K. DOCKTER

CAD FILE NAME: 531-319_BE3.2.DWG
XREF FILE NAME: 531-319_xA_30X42TLBK.DWG

DRAWING TITLE	PROJECT TITLE	DATE
TELECOMMUNICATION SCHEMATICS	BOISE VAMC NEW EXTENDED CARE UNIT BUILDING 'B' CLC	12/01/2011
APPROVED: CHIEF OF FACILITY MANAGEMENT SERVICE	BUILDING NUMBER 122 / CHECKED AKD / DRAWN JDR	PROJECT NO. 531-319
APPROVED: MEDICAL CENTER DIRECTOR	LOCATION VAMC BOISE, IDAHO	DRAWING NO. BE3.2 — DWG 72 OF 78

DEPARTMENT OF VETERANS AFFAIRS

Username: jromlein
Dec 01, 2011 – 1:49pm
Q:\2010\10101.0\ComEng\02_Drawings\531-319_BE3.2.dwg

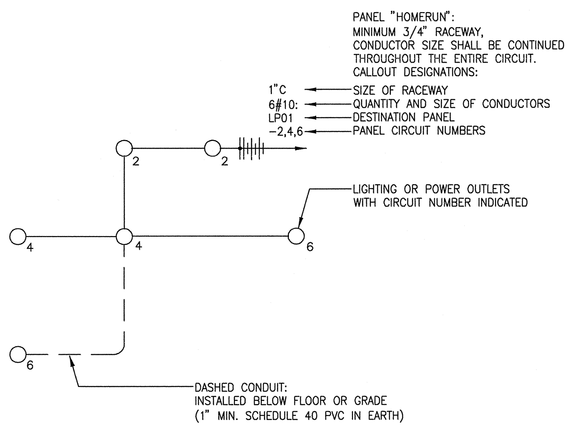

NOTES:
1. ALL HOMERUNS ARE TO BE 3/4" CONDUIT MINIMUM.
2. ALL CONDUCTORS SHALL BE #12 UNLESS OTHERWISE NOTED.
3. ALL CONDUITS SHALL CONTAIN A GROUND CONDUCTOR SIZED PER NEC.
4. NO EDISON CIRCUITS ALLOWED.

1 CIRCUITING SYMBOLS
SCALE NONE

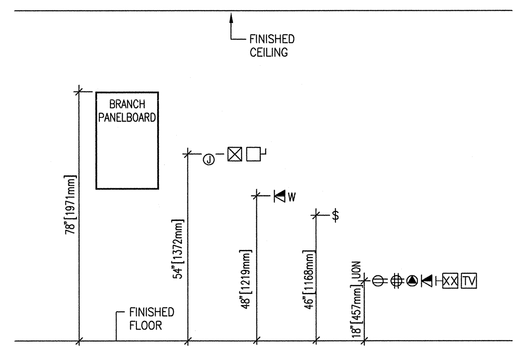

NOTES:
1. VERIFY ALL MOUNTING HEIGHTS WITH CABO/ANSI A117.1, U.F.A.S. REQUIREMENTS AND ALL OTHER APPLICABLE CODES.
2. COORDINATE MOUNTING HEIGHTS WITH ALL ARCHITECTURAL PLANS, ELEVATIONS AND DETAILS PRIOR TO ROUGH-IN. INFORM ARCHITECT OF ANY CONFLICTS.

2 STANDARD MOUNTING HEIGHTS
SCALE NONE

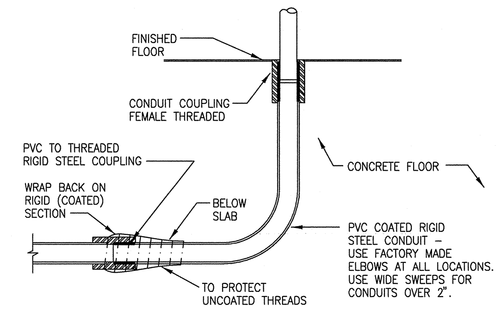

3 BELOW GRADE CONDUIT
SCALE NONE

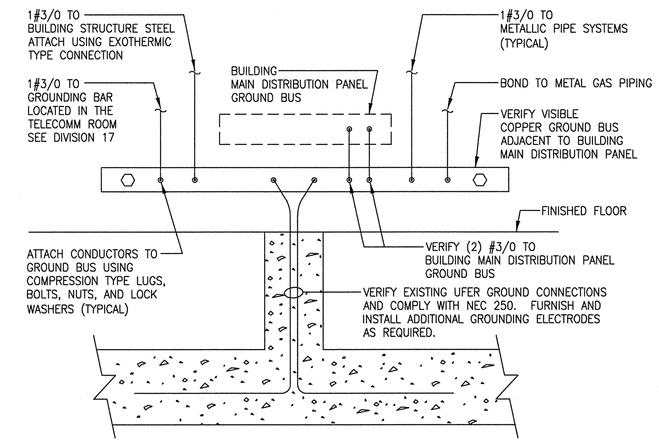

NOTES:
1. ALL GROUNDING AND BONDING CONDUCTORS SHALL BE IN ACCORDANCE WITH NEC 250.

4 GROUNDING DETAIL
SCALE NONE

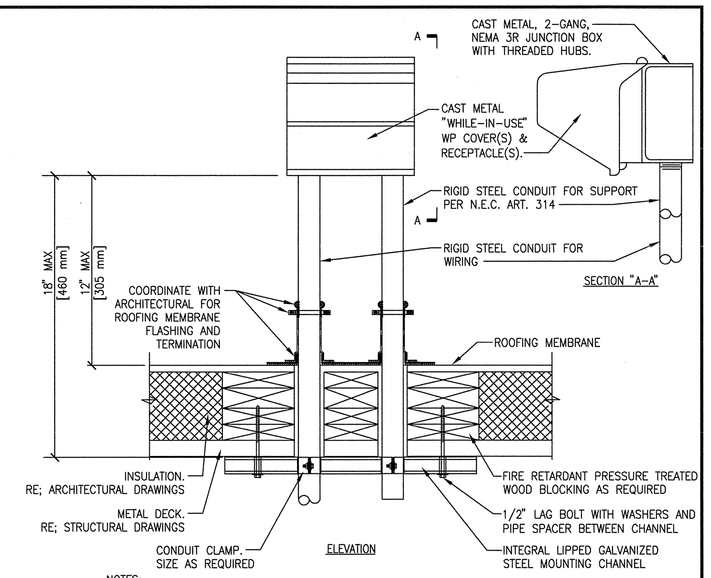

NOTES:
1. MAINTAIN A MINIMUM CLEARANCE OF 12" [308mm] ON ALL SIDES OF ROOF PENETRATION FROM WALLS, CURBS, AND OTHER PROJECTIONS TO FACILITATE PROPER FLASHING.
2. FLANGES OF ADJACENT FLASHINGS SHALL NOT BE CUT OR OVERLAPPED.
3. VERIFY ROOF & STRUCTURAL SYSTEM WITH ARCHITECT.
4. COORDINATE FLASHING INSTALLATION WITH ROOFING CONTRACTOR TO ENSURE PROPER METHODS & MATERIALS ARE USED TO MAINTAIN ROOF WARRANTY.

5 ROOF PENETRATION AND RECEPTACLE DETAIL
SCALE NONE

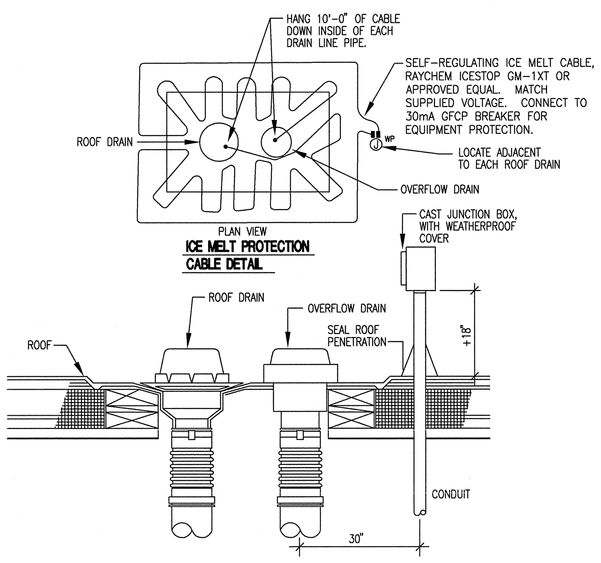

6 ROOF DRAIN ICE MELT CABLE
SCALE NONE

7 NOT USED
SCALE NONE

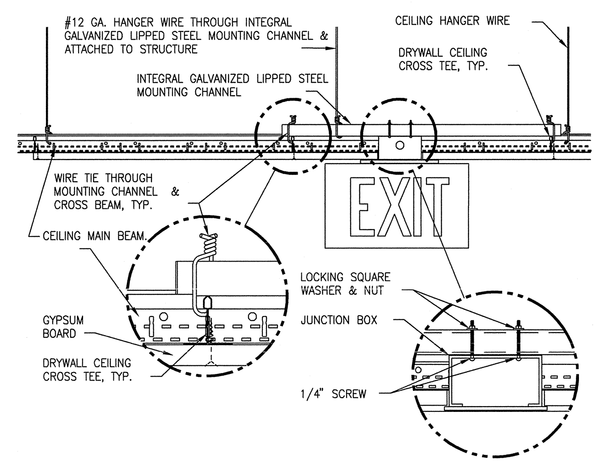

8 EXIT SIGN MOUNTING–GYPBOARD HARD CEILING
SCALE NONE

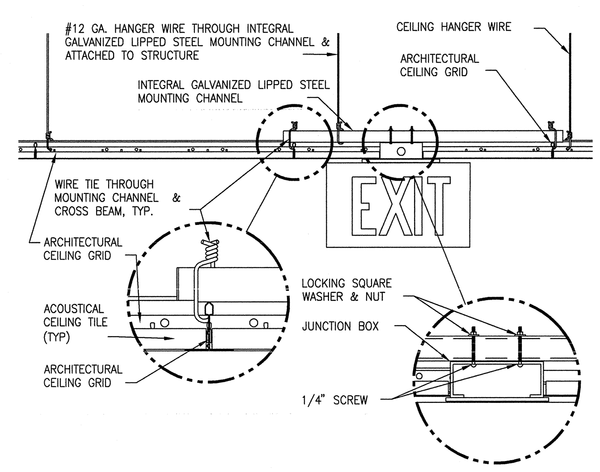

9 EXIT SIGN MOUNTING – LAY–IN CEILING
SCALE NONE

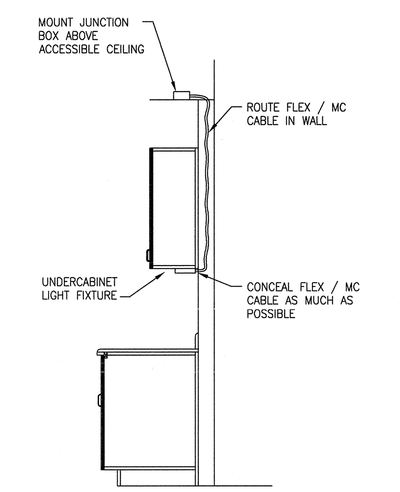

10 UNDERCABINET LIGHT FIXTURE MOUNTING DETAIL
SCALE NONE

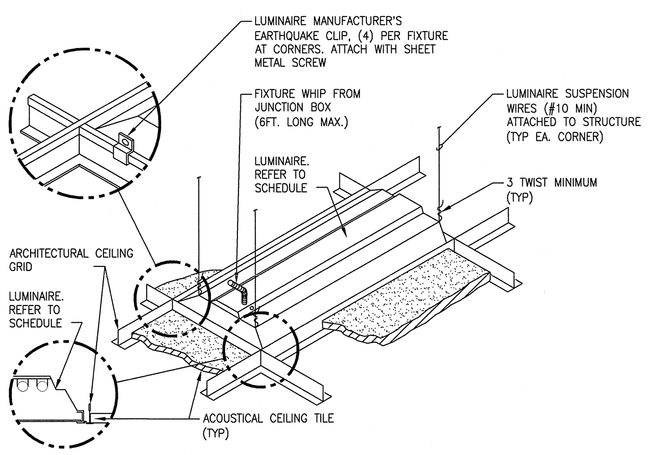

11 LUMINAIRE MOUNTING – LAY–IN CEILING
SCALE NONE

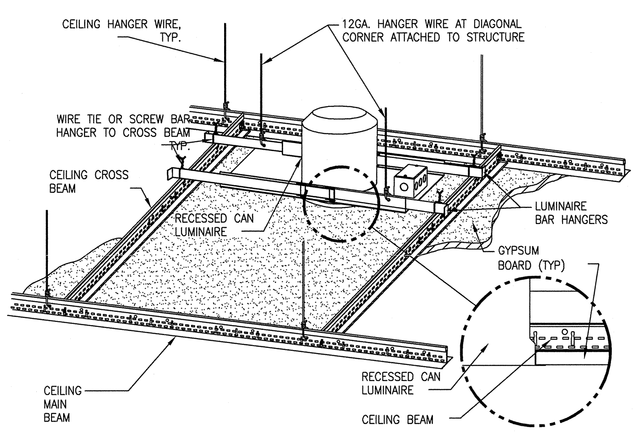

12 DOWNLIGHT MOUNTING – GYPBOARD HARD CEILING
SCALE NONE

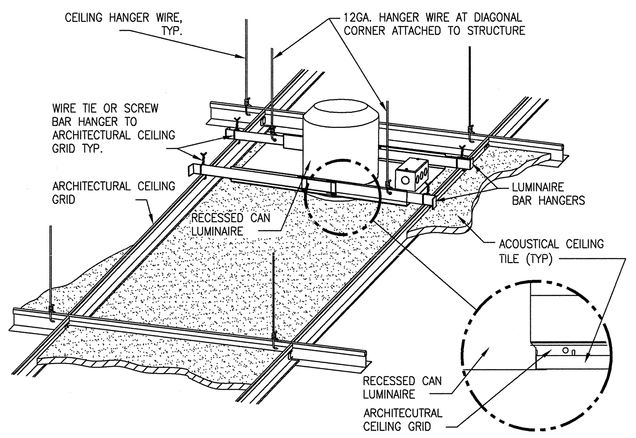

13 DOWNLIGHT MOUNTING – LAY–IN CEILING
SCALE NONE

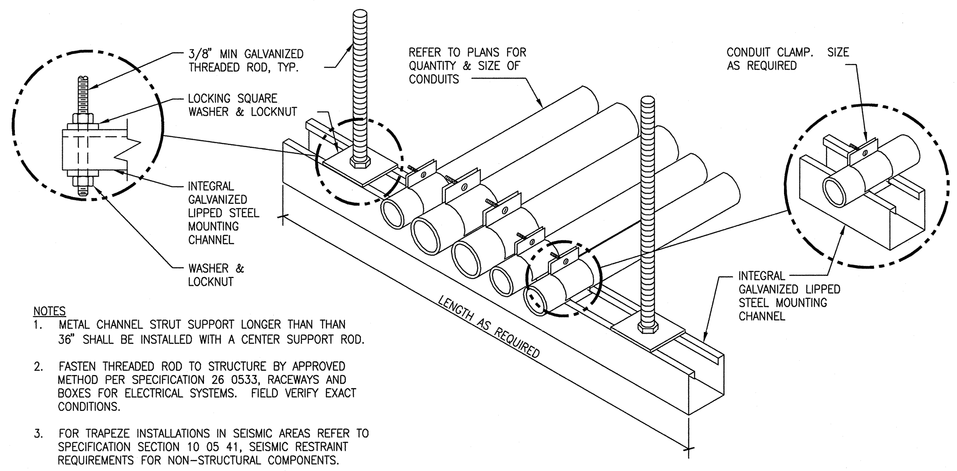

NOTES
1. METAL CHANNEL STRUT SUPPORT LONGER THAN THAN 36" SHALL BE INSTALLED WITH A CENTER SUPPORT ROD.
2. FASTEN THREADED ROD TO STRUCTURE BY APPROVED METHOD PER SPECIFICATION 26 0533, RACEWAYS AND BOXES FOR ELECTRICAL SYSTEMS. FIELD VERIFY EXACT CONDITIONS.
3. FOR TRAPEZE INSTALLATIONS IN SEISMIC AREAS REFER TO SPECIFICATION SECTION 10 05 41, SEISMIC RESTRAINT REQUIREMENTS FOR NON-STRUCTURAL COMPONENTS.

14 CONDUIT TRAPEZE MOUNTING DETAIL
SCALE NONE

REVISIONS	DATE

CSHQA
C.W. MOORE PLAZA
250 S. 5TH ST. BOISE, ID 83702
(208) 343-4635 FAX (208) 343-1858
http://www.cshqa.com

AMY K. DOCKTER, P.E.
C.W. MOORE PLAZA
250 S. 5TH ST
BOISE, IDAHO
PHONE: 208-343-4635 FAX: 208-343-1858

THESE DRAWINGS AND SPECIFICATIONS, AS INSTRUMENTS OF SERVICE, ARE AND SHALL REMAIN THE PROPERTY OF THE ARCHITECT / ENGINEER WHETHER THE PROJECT FOR WHICH THEY ARE MADE IS EXECUTED OR NOT. THEY ARE NOT TO BE USED BY OTHERS EXCEPT WITH THE OWNER'S AND ARCHITECT'S WRITTEN CONSENT. THEY ARE NOT TO BE USED BY ANY PERSON OR ENTITY ON OTHER PROJECTS, FOR ADDITIONS TO THIS PROJECT, OR COMPLETION OF THIS PROJECT WHEN PHASED WITHOUT THE WRITTEN CONSENT OF CSHQA OR ITS AFFILIATES. Copyright ©2011

STAMP
PROFESSIONAL ENGINEER REGISTERED 12-1-11 STATE OF IDAHO AMY K. DOCKTER

CAD FILE NAME: 531-313_BE4.1.DWG
XREF FILE NAME: 531-319_xA_30X42TLBK.DWG

DRAWING TITLE: ELECTRICAL DETAILS
APPROVED: CHIEF OF FACILITY MANAGEMENT SERVICE
APPROVED: MEDICAL CENTER DIRECTOR

PROJECT TITLE: BOISE VAMC NEW EXTENDED CARE UNIT BUILDING 'B' CLC
BUILDING NUMBER: 122
CHECKED: AKD
DRAWN: CRP
LOCATION: VAMC BOISE, IDAHO

DATE: 12/01/2011
PROJECT NO. 531-319
DRAWING NO. BE4.1
DWG 73 OF 78

DEPARTMENT OF VETERANS AFFAIRS

Username: dpirc
Dec 01, 2011 – 5:40pm
Q:\2010\10101.d\Elec\02_Drawings\531-319_BE4.1.dwg

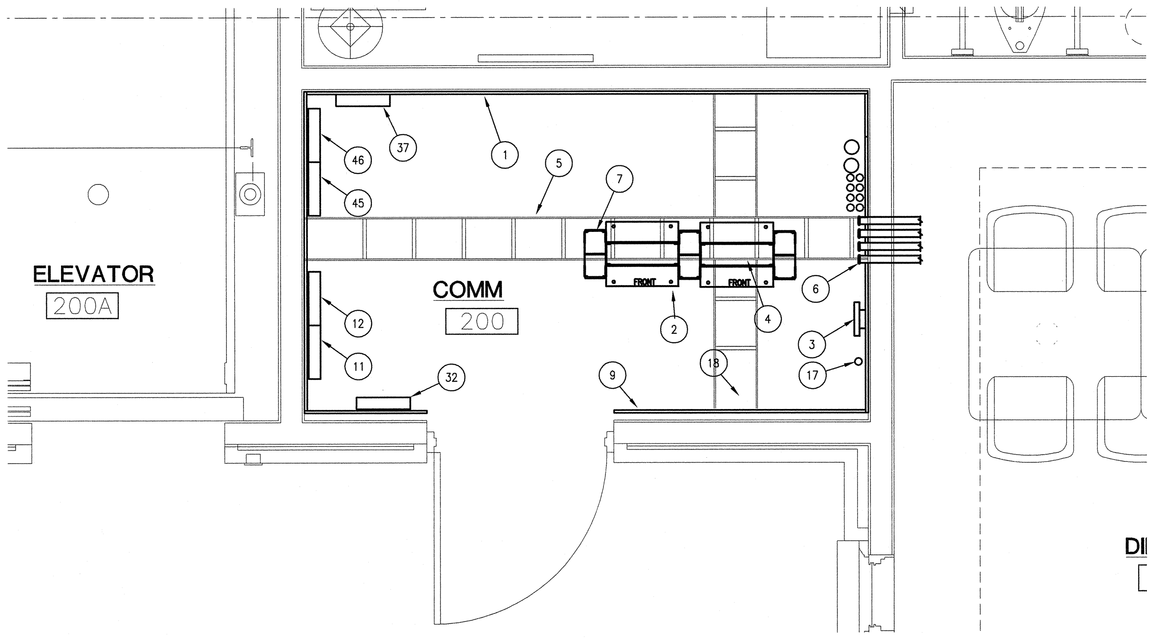

1 COMM 200 PLAN

0' 3" 6" 9" 12" 15" 18"

SCALE: 1/2 "=1'-0"

PROJECT NORTH

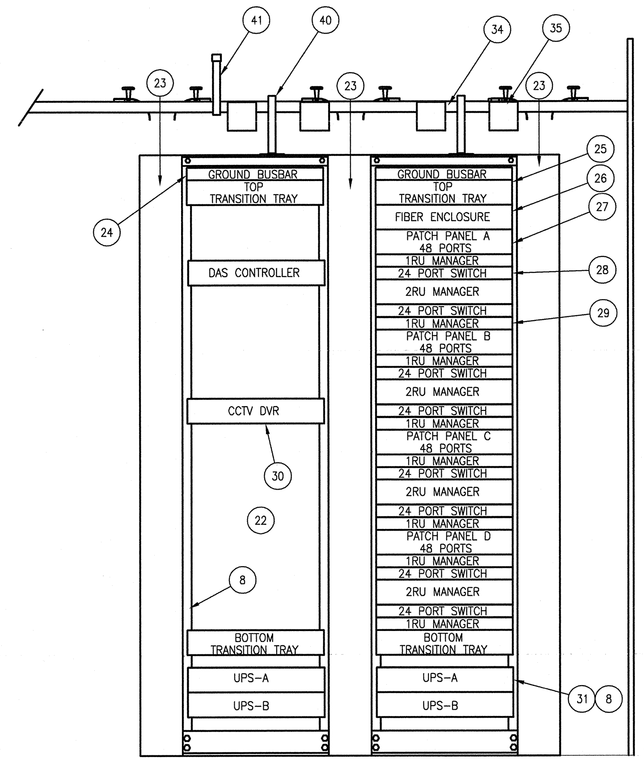

3 COMM 200 RACK ELEVATION

0' 6" 1' 1'-6" 2' 2'-6" 3'

SCALE: 1"=1'-0"

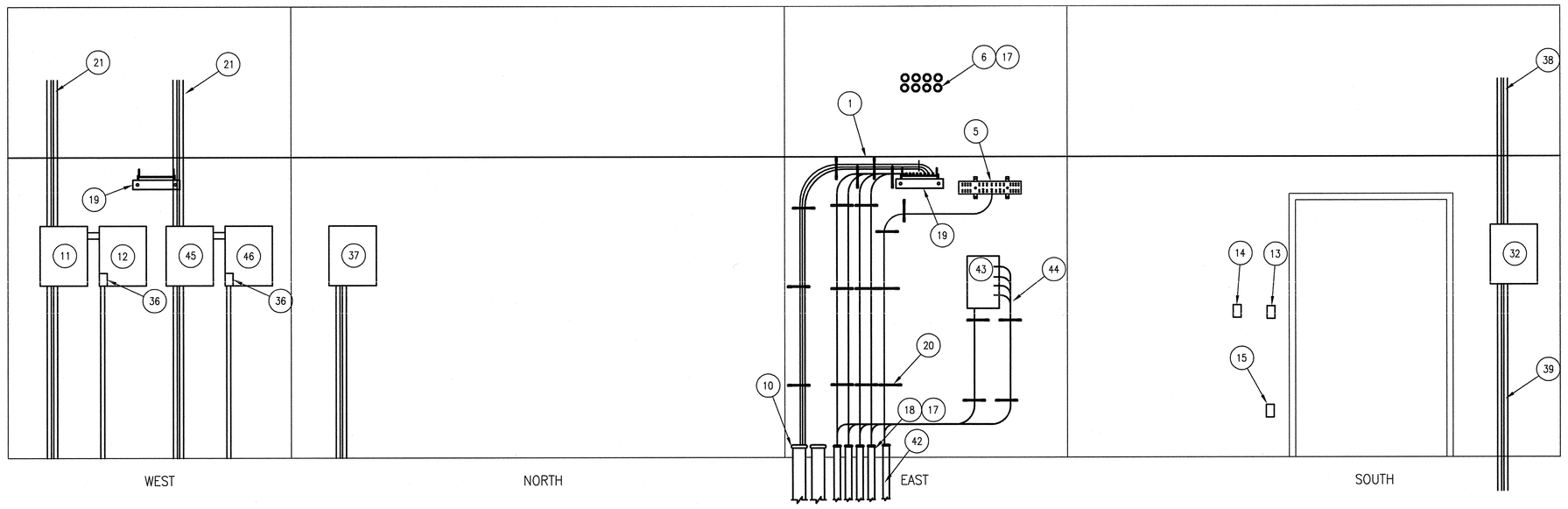

2 COMM. 200 WALL ELEVATIONS

0' 3" 6" 9" 12" 15" 18"

SCALE: 1/2 "=1'-0"

GENERAL NOTES:

A. THIS IS THE ONLY TELECOMMUNICATIONS ROOM FOR INFORMATION TECHNOLOGY AND SECURITY.

B. FIRESTOP WALL PENETRATIONS AFTER INSTALLATION OF PATHWAY. FIRESTOP CONDUIT SLEEVES AFTER AFTER INSTALLATION OF CABLES.

C. COORDINATE WITH ARCHITECTURAL, MECHANICAL, ELECTRICAL, AND FIRE SAFETY WORK TO AVOID CONFLICTS. DO NOT BEGIN INSTALLATION OF TELECOMMUNICATIONS HARDWARE UNTIL DOOR IS INSTALLED AND SPACE IS PAINTED.

D. REFER TO SHEET E3.5 FOR SCHEMATIC OF BONDING AND GROUNDING REQUIREMENTS OF TMGB. REFER TO SHEET E4.2 FOR LOCATION OF TMGB.

SHEET NOTES:

1. PLYWOOD WALL FINISH AS SHOWN, COORDINATE WITH ARCHITECTURAL WALL TYPES. WALLS ARE TO BE PAINTED PRIOR TO MOUNTING HARDWARE ON PLYWOOD.
2. PROVIDE 7'-0" EIA 19" EQUIPMENT RACKS (CPI 46353-703) WITH VERTICAL CABLE MANAGERS (CPI 30165-703) AND BOLT TO CONCRETE FLOOR WITH MANUFACTURE'S FITTINGS (CPI 40604-003). COORDINATE WITH FLOOR FINISH.
3. TELECOMMUNICATIONS MAIN GROUNDING BUSBAR (CPI 40153-020). INSTALL AT 7'-0" A.F.F. RE: BE3.2-1.
4. TWO OUTLET BOXES ABOVE EACH EQUIPMENT RACK TO SUPPORT UPS UNITS. REFER TO RACK ELEVATION DETAIL AND ELECTRICAL DRAWINGS. FASTEN TO STRINGER OF LADDER STYLE CABLE RACK.
5. PROVIDE ALTERNATE SPACE CABLE RUNWAY (CPI 31472-712) AS SHOWN. SUPPORT CABLES ON RACK WITH 6" BOLT-ON CABLE RETAINING POSTS ON BOTH SIDES AT EVERY OTHER RUNG (MIN).
6. 8-2" CONDUITS FOR SECOND FLOOR LOW VOLTAGE CABLING.
7. ROUTE CABLES TO TERMINATION HARDWARE DOWN REAR CHANNEL OF CABLE MANAGER.
8. ROUTE POWER CONDUCTORS ON INTERIOR OF CHANNELS.
9. FLUSH MOUNTED LIGHT SWITCH AND WALL MOUNT TELEPHONE FACEPLATE. COORDINATE WITH PLYWOOD INSTALLATION.
10. 2-4" CONDUITS TO MH20 WITH OPTICAL FIBER CABLES AND INNERDUCT. RE: SDE2.1-6 AND BE3.2-2 AND -3.
11. PROVIDE WALL-MOUNT BUILDING ACCESS CONTROL ENCLOSURE AND TERMINATE FIRST AND SECOND FLOOR DEVICE CABLES. PROVIDE PATCH CABLE AND TRANSCEIVERS FOR OPTICAL FIBER CONNECTION TO EXISTING CAMPUS CONTROL CENTER IN BUILDING 67. PROVIDE GROUND CONDUCTOR TO TMGB.
12. PROVIDE WALL-MOUNT POWER SUPPLY WITH BATTERIES AND ELECTRICAL RECEPTACLE INSIDE ENCLOSURE FOR BUILDING ACCESS CONTROL POWER.
13. LIGHT SWITCH.
14. WALL-MOUNT TELEPHONE FACEPLATE.
15. CONVENIENCE OUTLET.
16. 1-2" CONDUIT FOR BONDING CONDUCTOR TO ELECTRICAL SERVICE ENTRANCE. BOND BOTH ENDS OF CONDUIT TO GROUND.
17. BOND CONDUITS TO TMGB. FIRE STOP WALL PENETRATION. FIRE STOP CONDUIT ENDS FOLLOWING CABLE INSTALLATION.
18. 8-2" CONDUITS FOR FIRST FLOOR LOW VOLTAGE CABLING.
19. SUPPORT CABLE RACK ON WALLS WITH WALL ANGLE BRACKET AND J-HOOKS (CPI 11421-712).
20. SUPPORT CABLES ON PLYWOOD WITH METAL D-RINGS AND VELCRO CABLE MANAGEMENT STRAPS.
21. SURFACE MOUNT ACCESS CONTROL CONDUITS. DO NOT PAINT CONDUITS OR ENCLOSURE.
22. NEW EQUIPMENT RACKS.
23. ALIGN VERTICAL CABLE MANAGEMENT WITH RADIUS CONTROL FITTINGS.
24. PROVIDE RACK MOUNT GROUNDING BUSBAR (CPI 10610-019 OR EQUAL).
25. PROVIDE TRANSITION PANEL (CPI 12183-719 OR EQUAL).
26. PROVIDE CORNING PCH-02U WITH SLICE TRAY BRACKET AND 6 SPLICE TRAYS FOR 12 STRANDS EACH. PROVIDE 1 CONNECTOR PANEL FOR 50 MICRON (OM4) MULTIMODE FIBER WITH LC CONNECTORS. TERMINATE 12 STRANDS (BLUE BUFFER TUBE), TEST AND LABEL THE INSTALLATION. ROUTE 6 UNTERMINATED BUFFER TUBES TO INDIVIDUAL SPLICE TRAYS AND COIL BUFFER TUB FOR SPLICING BY OTHERS.
27. PROVIDE CAT-6 ANGLED PATCH PANEL FOR UTP CABLE TERMINATIONS. TERMINATE HORIZONTAL CABLES, TEST AND LABEL THE INSTALLATION.
28. OWNER FURNISHED AND INSTALLED NETWORK SWITCHES.
29. PROVIDE HORIZONTAL CABLE MANAGERS (CPI 30330-719 AND 30339-719 OR EQUAL).
30. SPACE RESERVED FRO VIDEO SURVEILLANCE RECORDER PROVIDED BY OWNER UNDER SEPARATE AUTHORIZATION.
31. PROVIDE 3000VA UPS UNITS (APC SMARTUPS 3000VA WITH 10' LONG, 30 AMP 208V INPUT CORD) AS SHOWN AND ENERGIZE FROM CIRCUITS ON TOP OF EQUIPMENT RACK. ROUTE POWER CABLE WITH L5-30P CONNECTOR UP INTERIOR OF EQUIPMENT RACK CHANNEL AND SUPPORT WITH RACK CHANNEL CABLE CLIPS (CPI 11225-001) AT 12 INCH INTERVALS.
32. NURSE CALL EQUIPMENT CABINET. TERMINATE LON NETWORK CABLING AND PROVIDE CONNECTION TO OTHER NURSE CALL STAR WIRING HUBS IN OTHER BUILDING VIA OPTICAL FIBER. RE: BE3.2-5
33. CABLE RUNWAY ELEVATION KIT (CPI 10509-006 OR EQUAL)
34. L6-30R, 208V RECEPTACLE FOR UPS A. COORDINATE WITH ELECTRICAL.
35. L6-30R, 208V RECEPTACLE FOR UPS B. COORDINATE WITH ELECTRICAL.
36. DEDICATED POWER CIRCUIT IN ACCESS CONTROL POWER SUPPLY CABINET.
37. HVAC DDC CABINET. RE: BM2.5-1
38. SURFACE MOUNT NURSE CALL CONDUITS FOR SECOND FLOOR. RE: BE2.9-1.
39. SURFACE MOUNT NURSE CALL CONDUITS FOR FIRST FLOOR. RE: BE2.8-1.
40. RACK ELEVATION KIT (CPI 10506-706) AND CHANNEL TO RUNWAY KIT (CPI 10595-712).
41. RUNWAY RADIUS DROP, CROSS MEMBER (CPI 12100-712) ALIGNED OVER VERTICAL MANAGERS AS SHOWN.
42. CONDUIT FOR 3/0 BONDING CONDUCTOR TO ELECTRICAL SERVICE ENTRANCE. BOND CONDUIT TO GROUND AT BOTH ENDS.
43. CATV DISTRIBUTION AMPLIFIER. TERMINATE FEEDER AND DROP CABLES.
44. COAXIAL CABLING FOR TELEVISION SERVICE DISTRIBUTION.
45. PROVIDE WALL-MOUNT RESIDENT'S ROOM ACCESS CONTROL ENCLOSURE AND TERMINATE FIRST AND SECOND FLOOR DEVICE CABLES. PROVIDE PATCH CABLE AND TRANSCEIVERS FOR OPTICAL FIBER CONNECTION TO EXISTING CAMPUS CONTROL CENTER IN BUILDING 67. PROVIDE GROUND CONDUCTOR TO TMGB.
46. PROVIDE WALL-MOUNT POWER SUPPLY WITH BATTERIES AND ELECTRICAL RECEPTACLE INSIDE ENCLOSURE FOR RESIDENT'S ROOM ACCESS CONTROL POWER.

REVISIONS	DATE

CSHQA

C.W. MOORE PLAZA
250 S. 5TH ST. BOISE, ID 83702
(208) 343-4635 FAX (208) 343-1858
http://www.cshqa.com

AMY K. DOCKTER, P.E.
C.W. MOORE PLAZA
250 S. 5TH ST
BOISE, IDAHO
PHONE: 208-343-4635 FAX: 208-343-1858

THESE DRAWINGS AND SPECIFICATIONS, AS INSTRUMENTS OF SERVICE, ARE AND SHALL REMAIN THE PROPERTY OF THE ARCHITECT / ENGINEER WHETHER THE PROJECT FOR WHICH THEY ARE MADE IS EXECUTED OR NOT. THESE DRAWINGS AND SPECIFICATIONS SHALL NOT BE USED BY ANY PERSON OR ENTITY ON OTHER PROJECTS, FOR ADDITIONS TO THIS PROJECT, OR COMPLETION OF THIS PROJECT WHEN PHASED WITHOUT THE WRITTEN CONSENT OF CSHQA OR ITS AFFILIATES. Copyright©2011

STAMP

PROFESSIONAL ENGINEER REGISTERED 9201 12-1-11 STATE OF IDAHO AMY K. DOCKTER

CAD FILE NAME: 531-319_BE4.2.DWG

XREF FILE NAME: 531-319_xB_30X42TLBK.DWG 531-319_xB_Base2.DWG

DRAWING TITLE: TELECOMMUNICATION ROOM DETAILS

APPROVED: CHIEF OF FACILITY MANAGEMENT SERVICE

APPROVED: MEDICAL CENTER DIRECTOR

PROJECT TITLE: BOISE VAMC NEW EXTENDED CARE UNIT BUILDING 'B' CLC

BUILDING NUMBER: 122

CHECKED: AKD

DRAWN: JDR

LOCATION: VAMC BOISE, IDAHO

DATE: 12/01/2011

PROJECT NO. 531-319

DRAWING NO. BE4.2

DWG 74 OF 78

DEPARTMENT OF VETERANS AFFAIRS

Username: jromlein
Dec 01, 2011 - 1:47pm
Q:\2010\10101.0\ConfDwg\02_Drawings\531-319_BE4.2.dwg