MECHANICAL ABBREVIATIONS

AC	AIR CONDITIONING
AFF	ABOVE FINISHED FLOOR
AFMS	AIR FLOW MEASURING STATION
AHU	AIR HANDLING UNIT
AL	ALUMINUM
ALT	ALTERNATIVE, ALTERNATE
AP	ACCESS PANEL
APD	AIR PRESSURE DROP
ARCH	ARCHITECT, ARCHITECTURAL
ATR	AIR TEMPERATURE RISE
ATV	AIR TURNING VANES
AUTO	AUTOMATIC
AI	DDC ANALOG INPUT
AO	DDC ANALOG OUTPUT
ATMOS	ATMOSPHERE
ASHRAE	AMERICAN SOCIETY OF HEATING, REFRIGERATION, AND AIR CONDITIONING ENGINEERS
BDD	BACKDRAFT DAMPER
BK	BREAK (OPEN) CONTACT
BHP	BRAKE HORSEPOWER
BLDG	BUILDING
BOD	BOTTOM OF DUCT
BOT	BOTTOM
C	COMMON
CR	CONTROL RELAY
CONV	CONVECTOR
CAB	CABINET
CD	CEILING DIFFUSER
CFM	CUBIC FEET PER MINUTE
CH-#	CHILLER
CHWR	CHILLED WATER RETURN
CHWS	CHILLED WATER SUPPLY
CHWP	CHILLED WATER PUMP
CL	CENTERLINE
CLG	CEILING
CO	CLEAN OUT
COTG	CLEAN OUT TO GRADE
CONC	CONCRETE
COND	CONDENSER, CONDENSATE
CPRSR	COMPRESSOR
CT	CURRENT TRANSDUCER
CV-#	CONTROL VALVE
CW	COLD WATER (DOMESTIC)
D	DEPTH, DEEP
(D)	DEMOLISH
DB	DRY BULB TEMPERATURE
DIA/ø	DIAMETER
DIFF	DIFFUSER
DWG	DRAWING
DA	DIRECT ACTING
DDC	DIRECT DIGITAL CONTROL
DI	DDC DIGITAL INPUT CONTACT
DO	DDC DIGITAL OUTPUT CONTACT
DPS	DIFFERENTIAL PRESSURE SWITCH
DPT	DIFFERENTIAL PRESSURE TRANSMITTER
EA	EXHAUST AIR
EAD	EXHAUST AIR DUCT
EP	ELECTRICAL TO PNEUMATIC
EAT	ENTERING AIR TEMPERATURE
EF	EXHAUST FAN
EFF	EFFICIENCY
EG	EXHAUST GRILLE
EL	ELEVATION
ELEC	ELECTRIC, ELECTRICAL
ELEV	ELEVATOR
EMD	END OF MAIN DRIP
EQUIP	EQUIPMENT
EWT	ENTERING WATER TEMPERATURE
EXH	EXHAUST
(E)	EXISTING
EXT	EXTERIOR
EXTN	EXTENSION
FCO	FLOOR CLEANOUT
FCU	FAN COIL UNIT
FIN FL/FF	FINISH FLOOR
FLA	FULL LOAD AMPS
FLR	FLOOR
FP	FIRE PROTECTION
FPM	FEET PER MINUTE
FT	FEET
FT HD	FEET OF HEAD
F	FAHRENHEIT
G	GAS (NATURAL)
GA	GAUGE
GAL	GALLON
GALV	GALVANIZED
GPM	GALLONS PER MINUTE
H	HOUR
HT	HEIGHT/HIGH
HWR	HEATING HOT WATER RETURN
HWS	HEATING HOT WATER SUPPLY
HP	HORSEPOWER
HVAC	HEATING/VENTILATING/AIR CONDITIONING
HW	HOT WATER (DOMESTIC)
HOA	HAND-OFF-AUTO SWITCH
I/P	INTERFACE PANEL
IR2	RELAY #1, CONTACT #2 (PLUG IN TYPE W/ON LIGHT)
ID	INSIDE DIAMETER
IN WC	INCHES OF WATER COLUMN
INSUL	INSULATION/INSULATE
INTR	INTERIOR
INV	INVERT
KW	KILOWATT
L	LITERS
L/M	LITERS PER MINUTE
LBS	POUNDS
LG	LENGTH/LONG
LAT	LEAVING AIR TEMPERATURE
LRA	LOCKED ROTOR AMPS
LVR	LOUVER
LWT	LEAVING WATER TEMPERATURE
M	METERS OR MINUTES
MA	MILLIAMPS
MCA	MINIMUM CIRCUIT AMPS
MCC	MOTOR CONTROL CENTER
MK	MAKE (CLOSED) CONTACT
MAX	MAXIMUM
MECH	MECHANICAL
MFR	MANUFACTURER
MIN	MINIMUM
MISC	MISCELLANEOUS
mm	MILLIMETERS
MTD	MOUNTED
MOCP	MAXIMUM OVERCURRENT AMPS
NIC	NOT IN CONTRACT
NO/#	NUMBER
NOM	NOMINAL
NTS	NOT TO SCALE
(N)	NEW
N	NEUTRAL
NG	NATURAL GAS
NC	NORMALLY CLOSED
NO	NORMALLY OPEN
OSA	OUTSIDE AIR
OC	ON CENTER
OD	OUTSIDE DIAMETER
OPNG	OPENING
OSD	OPEN SITE DRAIN
OBD	OPPOSED BLADE DAMPER
OL'S	MOTOR STARTER OVERLOADS
PE	PNEUMATIC TO ELECTRICAL
PH	PREHEAT
PS	PRESSURE SWITCH
PT	PRESSURE TRANSMITTER
PRV	PRESSURE REDUCING VALVE
PSF	POUNDS PER SQUARE FOOT
PSI	POUNDS PER SQUARE INCH
PVC	POLYVINYL CHLORIDE
R/RAD	RADIUS
RA	RETURN AIR
RAC	REVERSE ACTING
RG	RETURN AIR GRILLE
RD	ROOF DRAIN
REG	REGISTER
REQ'D	REQUIRED
RE:	REFERENCE
RH	REHEAT
RHC	REHEAT COIL
RLA	RUNNING LOAD AMPS
RM	ROOM
RPM	REVOLUTIONS PER MINUTE
RS	REFRIGERANT SUCTION
S	SECONDS
SA	SUPPLY AIR
SSD	SQUARE SUPPLY DIFFUSER
SMD	SMOKE DETECTOR
SAG	SUPPLY AIR GRILLE
SHT	SHEET
SOV	SOLENOID OPERATED VALVE
SP	STATIC PRESSURE
SPEC(S)	SPECIFICATION(S)
STD	STANDARD
TC	TEMPERATURE CONTROL
TD	TEMPERATURE DIFFERENCE
TS	TEMPERATURE SENSOR
TEMP	TEMPERATURE
TXV	THERMAL EXPANSION VALVE
TYP	TYPICAL
UH	UNIT HEATER
UON	UNLESS OTHERWISE NOTED
UV	UNIT VENTILATOR
V	VENT
VA	VALVE
VAC	VACUUM
VB	VACUUM BREAKER
VD	VOLUME DAMPER
VEL	VELOCITY
W	WATTS
W/	WITH
W/O	WITHOUT
WC	WATER COLUMN
WG	WATER GAUGE

MECHANICAL DUCTWORK SYMBOLS

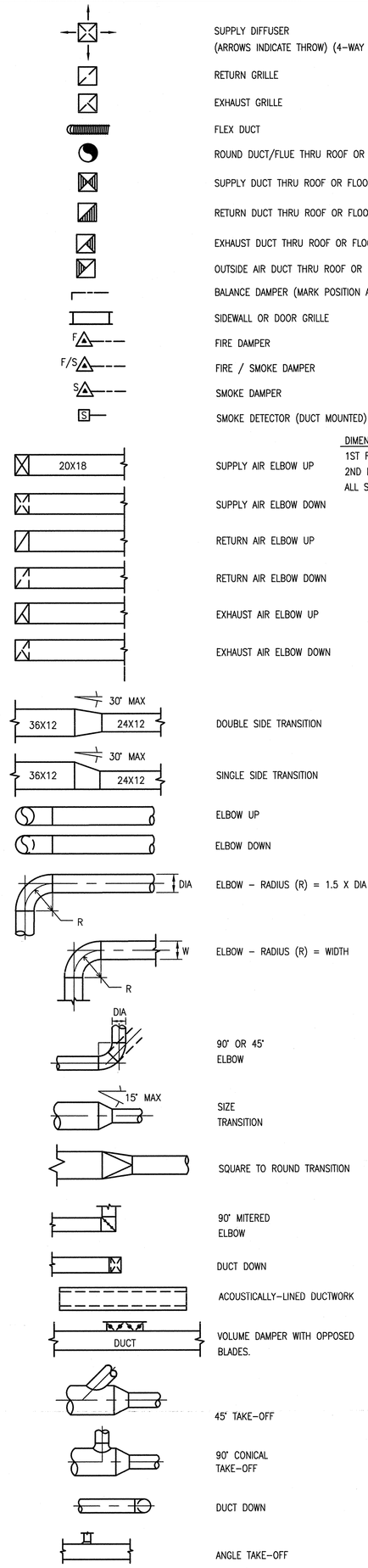

SUPPLY DIFFUSER (ARROWS INDICATE THROW) (4-WAY SHOWN)
RETURN GRILLE
EXHAUST GRILLE
FLEX DUCT
ROUND DUCT/FLUE THRU ROOF OR FLOOR
SUPPLY DUCT THRU ROOF OR FLOOR
RETURN DUCT THRU ROOF OR FLOOR
EXHAUST DUCT THRU ROOF OR FLOOR
OUTSIDE AIR DUCT THRU ROOF OR FLOOR
BALANCE DAMPER (MARK POSITION AFTER BALANCING)
SIDEWALL OR DOOR GRILLE
FIRE DAMPER
FIRE / SMOKE DAMPER
SMOKE DAMPER
SMOKE DETECTOR (DUCT MOUNTED)

DIMENSION DESCRIPTION:
1ST FIGURE = SIDE SHOWN
2ND FIGURE = SIDE NOT SHOWN
ALL SIZES IN INCHES (TYPICAL)

SUPPLY AIR ELBOW UP
SUPPLY AIR ELBOW DOWN
RETURN AIR ELBOW UP
RETURN AIR ELBOW DOWN
EXHAUST AIR ELBOW UP
EXHAUST AIR ELBOW DOWN
DOUBLE SIDE TRANSITION
SINGLE SIDE TRANSITION
ELBOW UP
ELBOW DOWN
ELBOW – RADIUS (R) = 1.5 X DIA
ELBOW – RADIUS (R) = WIDTH
90° OR 45° ELBOW
SIZE TRANSITION
SQUARE TO ROUND TRANSITION
90° MITERED ELBOW
DUCT DOWN
ACOUSTICALLY-LINED DUCTWORK
VOLUME DAMPER WITH OPPOSED BLADES.
45° TAKE-OFF
90° CONICAL TAKE-OFF
DUCT DOWN
ANGLE TAKE-OFF

MECHANICAL PIPING SYMBOLS

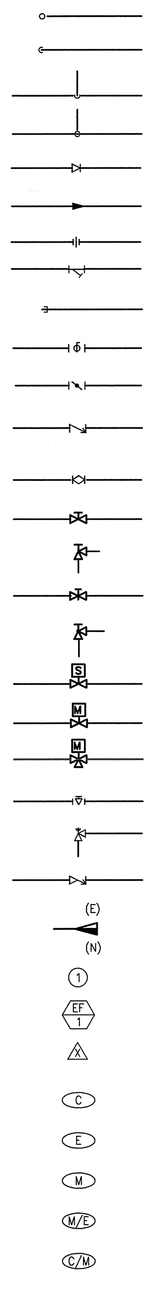

PIPE ELBOW UP
PIPE ELBOW DOWN
PIPE TEE BRANCH UP (W/ ELBOW)
PIPE TEE BRANCH DOWN (W/ ELBOW)
CONCENTRIC REDUCER
FLOW DIRECTION INDICATOR
UNION
STRAINER
CAP
BALL VALVE
BUTTERFLY VALVE
CHECK VALVE (ARROW TOWARD DIRECTION OF FREE FLOW)
CIRCUIT SETTER
GATE (SHUT-OFF) VALVE
GATE (SHUT-OFF) VALVE ANGLE
GLOBE VALVE
GLOBE VALVE, ANGLE
SOLENOID-OPERATED VALVE
2-WAY CONTROL VALVE (ELECTRIC)
3-WAY CONTROL VALVE (ELECTRIC)
LUBRICATED PLUG VALVE
ASME PRESSURE RELIEF VALVE
TRIPLE DUTY VALVE
CONNECT NEW TO EXISTING SHADED SIDE IS NEW WORK
KEY NOTES
EQUIPMENT CALLOUT (STANDARD)
REVISION DELTA
FURNISHED AND INSTALLED BY CONTROLS CONTRACTOR
FURNISHED AND INSTALLED BY ELECTRICAL CONTRACTOR
FURNISHED AND INSTALLED BY MECHANICAL CONTRACTOR
FURNISHED BY MECH INSTALLED AND WIRED BY ELECTRICAL
FURNISHED BY CONTROLS. INSTALLED BY MECHANICAL

MECHANICAL CONTROL SYMBOLS

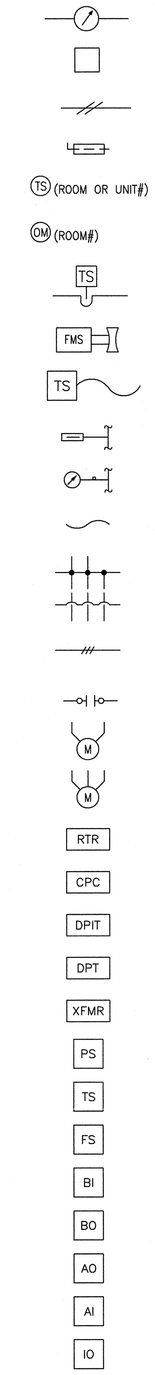

PRESSURE GAUGE W/ RANGE INDICATED
ELECTRICAL TERMINAL POINT
ELECTRICAL WIRING AND NUMBER OF CONDUCTORS
DISCONNECT SWITCH
WALL-MOUNT TEMPERATURE SENSOR
WALL-MOUNT OXYGEN DEFICIENCY MONITOR
TEMPERATURE SENSOR (DUCT OR PIPE MOUNTED)
WATER FLOW MEASURING STATION
TEMPERATURE SENSOR (AVERAGING TYPE)
THERMOMETER
PRESSURE GAUGE
CONDUCTOR CONTINUATION
JUNCTION
JUMP
NUMBER OF CONDUCTORS (3 SHOWN)
NORMALLY OPEN ELECTRICAL CONTACT (NO)
MOTOR (1ø)
MOTOR (3ø)
ROUTER
CENTERAL PLANT CONTROLLER
DIFFERENTIAL PRESSURE INDICATING TRANSMITTER
DIFFERENTIAL PRESSURE TRANSMITTER
TRANSFORMER
PRESSURE SENSOR
DUCT MOUNTED TEMPERATURE TRANSMITTER
FREEZE STAT
BINARY INPUT
BINARY OUTPUT
ANALOG OUTPUT
ANALOG INPUT
INPUT / OUTPUT

MECHANICAL LEGEND

—— CH —— CH —— CH ——	CHILLED WATER SUPPLY
—— CHR —— CHR —— CHR ——	CHILLED WATER RETURN
—— HWR —— HWR —— HWR ——	HOT WATER RETURN
—— HW —— HW —— HW ——	HOT WATER SUPPLY

GENERAL NOTES

A. ROUTE DUCTWORK IN COORDINATION WITH OTHER TRADES. HOLD DUCTWORK AS HIGH AS POSSIBLE AND ROUTE DUCTWORK WITHIN STRUCTURE WHERE POSSIBLE.

B. MOUNT TEMPERATURE SENSORS AT 1219 mm (48") AFF.

C. DUCT SIZES INDICATED FOR CONNECTION TO EQUIPMENT MAY DIFFER FROM EXACT UNIT CONNECTION DIMENSIONS. PROVIDE ALL NECESSARY TRANSITIONS/OFFSETS FROM DUCT SIZES LISTED TO UNIT CONNECTION.

D. FIRE DAMPERS SHALL BE 1-1/2 HOUR RATED UNLESS OTHERWISE NOTED.

E. CONTRACTOR SHALL PROVIDE ALL NECESSARY TRANSITIONS/OFFSETS TO AVOID CONFLICT WITH OTHER DUCTWORK, PIPING, STRUCTURE, ETC. AS PART OF THIS CONTRACT. WHEREVER AVAILABLE SPACE ALLOWS, OFFSETS SHALL BE MADE WITH 45 DEGREE ELBOWS WITH TURNING VANES.

F. ALL CEILING DIFFUSERS SHALL BE PROVIDED WITH 4-WAY THROW PATTERN UNLESS OTHERWISE NOTED.

G. PIPING PENETRATIONS THROUGH RATED ASSEMBLIES SHALL BE FIRESTOPPED IN ACCORDANCE NFPA-90A.

H. DUCTWORK AND PIPING SHOWN ARE FOR GENERAL ROUTING PURPOSES ONLY. CONTRACTOR SHALL CONFIRM EXACT ROUTING WITH OTHER TRADES AND PROVIDE ALL NECESSARY TRANSITIONS, HIGH POINT VENTS AND LOW POINT DRAINS AND OFFSETS NECESSARY TO INSTALL A COMPLETE AND FUNCTIONING SYSTEM.

I. THE CEILING SPACE FROM THE BOTTOM OF THE CEILING GRID TO A MINIMUM OF 152 mm (6") ABOVE THE BOTTOM OF THE CEILING GRID IS RESERVED FOR INSTALLATION OF CEILING MOUNTED ITEMS (I.E. LIGHT FIXTURES, SPEAKERS, DIFFUSERS). NO PIPING, DUCTWORK, CONDUITS, ETC., EXCEPT DROPS SERVING THE CEILING MOUNTED ITEMS, IS ALLOWED TO BE INSTALLED IN THIS SPACE, UNLESS OTHERWISE APPROVED BY THE CONTRACTING OFFICER.

J. CONTRACTOR IS REQUIRED TO FOLLOW ALL OSHA REGULATIONS CONCERNING CONSTRUCTION. THE SUPERINTENDENT IS REQUIRED TO HAVE COMPLETED, AS A MINIMUM, OSHA'S 30-HOUR TRAINING AND BE KNOWLEDGEABLE OF GENERAL SAFETY REQUIREMENTS FOR CONFINED SPACES, FALL PROTECTION, PERSONAL PROTECTIVE EQUIPMENT, TRENCHING, SCAFFOLDING, CRANES, ELECTRICAL, ETC. APPLICABLE SUBCONTRACTORS ARE TO HAVE A COMPETENT PERSON ON SITE WHEN REQUIRED BY OSHA. ALL OTHER WORKERS ON SITE ARE REQUIRED TO COMPLETE, AS A MINIMUM, OSHA'S 10-HOUR TRAINING.

K. IF ACCESSING A CONFINED SPACE, THE CONTRACTOR IS REQUIRED TO HAVE THEIR OWN CONFINED SPACE AIR MONITOR, TEST THE AIR PRIOR TO ENTERING ANY CONFINED SPACE AND FOLLOW THE VA CONFINED SPACE POLICY. IF THE CONTRACTOR MUST ENTER A SANITARY SEWER MANHOLE, IN ADDITION TO A CONFINED SPACE AIR MONITOR, THEY MUST HAVE PROPER OSHA RESCUE EQUIPMENT FOR A PERMIT REQUIRED CONFINED SPACE. WHERE IT IS NOT POSSIBLE FOR THE VA TO SHUTDOWN AN ELECTRICAL PANEL OR CIRCUIT, THE CONTRACTOR MUST PROVIDE AND USE THE APPROPRIATE SAFETY CLOTHING AND EQUIPMENT AS REQUIRED BY NFPA 70E. THE VA WILL BE MONITORING THE CONTRACTOR'S COMPLIANCE WITH OSHA REGULATIONS. FAILURE TO COMPLY IS GROUNDS FOR STOPPING WORK.

L. ALL CHILLER OR CONDENSING UNIT COILS ARE TO BE COMPLETELY PROTECTED USING AIR INTAKE FILTRATION SCREENS SPECIFICALLY DESIGNED FOR COTTONWOOD FILTRATION. THE SCREENS SHALL BE EASILY REMOVABLE WITH QUARTER TURN CONNECTIONS. THE SCREEN SHALL NOT VOID THE WARRANTY OF THE ORIGINAL EQUIPMENT MANUFACTURER. THE SCREENS SHALL HAVE A STATIC PRESSURE DROP LESS THAN 0.1 INCHES OF WATER GAGE, BE UV RESISTANT, FLAME RESISTANT, NON-ELECTRO STATIC, AND MOLD AND MILDEW RESISTANT. THE FILTERS SHALL BE IN ACCORDANCE WITH THE NATIONAL AIR FILTRATION ASSOCIATION FOR COTTONWOOD FILTERS.

M. VA WILL SHUT DOWN EXISTING UTILITY SYSTEM AS NECESSARY FOR CONTRACTOR TO PERFORM REQUIRED WORK. CONTRACTOR IS RESPONSIBLE FOR DRAINING EXISTING WET SYSTEMS, SUCH AS WATER, CHILLED WATER, HEATING WATER ETC. AS REQUIRED TO ACCOMPLISH NEW WORK. CONTRACTOR IS ALSO RESPONSIBLE FOR RE-FILLING SYSTEMS INCLUDING ADDING CHEMICAL AS REQUIRED. IT IS ACCEPTABLE TO SALVAGE EXISTING TREATED WATER IN CLEAN STORAGE CONTAINERS APPROVED BY THE VA, AND RE-INJECT IT INTO THE SYSTEM UPON COMPLETION OF WORK. ANY TREATED WATER NOT RE-INJECTED IS TO BE PROPERLY DISPOSED OF.

N. BALL VALVES SHALL BE USED FOR ISOLATION THROUGHOUT THE ENTIRE HYDRONIC SYSTEM REGARDLESS OF PIPE SIZE.

O. CONTRACTOR SHALL FURNISH AND INSTALL MANUAL VOLUME DAMPERS IN AREAS WITH LAY-IN CEILINGS AND DURO DYNE CONCEALED DAMPER SET COMPLETE WITH HEX NUT AND COVER PLATE IN AREAS WITH HARD CEILINGS.

REVISIONS | DATE

CSHQA
C.W. MOORE PLAZA
250 S. 5TH ST. BOISE, ID 83702
(208) 343-4635 FAX (208) 343-1858
http://www.cshqa.com

STEVEN HARDY, P.E.
C.W. MOORE PLAZA
250 S. 5TH ST
BOISE, IDAHO
PHONE: 208-343-4635 FAX: 208-343-1858

THESE DRAWINGS AND SPECIFICATIONS, AS INSTRUMENTS OF SERVICE, ARE AND SHALL REMAIN THE PROPERTY OF THE ARCHITECT / ENGINEER WHETHER THE PROJECT FOR WHICH THEY ARE MADE IS EXECUTED OR NOT. THESE DRAWINGS AND SPECIFICATIONS SHALL NOT BE USED BY ANY PERSON OR ENTITY ON OTHER PROJECTS, FOR ADDITIONS TO THIS PROJECT, OR COMPLETION OF THIS PROJECT WHEN PHASED WITHOUT THE WRITTEN CONSENT OF CSHQA OR ITS AFFILIATES. Copyright ©2011

STAMP: PROFESSIONAL ENGINEER REGISTERED 8002 STATE OF IDAHO STEVEN C. HARDY 12/1/11

CAD FILE NAME: 531-319_AM0.1.DWG
XREF FILE NAME: 531-319_xA_30X42TLBK.DWG

DRAWING TITLE: MECHANICAL COVER SHEET

PROJECT TITLE: BOISE VAMC NEW EXTENDED CARE UNIT BUILDING 'A' CLC

DATE: 12/01/2011
PROJECT NO.: 531-319

APPROVED: CHIEF OF FACILITY MANAGEMENT SERVICE
APPROVED: MEDICAL CENTER DIRECTOR

BUILDING NUMBER: 121 | CHECKED: SCH | DRAWN: RME

LOCATION: VAMC BOISE, IDAHO

DRAWING NO.: AM0.1
DWG 27 OF 58

DEPARTMENT OF VETERANS AFFAIRS

Username: jermey
Date: 12/01/2011 11:37am
P:\28M03\Mechanical\Bldg A\531-319_AM0.1.dwg

AIR COOLED CHILLER SCHEDULE

REFERENCE		GENERAL							COMPRESSORS				EVAPORATORS							CONDENSER FANS			ELECTRICAL							MOUNTING		
MARK	MFGR	MODEL	SERVICE	REFRIG TYPE	NOM. CAP. TONS	ACTUAL CAP. TONS	CONTROL STEPS	MINIMUM CAPACITY	COMPRESSOR QUANTITY	COMPRESSOR TYPE	RLA (EACH)	LRA (EACH)	EWT, deg C (F)	LWT, deg C (F)	L/M (GPM)	WPD, KPA (FT.)	FOULING FACTOR	MAX PRESS., PSI	QUAN	KW (HP) EACH	FLA (EACH)	AMB DB, deg C (F)	VOLT	PHASE	KW / TON	MCA	MOCP	STARTER TYPE	OP. WT. KG (LBS)	SHPG. WT. KG (LBS)	REMARKS
CH-A1	CARRIER	30RAP020	CHILLED WATER LOOP	R-410A	20	16.8	22	5.8	1	SCROLL	-	-	11 (51.7)	7.2 (45)	283 (63)	137 (46.1)	.00010	-	2	-	-	40.6 (105)	208	3	1.07	105.2	125	INTEGRAL	683 (1506)	722 (1592)	(1)

TYPICAL REQUIREMENTS:

A. UNIT RATINGS LISTED ARE AT 105°F AMBIENT.

REMARKS:

1. CHILLER SHALL BE FURNISHED WITH COTTONWOOD FILTRATION AS DESCRIBED IN GENERAL NOTES, SINGLE-POINT ELECTRICAL CONNECTION, NON-FUSED DISCONNECT SWITCH, ENERGY MANAGEMENT MODULE, COMPRESSOR SUCTION SERVICE VALVE, REMOVABLE CORE FILTER DRYER, CONDENSER COIL HAIL GUARD, HOT GAS BYPASS, HEAD PRESSURE SENSOR, REMOTE INTERFACE PANEL MOUNTED IN BUILDING A MECHANICAL ROOM, CONTROL PANEL WITH BACnet/IP COMMUNICATION CAPABILITY TO BMS/DDC, BACnet INTEGRATION CARD AND COMPRESSOR SOUND REDUCTION ENCLOSURE. CHILLER SHALL BE FURNISHED AS A COMPLETE PACKAGE WITH DUPLEX PUMP PACKAGE (5HP / 62 FT EXTERNAL HEAD), 119 GALLON BUFFER TANK AND HYDRONIC ACCESSORIES.

FAN COIL UNIT SCHEDULE

REFERENCE				FAN					CHILLED WATER COIL							HOT WATER COIL							ELECTRICAL				
MARK	MFGR	MODEL	SERVICE	TYPE	SUPPLY M^3/h (CFM)	OSA M^3/h (CFM)	MOTOR KW (HP)	RPM	OUTPUT, KW (MBH)	EAT, deg C (F)	LAT deg C (F)	L/M (GPM)	WATER PD KPA (FT.)	EWT, deg C (F)	LWT, deg C (F)	OUTPUT, KW (MBH)	EAT, deg C (F)	LAT deg C (F)	L/M (GPM)	WATER PD KPA (FT.)	EWT, deg C (F)	LWT, deg C (F)	VOLTAGE	PHASE	MOUNTING	OP. WEIGHT, KG (LBS.)	REMARKS
FCU-A1	MCQUAY	FSHD S06	BLDG A 1ST FLOOR	DIRECT	680 (400)	136 (80)	.186 (1/4)	MEDIUM	3.28 (11.2)	28 (82)	16 (60)	10 (2.4)	17 (5.2)	7 (45)	13 (55)	2.63 (9.0)	17 (63)	29 (84)	2.2 (.6)	.08 (.03)	66 (150)	49 (120)	115	1	CEILING	48 (105)	(1)(2)
FCU-A2	MCQUAY	FSHD S06	BLDG A 1ST FLOOR	DIRECT	680 (400)	136 (80)	.186 (1/4)	MEDIUM	3.28 (11.2)	28 (82)	16 (60)	10 (2.4)	17 (5.2)	7 (45)	13 (55)	2.63 (9.0)	17 (63)	29 (84)	2.2 (.6)	.08 (.03)	66 (150)	49 (120)	115	1	CEILING	48 (105)	(1)(2)
FCU-A3	MCQUAY	FSHD S06	BLDG A 1ST FLOOR	DIRECT	680 (400)	136 (80)	.186 (1/4)	MEDIUM	3.28 (11.2)	28 (82)	16 (60)	10 (2.4)	17 (5.2)	7 (45)	13 (55)	2.63 (9.0)	17 (63)	29 (84)	2.2 (.6)	.08 (.03)	66 (150)	49 (120)	115	1	CEILING	48 (105)	(1)(2)
FCU-A4	MCQUAY	FSHD S06	BLDG A 1ST FLOOR	DIRECT	680 (400)	136 (80)	.186 (1/4)	MEDIUM	3.28 (11.2)	28 (82)	16 (60)	10 (2.4)	17 (5.2)	7 (45)	13 (55)	2.63 (9.0)	17 (63)	29 (84)	2.2 (.6)	.08 (.03)	66 (150)	49 (120)	115	1	CEILING	48 (105)	(1)(2)
FCU-A5	MCQUAY	FSHD S06	BLDG A 1ST FLOOR	DIRECT	680 (400)	136 (80)	.186 (1/4)	MEDIUM	3.28 (11.2)	28 (82)	16 (60)	10 (2.4)	17 (5.2)	7 (45)	13 (55)	2.63 (9.0)	17 (63)	29 (84)	2.2 (.6)	.08 (.03)	66 (150)	49 (120)	115	1	CEILING	48 (105)	(1)(2)
FCU-A6	MCQUAY	FSHD S06	BLDG A 1ST FLOOR	DIRECT	680 (400)	136 (80)	.186 (1/4)	MEDIUM	3.28 (11.2)	28 (82)	16 (60)	10 (2.4)	17 (5.2)	7 (45)	13 (55)	2.63 (9.0)	17 (63)	29 (84)	2.2 (.6)	.08 (.03)	66 (150)	49 (120)	115	1	CEILING	48 (105)	(1)(2)
FCU-A7	MCQUAY	FSHD S06	BLDG A 1ST FLOOR	DIRECT	680 (400)	136 (80)	.186 (1/4)	MEDIUM	3.28 (11.2)	28 (82)	16 (60)	10 (2.4)	17 (5.2)	7 (45)	13 (55)	2.63 (9.0)	17 (63)	29 (84)	2.2 (.6)	.08 (.03)	66 (150)	49 (120)	115	1	CEILING	48 (105)	(1)(2)
FCU-A8	MCQUAY	FSHD S06	BLDG A 1ST FLOOR	DIRECT	680 (400)	136 (80)	.186 (1/4)	MEDIUM	3.28 (11.2)	28 (82)	16 (60)	10 (2.4)	17 (5.2)	7 (45)	13 (55)	2.63 (9.0)	17 (63)	29 (84)	2.2 (.6)	.08 (.03)	66 (150)	49 (120)	115	1	CEILING	48 (105)	(1)(2)
FCU-A9	MCQUAY	FSHD S16	BLDG A 1ST FLOOR	DIRECT	2183 (1285)	314 (185)	.186 (1/4)	MEDIUM	10.9 (37.4)	28 (82)	16 (60)	30 (7.9)	18 (6.0)	7 (45)	13 (55)	12.6 (43.0)	17 (63)	34 (94)	11 (2.9)	.55 (.18)	66 (150)	49 (120)	115	1	CEILING	82 (181)	(1)(2)
FCU-A10	MCQUAY	FSHD S06	BLDG A 1ST FLOOR	DIRECT	680 (400)	85 (50)	.186 (1/4)	MEDIUM	3.28 (11.2)	28 (82)	16 (60)	10 (2.4)	17 (5.2)	7 (45)	13 (55)	2.63 (9.0)	17 (63)	29 (84)	2.2 (.6)	.08 (.03)	66 (150)	49 (120)	115	1	CEILING	48 (105)	(1)(2)
FCU-A11	MCQUAY	FSHD S12	BLDG A 1ST FLOOR	DIRECT	1359 (800)	340 (200)	.24 (1/3)	MEDIUM	73.4 (25.0)	28 (82)	15 (59)	20 (5.3)	17 (5.8)	7 (45)	13 (55)	5.3 (18.2)	17 (63)	29 (84)	4.5 (1.2)	4.3 (1.45)	66 (150)	49 (120)	115	1	CEILING	60 (132)	(1)(2)
FCU-A12	MCQUAY	FSHD S12	BLDG A 1ST FLOOR	DIRECT	1359 (800)	195 (115)	.24 (1/3)	MEDIUM	73.4 (25.0)	28 (82)	15 (59)	20 (5.3)	17 (5.8)	7 (45)	13 (55)	5.3 (18.2)	17 (63)	29 (84)	4.5 (1.2)	4.3 (1.45)	66 (150)	49 (120)	115	1	CEILING	60 (132)	(1)(2)
FCU-A13	MCQUAY	FSHD S06	BLDG A 1ST FLOOR	DIRECT	680 (400)	136 (80)	.186 (1/4)	MEDIUM	3.28 (11.2)	28 (82)	16 (60)	10 (2.4)	17 (5.2)	7 (45)	13 (55)	2.63 (9.0)	17 (63)	29 (84)	2.2 (.6)	.08 (.03)	66 (150)	49 (120)	115	1	CEILING	48 (105)	(1)(2)
FCU-A14	MCQUAY	FSHD S12	BLDG A 1ST FLOOR	DIRECT	1359 (800)	136 (80)	.24 (1/3)	MEDIUM	73.4 (25.0)	28 (82)	15 (59)	20 (5.3)	17 (5.8)	7 (45)	13 (55)	5.3 (18.2)	17 (63)	29 (84)	4.5 (1.2)	4.3 (1.45)	66 (150)	49 (120)	115	1	CEILING	60 (132)	(1)(2)
FCU-A15	MCQUAY	FSHD S06	BLDG A 1ST FLOOR	DIRECT	680 (400)	136 (80)	.186 (1/4)	MEDIUM	3.28 (11.2)	28 (82)	16 (60)	10 (2.4)	17 (5.2)	7 (45)	13 (55)	2.63 (9.0)	17 (63)	29 (84)	2.2 (.6)	.08 (.03)	66 (150)	49 (120)	115	1	CEILING	48 (105)	(1)(2)
FCU-A16	MCQUAY	FSHD S06	BLDG A 1ST FLOOR	DIRECT	680 (400)	136 (80)	.186 (1/4)	MEDIUM	3.28 (11.2)	28 (82)	16 (60)	10 (2.4)	17 (5.2)	7 (45)	13 (55)	2.63 (9.0)	17 (63)	29 (84)	2.2 (.6)	.08 (.03)	66 (150)	49 (120)	115	1	CEILING	48 (105)	(1)(2)
FCU-A17	MCQUAY	FSHD S06	BLDG A 1ST FLOOR	DIRECT	680 (400)	136 (80)	.186 (1/4)	MEDIUM	3.28 (11.2)	28 (82)	16 (60)	10 (2.4)	17 (5.2)	7 (45)	13 (55)	2.63 (9.0)	17 (63)	29 (84)	2.2 (.6)	.08 (.03)	66 (150)	49 (120)	115	1	CEILING	48 (105)	(1)(2)
FCU-A18	MCQUAY	FSHD S12	BLDG A 1ST FLOOR	DIRECT	1359 (800)	187 (110)	.24 (1/3)	MEDIUM	73.4 (25.0)	28 (82)	15 (59)	20 (5.3)	17 (5.8)	7 (45)	13 (55)	5.3 (18.2)	17 (63)	29 (84)	4.5 (1.2)	4.3 (1.45)	66 (150)	49 (120)	115	1	CEILING	60 (132)	(1)(2)

TYPICAL REQUIREMENTS:

A. PERFORMANCE FOR CHILLED WATER COIL BASED ON 30% PROPYLENE GLYCOL AND 70% FRESH WATER SOLUTION.

B. PERFORMANCE FOR HEATING WATER COIL BASED ON 100% FRESH WATER SOLUTION.

(X) REMARKS:

1. FURNISH WITH HOT WATER AND CHILLED WATER FLEXIBLE HOSE KITS COMPLETE WITH AUTOMATIC FLOW CONTROL VALVE, CONTROL VALVE, STRAINER, BALL VALVES AND UNIONS.

2. FURNISH WITH SUSPENSION MOUNTING KIT.

ENERGY RECOVERY UNIT SCHEDULE

REFERENCE				SUPPLY FAN				EXHAUST FAN				HEAT EXCHANGER (OSA)					HEAT EXCHANGER (EXHAUST)			ELECTRICAL				
MARK	MFGR	MODEL	SERVICE	TYPE	AIRFLOW M^3/h (CFM)	MOTOR KW (HP)	RPM	TYPE	AIRFLOW M^3/h (CFM)	MOTOR KW (HP)	RPM	SEASON	EAT, DB deg C (F)	EAT, WB deg C (F)	LAT, DB deg C (F)	LAT, WB deg C (F)	EAT, DB deg C (F)	EAT, RH%	LAT, DB deg C (F)	VOLTAGE	PHASE	MOUNTING	OP. WEIGHT, KG (LBS.)	REMARKS
ERU-A1	INNOVENT	ERU-SS-PL-1700-208	VENTILATION/EXHAUST	FCDW	2888 (1700)	.746 (1)	1307	FCDW	2718 (1600)	.746 (1)	1291	WINTER	-18 (0)	-	23 (45)	-	18 (65)	50	0 (31)	208	3	CURB	1270 (2,800)	(1)
												SUMMER	36 (96)	17 (62)	30 (86)	15 (58)	27 (80)	50	32 (90)					

(X) REMARKS:

1. FURNISH WITH FACTORY 610 mm (24") ROOF CURB, FACTORY DEFROST CONTROL COMPLETE WITH MODULATING FACE AND BYPASS DAMPER CONTROL, BACnet/IP COMMUNICATION CAPABILITY TO BMS/DDC, ALUMINUM HEAT EXCHANGER, BYPASS PLENUM, 2" FILTER SECTION WITH MERV 8 FILTERS AND FILTER PRESSURE MONITORING.

PUMP SCHEDULE

REFERENCE				PUMP									ELECTRICAL					MOUNTING		
MARK	MFGR	MODEL	SERVICE	TYPE	SPEED, RPM	CAPACITY, L/M (GPM)	TOTAL HEAD, KPA (FT)	OP. TEMP, deg C (F)	IMPELLER SIZE, MM (IN)	EFFICIENCY (%)	CONNECTIONS, MM (IN.) SUCT	CONNECTIONS, MM (IN.) DISCH	KW BHP	MOTOR KW (HP)	VOLTS	PHASE	MOTOR TYPE	TYPE	WEIGHT KG (LBS)	REMARKS
P-HWHS-1	B&G	SERIES 80 1-1/2x1-1/2x7B	BUILDING A HEATING WATER LOOP	IN-LINE	1750	65 (17.2)	164 (55)	66 (150)	178 (7.0)	34.1	38 (1.5)	38 (1.5)	.53 (.71)	1.1 (1.5)	208	3	ODP	IN-LINE	77 (170)	(1)(2)(3)
P-HWHS-2	B&G	SERIES 80 1-1/2x1-1/2x7B	BUILDING A HEATING WATER LOOP	IN-LINE	1750	65 (17.2)	164 (55)	66 (150)	178 (7.0)	34.1	38 (1.5)	38 (1.5)	.53 (.71)	1.1 (1.5)	208	3	ODP	IN-LINE	77 (170)	(1)(2)(3)

TYPICAL REQUIREMENTS:

A. IMPELLER SIZE SCHEDULED IS APPROXIMATE. FINAL SIZE SHALL BE DETERMINED BY MANUFACTURER BASED ON SCHEDULED POINT OF OPERATION.

(X) REMARKS:

1. PUMP SIZING AND PERFORMANCE BASED ON 100% FRESH WATER SOLUTION.
2. PUMP MOTOR SHALL BE INVERTER-DUTY RATED, AND BE COMPATIBLE WITH ASSOCIATED VARIABLE FREQUENCY DRIVE.
3. PROVIDE PUMP WITH VARIABLE FREQUENCY DRIVE.

DIFFUSER, REGISTER AND GRILLE SCHEDULE

REFERENCE										
MARK	MFGR	MODEL	DESCRIPTION	FACE TYPE	MOUNTING	FRAME SIZE (NOMINAL) MM (IN)	NECK/PLENUM SIZE MM (IN)	MAX M^3/h (CFM)	COLOR	REMARKS
CD-1	TITUS	TDC	SUPPLY DIFFUSER	LOUVERED	LAY-IN	610 (24") x 610 (24")	152 (6")ø	297 (175)	WHITE	(1)(3)
CD-2	TITUS	TDC	SUPPLY DIFFUSER	LOUVERED	LAY-IN	610 (24") x 610 (24")	203 (8")ø	476 (280)	WHITE	(1)(3)
CD-3	TITUS	TDC	SUPPLY DIFFUSER	LOUVERED	LAY-IN	610 (24") x 610 (24")	254 (10")ø	646 (380)	WHITE	(1)(3)
CD-4	TITUS	TDC	SUPPLY DIFFUSER	LOUVERED	LAY-IN	610 (24") x 610 (24")	304 (12")ø	935 (550)	WHITE	(1)(3)
CD-5	TITUS	TDC	SUPPLY DIFFUSER	LOUVERED	LAY-IN	610 (24") x 610 (24")	356 (14")ø	1359 (800)	WHITE	(1)(3)
CD-6	TITUS	TDC	SUPPLY DIFFUSER	LOUVERED	SURFACE	305 (12") x 305 (12")	152 (6")ø	297 (175)	WHITE	(1)(3)
CD-7	TITUS	TDC	SUPPLY DIFFUSER	LOUVERED	SURFACE	305 (12") x 305 (12")	203 (8")ø	476 (280)	WHITE	(1)(3)
CD-8	TITUS	TDC	SUPPLY DIFFUSER	LOUVERED	SURFACE	305 (12") x 305 (12")	254 (10")ø	646 (380)	WHITE	(1)(3)
CD-9	TITUS	TDC	SUPPLY DIFFUSER	LOUVERED	SURFACE	305 (12") x 305 (12")	304 (12")ø	935 (550)	WHITE	(1)(3)
CD-10	TITUS	TDC	SUPPLY DIFFUSER	LOUVERED	SURFACE	457 (18") x 457 (18")	356 (14")ø	1359 (800)	WHITE	(1)(3)
RG-1	TITUS	50FF	RETURN GRILLE	EGGCRATE	LAY-IN	305 (12") x 610 (24")	254 (10") x 559 (22")	1870 (1100)	WHITE	(2)(3)(4)(5)
RG-2	TITUS	50FF	RETURN GRILLE	EGGCRATE	LAY-IN	610 (24") x 610 (24")	559 (22") x 559 (22")	4248 (2500)	WHITE	(2)(3)(4)(5)
RG-3	TITUS	50FF	RETURN GRILLE	EGGCRATE	SURFACE	356 (14") x 356 (14")	305 (12") x 305 (12")	1359 (800)	WHITE	(2)(4)(5)
RG-4	TITUS	50FF	RETURN GRILLE	EGGCRATE	SURFACE	610 (24") x 610 (24")	559 (22") x 559 (22")	4248 (2500)	WHITE	(2)(4)(5)
EG-1	TITUS	50F	EXHAUST GRILLE	EGGCRATE	LAY-IN	305 (12") x 610 (24")	254 (10") x 559 (22")	0870 (1100)	WHITE	(2)(3)(4)
EG-2	TITUS	50F	EXHAUST GRILLE	EGGCRATE	LAY-IN	610 (24") x 610 (24")	559 (22") x 559 (22")	4248 (2500)	WHITE	(2)(3)(4)
EG-3	TITUS	50F	EXHAUST GRILLE	EGGCRATE	SURFACE	356 (14") x 356 (14")	305 (12") x 305 (12")	1359 (800)	WHITE	(2)(4)
EG-4	TITUS	50F	EXHAUST GRILLE	EGGCRATE	SURFACE	610 (24") x 610 (24")	559 (22") x 559 (22")	4248 (2500)	WHITE	(2)(4)

TYPICAL REQUIREMENTS:

A. VERIFY CEILING AND WALL CONSTRUCTION ON ARCHITECTURAL DRAWINGS. PROVIDE CORRECT FRAME TYPES.

B. DIFFUSERS SHALL BE FURNISHED WITH 4-WAY THROW UNLESS INDICATED OTHERWISE ON DRAWINGS.

(X) REMARKS:

1. FURNISH WITH ROUND-SQUARE TRANSITION.
2. PAINT BEHIND GRILLE FLAT BLACK.
3. FURNISH WITH A [305 mm x 610 mm (12" x 24")] OR [610 mm x 610 mm (24" x 24")] SIZE MODULE FOR INSTALLATION IN LAY-IN CEILING GRID.
4. FURNISH DUCT TO REGISTER TRANSITION.
5. FURNISH 1" FILTER FRAME, AND MERV 8 PLEATED FILTER. FILTER SHALL BE ACCESSIBLE THROUGH GRILLE FACE AND ARE REQUIRED FOR FAN COIL UNIT FILTRATION.

SPLIT SYSTEM AC UNIT SCHEDULE

FAN COIL

REFERENCE						SUPPLY FAN			COIL			ELECTRICAL				
MARK	MFGR	MODEL	NOMINAL TONS	SERVICE	CONFIGURATION	AIRFLOW CFM	OSA CFM	EXT. SP. in. WC.	COIL TYPE	TOTAL CAP, MBH	SENS. CAP, MBH	VOLT	PHASE	MCA AMPS	MOCP AMPS	OP. WEIGHT LBS
FC-1	CARRIER	RAS-09LAV-UL	.75	M/E 200	HIGH WALL	305	-	-	DX	8.31	6.61	208	1	-	-	25

CONDENSING UNIT

REFERENCE				ELECTRICAL					
MARK	MFGR	MODEL	AMB. TEMP. deg F, DB	VOLT	PHASE	MCA AMPS	MOCP AMPS	OP. WEIGHT LBS	REMARKS
CU-1	CARRIER	RAS-09LKV-UL	106	208	1	10	15	82	(1)(2)(3)

(X) REMARKS:

1 REFRIGERANT LINES SHALL BE SIZED AND INSTALLED PER THE MANUFACTURER'S WRITTEN INSTRUCTIONS FOR DEVELOPED LINE LENGTH.

2 PROVIDE WITH LOW AMBIENT CONTROLS (0°F).

3 FURNISH CONDENSING UNIT WITH COMPRESSOR OVERLOAD PROTECTION, INTERNAL VIBRATION ISOLATION. HIGH AND LOW PRESSURE SWITCHES. COMPRESSOR ANTI-SHORT-CYCLE PROTECTION, CRANK CASE HEATER, REMOTE CONTROL AND WEATHER PROTECTED CABINET.

FLOW METER SCHEDULE

REFERENCE				GENERAL					
MARK	MFGR	MODEL	TYPE	SERVICE	PIPE DIAM, MM (IN)	DESIGN FLOW, L/M (GPM)	ACCURACY, %	OP. TEMP, deg C (F)	REMARKS
FM-A1	ONICON	F-1200	TURBINE	HEATING WATER	51 (2)ø	162 (42.8)	0.5%	71 (160)	

REVISIONS | DATE

CSHQA

C.W. MOORE PLAZA
250 S. 5TH ST. BOISE, ID 83702
(208) 343-4635 FAX (208) 343-1858
http://www.cshqa.com

STEVEN HARDY, P.E.
C.W. MOORE PLAZA
250 S. 5TH ST
BOISE, IDAHO
PHONE: 208-343-4635 FAX: 208-343-1858

THESE DRAWINGS AND SPECIFICATIONS, AS INSTRUMENTS OF SERVICE, ARE AND SHALL REMAIN THE PROPERTY OF THE ARCHITECT / ENGINEER WHETHER THE PROJECT FOR WHICH THEY ARE MADE IS EXECUTED OR NOT. THESE DRAWINGS AND SPECIFICATIONS SHALL NOT BE USED BY ANY PERSON OR ENTITY ON OTHER PROJECTS, FOR ADDITIONS TO THIS PROJECT, OR COMPLETION OF THIS PROJECT-WHEN PHASED-WITHOUT THE WRITTEN CONSENT OF CSHQA OR ITS AFFILIATES. Copyright ©2011

STAMP: PROFESSIONAL ENGINEER REGISTERED 6002 STATE OF IDAHO STEVEN C. HARDY

CAD FILE NAME: 531-319_AM0.2.DWG

XREF FILE NAME: 531-319_xA_30X42TLBK.DWG

DRAWING TITLE: MECHANICAL SCHEDULES

APPROVED: CHIEF OF FACILITY MANAGEMENT SERVICE

APPROVED: MEDICAL CENTER DIRECTOR

PROJECT TITLE: BOISE VAMC NEW EXTENDED CARE UNIT BUILDING 'A' CLC

BUILDING NUMBER: 121 | CHECKED: SCH | DRAWN: RME

LOCATION: VAMC BOISE, IDAHO

DATE: 12/01/2011

PROJECT NO.: 531-319

DRAWING NO.: AM0.2

DWG 28 OF 58

DEPARTMENT OF VETERANS AFFAIRS

Username: jermey
Dec 01, 2011 - 11:37am
P:\28M03\Mechanical\Bldg A\531-319_AM0.2.dwg

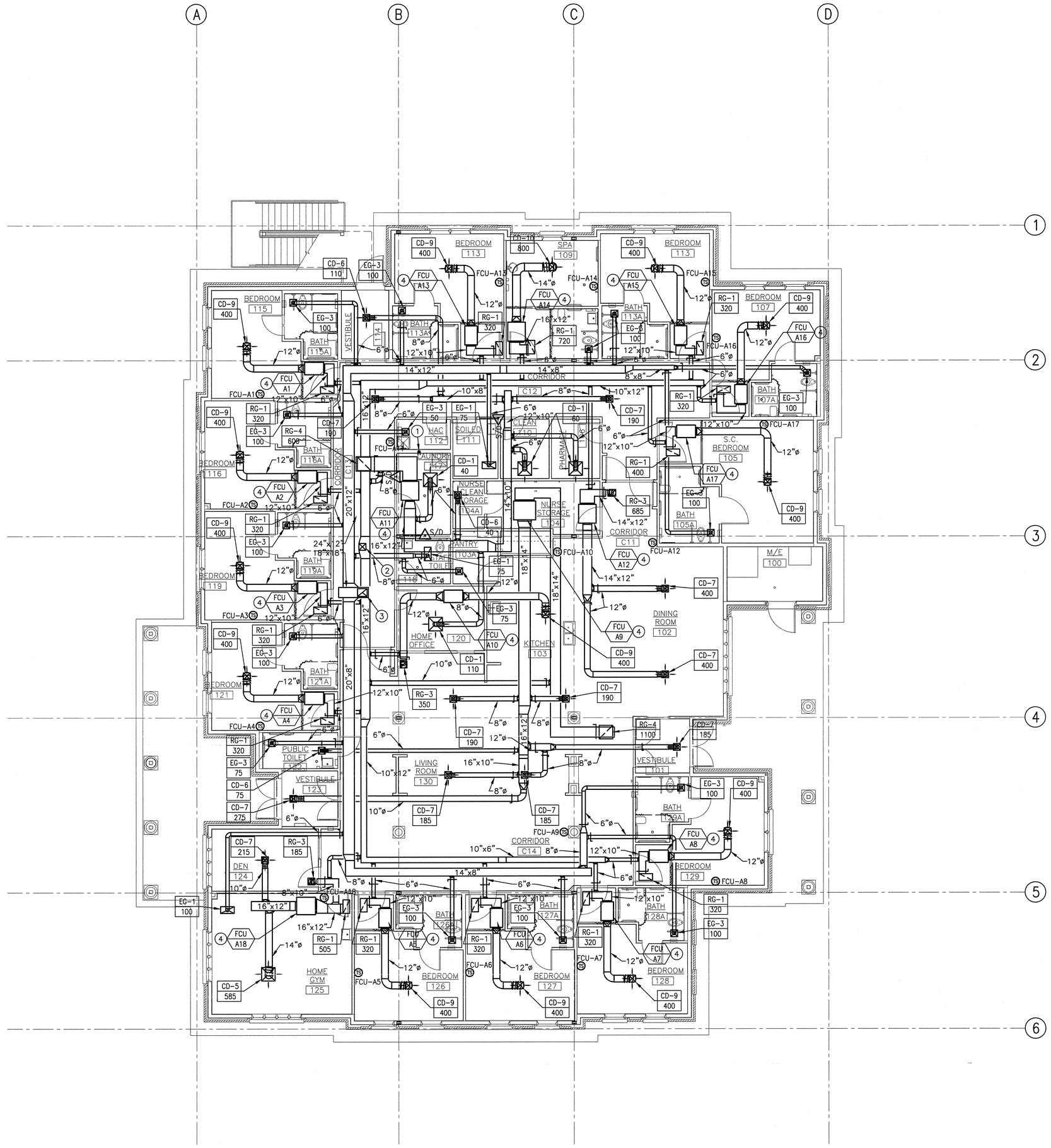

1 HVAC PLAN

0' 4' 8' 12' 16' 20' 24' SCALE: 1/8 "=1'-0"

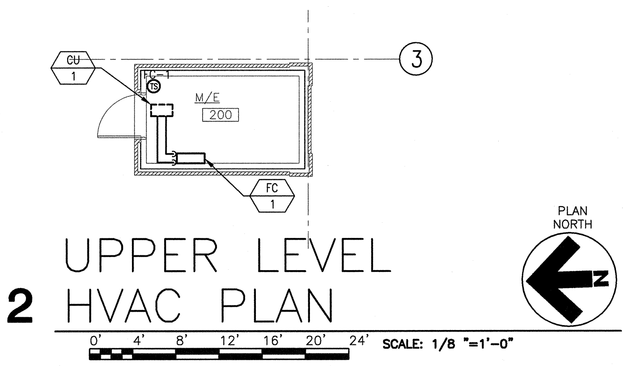

2 HVAC PLAN

0' 4' 8' 12' 16' 20' 24' SCALE: 1/8 "=1'-0"

GENERAL NOTES:

A. ROUTE DUCTWORK IN COORDINATION WITH OTHER TRADES. HOLD DUCTWORK AS HIGH AS POSSIBLE AND ROUTE DUCTWORK WITHIN STRUCTURE WHERE POSSIBLE.

B. MOUNT TEMPERATURE SENSORS AT 1219 mm (48") AFF.

C. DUCT SIZES INDICATED FOR CONNECTION TO EQUIPMENT MAY DIFFER FROM EXACT UNIT CONNECTION DIMENSIONS. PROVIDE ALL NECESSARY TRANSITIONS/OFFSETS FROM DUCT SIZES LISTED TO UNIT CONNECTION.

D. FIRE DAMPERS SHALL BE 1-1/2 HOUR RATED UNLESS OTHERWISE NOTED.

E. CONTRACTOR SHALL PROVIDE ALL NECESSARY TRANSITIONS/OFFSETS TO AVOID CONFLICT WITH OTHER DUCTWORK, PIPING, STRUCTURE, ETC. AS PART OF THIS CONTRACT. WHEREVER AVAILABLE SPACE ALLOWS, OFFSETS SHALL BE MADE WITH 45 DEGREE ELBOWS WITH TURNING VANES.

F. ALL CEILING DIFFUSERS SHALL BE PROVIDED WITH 4-WAY THROW PATTERN UNLESS OTHERWISE NOTED.

G. PIPING PENETRATIONS THROUGH RATED ASSEMBLIES SHALL BE FIRESTOPPED IN ACCORDANCE NFPA-90A.

H. DUCTWORK AND PIPING SHOWN ARE FOR GENERAL ROUTING PURPOSES ONLY. CONTRACTOR SHALL CONFIRM EXACT ROUTING WITH OTHER TRADES AND PROVIDE ALL NECESSARY TRANSITIONS, HIGH POINT VENTS AND LOW POINT DRAINS AND OFFSETS NECESSARY TO INSTALL A COMPLETE AND FUNCTIONING SYSTEM.

I. THE CEILING SPACE FROM THE BOTTOM OF THE CEILING GRID TO A MINIMUM OF 152 mm (6") ABOVE THE BOTTOM OF THE CEILING GRID IS RESERVED FOR INSTALLATION OF CEILING MOUNTED ITEMS (I.E. LIGHT FIXTURES, SPEAKERS, DIFFUSERS). NO PIPING, DUCTWORK, CONDUITS, ETC., EXCEPT DROPS SERVING THE CEILING MOUNTED ITEMS, IS ALLOWED TO BE INSTALLED IN THIS SPACE, UNLESS OTHERWISE APPROVED BY THE CONTRACTING OFFICER.

J. CONTRACTOR IS REQUIRED TO FOLLOW ALL OSHA REGULATIONS CONCERNING CONSTRUCTION. THE SUPERINTENDENT IS REQUIRED TO HAVE COMPLETED, AS A MINIMUM, OSHA'S 30-HOUR TRAINING AND BE KNOWLEDGEABLE OF GENERAL SAFETY REQUIREMENTS FOR CONFINED SPACES, FALL PROTECTION, PERSONAL PROTECTIVE EQUIPMENT, TRENCHING, SCAFFOLDING, CRANES, ELECTRICAL, ETC. APPLICABLE SUBCONTRACTORS ARE TO HAVE A COMPETENT PERSON ON SITE WHEN REQUIRED BY OSHA. ALL OTHER WORKERS ON SITE ARE REQUIRED TO COMPLETE, AS A MINIMUM, OSHA'S 10-HOUR TRAINING.

K. IF ACCESSING A CONFINED SPACE, THE CONTRACTOR IS REQUIRED TO HAVE THEIR OWN CONFINED SPACE AIR MONITOR, TEST THE AIR PRIOR TO ENTERING ANY CONFINED SPACE AND FOLLOW THE VA CONFINED SPACE POLICY. IF THE CONTRACTOR MUST ENTER A SANITARY SEWER MANHOLE, IN ADDITION TO A CONFINED SPACE AIR MONITOR, THEY MUST HAVE PROPER OSHA RESCUE EQUIPMENT FOR A PERMIT REQUIRED CONFINED SPACE. WHERE IT IS NOT POSSIBLE FOR THE VA TO SHUTDOWN AN ELECTRICAL PANEL OR CIRCUIT, THE CONTRACTOR MUST PROVIDE AND USE THE APPROPRIATE SAFETY CLOTHING AND EQUIPMENT AS REQUIRED BY NFPA 70E. THE VA WILL BE MONITORING THE CONTRACTOR'S COMPLIANCE WITH OSHA REGULATIONS. FAILURE TO COMPLY IS GROUNDS FOR STOPPING WORK.

L. ALL CHILLER OR CONDENSING UNIT COILS ARE TO BE COMPLETELY PROTECTED USING AIR INTAKE FILTRATION SCREENS SPECIFICALLY DESIGNED FOR COTTONWOOD FILTRATION. THE SCREENS SHALL BE EASILY REMOVABLE WITH QUARTER TURN CONNECTIONS. THE SCREEN SHALL NOT VOID THE WARRANTY OF THE ORIGINAL EQUIPMENT MANUFACTURER. THE SCREENS SHALL HAVE A STATIC PRESSURE DROP LESS THAN 0.1 INCHES OF WATER GAGE, BE UV RESISTANT, FLAME RESISTANT, NON-ELECTRO STATIC, AND MOLD AND MILDEW RESISTANT. THE FILTERS SHALL BE IN ACCORDANCE WITH THE NATIONAL AIR FILTRATION ASSOCIATION FOR COTTONWOOD FILTERS.

M. VA WILL SHUT DOWN EXISTING UTILITY SYSTEM AS NECESSARY FOR CONTRACTOR TO PERFORM REQUIRED WORK. CONTRACTOR IS RESPONSIBLE FOR DRAINING EXISTING WET SYSTEMS, SUCH AS WATER, CHILLED WATER, HEATING WATER ETC. AS REQUIRED TO ACCOMPLISH NEW WORK. CONTRACTOR IS ALSO RESPONSIBLE FOR RE-FILLING SYSTEMS INCLUDING ADDING CHEMICAL AS REQUIRED. IT IS ACCEPTABLE TO SALVAGE EXISTING TREATED WATER IN CLEAN STORAGE CONTAINERS APPROVED BY THE VA, AND RE-INJECT IT INTO THE SYSTEM UPON COMPLETION OF WORK. ANY TREATED WATER NOT RE-INJECTED IS TO BE PROPERLY DISPOSED OF.

N. BALL VALVES SHALL BE USED FOR ISOLATION THROUGHOUT THE ENTIRE HYDRONIC SYSTEM REGARDLESS OF PIPE SIZE.

O. CONTRACTOR SHALL FURNISH AND INSTALL MANUAL VOLUME DAMPERS IN AREAS WITH LAY-IN CEILINGS AND DURO DYNE CONCEALED DAMPER SET COMPLETE WITH HEX NUT AND COVER PLATE IN AREAS WITH HARD CEILINGS.

SHEET NOTES:

1. PROVIDE 102mm (4"ø) DRYER VENT CONNECTION IN WALL. EXTEND 178x76 mm (7"x3") DRYER VENT UP IN WALL TO ATTIC SPACE. TRANSITION FROM 178x76 mm (7"x3") TO 102 mm (4"ø) VENT AND EXTEND THROUGH ROOF TO VENT CAP. PROVIDE FANTECH BOOSTER FAN MODEL # DBF4XLT COMPLETE WITH MOUNTING HARDWARE, AUTOMATIC PRESSURE SENSING SWITCH, WALL PANEL, AND VENT CAP. ROUTE VENT PIPING AND INSTALL BOOSTER FAN IN ATTIC SPACE PER MANUFACTURER'S REQUIREMENTS. RE: AM2.2 FOR CONTINUATION.

2. 457x457 mm (18"x18") OSA DUCT UP THROUGH ROOF. TRANSITION TO 'ERU-A1' OPENING. SEE SEET AM2.2 FOR CONTINUATION.

3. 457x457 mm (18"x18") EXHAUST DUCT UP THROUGH ROOF. TRANSITION TO 'ERU-A1' OPENING. SEE SEET AM2.2 FOR CONTINUATION.

4. COORDINATE EXACT LOCATION OF UNIT IN FIELD WITH STRUCTURE AND CELING TYPE. MAINTAIN ALL SERVICE CLEARANCES. SEE ARCHITECTURAL PLANS FOR SERVICE PANELS WHERE UNIT IS MOUNTED ABOVE CEILING.

REVISIONS	DATE

CSHQA
C.W. MOORE PLAZA
250 S. 5TH ST. BOISE, ID 83702
(208) 343-4635 FAX (208) 343-1858
http://www.cshqa.com

STEVEN HARDY, P.E.
C.W. MOORE PLAZA
250 S. 5TH ST
BOISE, IDAHO
PHONE: 208-343-4635 FAX: 208-343-1858

THESE DRAWINGS AND SPECIFICATIONS, AS INSTRUMENTS OF SERVICE, ARE AND SHALL REMAIN THE PROPERTY OF THE ARCHITECT / ENGINEER WHETHER THE PROJECT FOR WHICH THEY ARE MADE IS EXECUTED OR NOT. THESE DRAWINGS AND SPECIFICATIONS SHALL NOT BE USED BY ANY PERSON OR ENTITY ON OTHER PROJECTS, FOR ADDITIONS TO THIS PROJECT, OR COMPLETION OF THIS PROJECT WHEN PHASED WITHOUT THE WRITTEN CONSENT OF CSHQA OR ITS AFFILIATES. Copyright #2011

STAMP
PROFESSIONAL ENGINEER REGISTERED 8602 STATE OF IDAHO STEVEN G. HARDY 12/1/11

CAD FILE NAME: 531-319_AM2.1.DWG
XREF FILE NAME: 531-319_xA_30X42TLBK.DWG 531-319_xA_Base1.DWG

DRAWING TITLE: HVAC PLAN

APPROVED: CHIEF OF FACILITY MANAGEMENT SERVICE

APPROVED: MEDICAL CENTER DIRECTOR

PROJECT TITLE: BOISE VAMC NEW EXTENDED CARE UNIT BUILDING 'A' CLC

BUILDING NUMBER: 121 | CHECKED: SCH | DRAWN: RME

LOCATION: VAMC BOISE, IDAHO

DATE: 12/01/2011
PROJECT NO.: 531-319
DRAWING NO.: AM2.1
DWG 29 OF 58

DEPARTMENT OF VETERANS AFFAIRS

Username: jermey
Dec 01, 2011 - 11:36am
P:\28M03\Mechanical\Bldg A\531-319_AM2.1.dwg

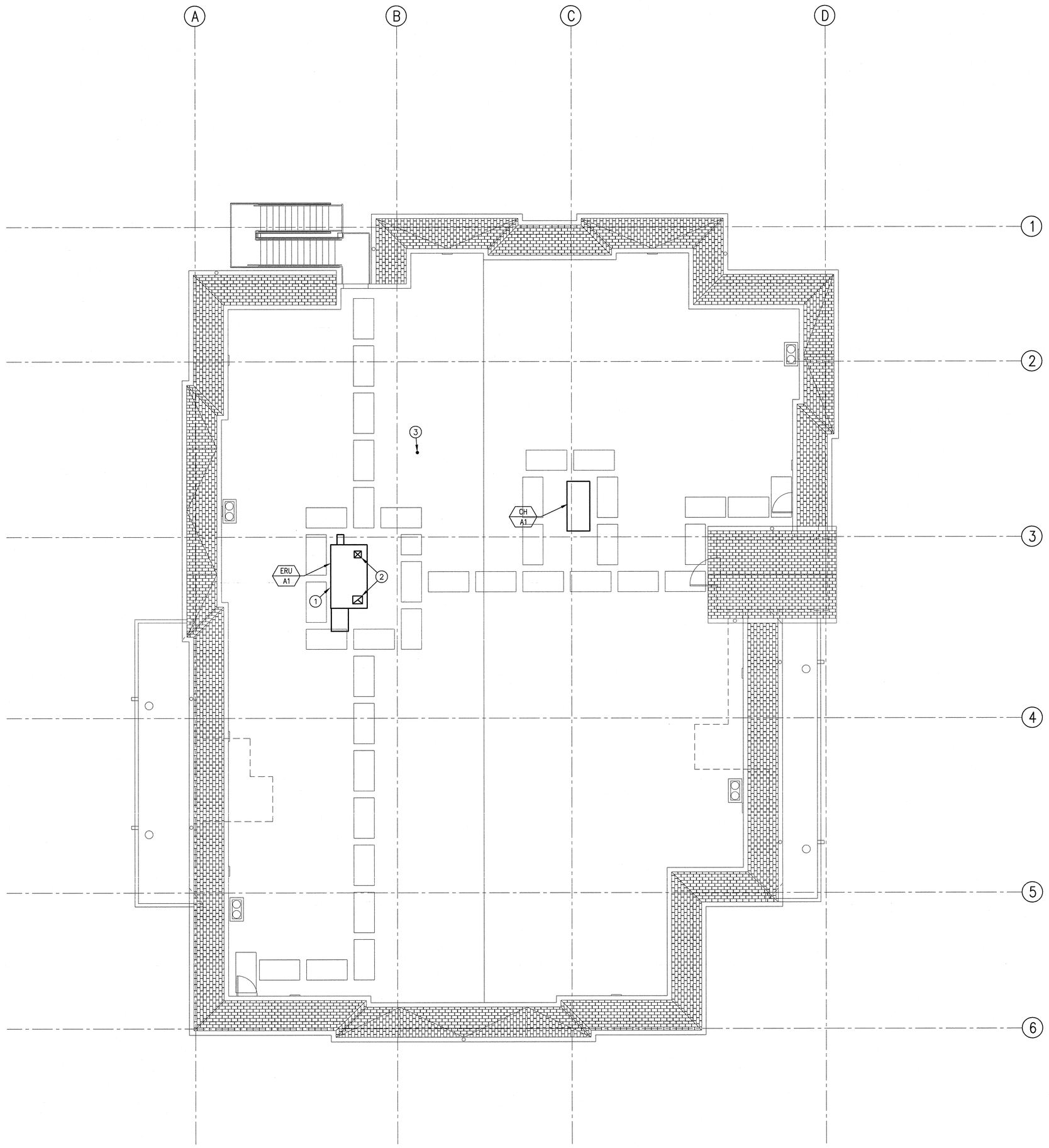

PLAN NORTH

1 HVAC ROOF PLAN

0' 4' 8' 12' 16' 20' 24' SCALE: 1/8 "=1'-0"

GENERAL NOTES:

A. ROUTE DUCTWORK IN COORDINATION WITH OTHER TRADES. HOLD DUCTWORK AS HIGH AS POSSIBLE AND ROUTE DUCTWORK WITHIN STRUCTURE WHERE POSSIBLE.

B. MOUNT TEMPERATURE SENSORS AT 1219 mm (48") AFF.

C. DUCT SIZES INDICATED FOR CONNECTION TO EQUIPMENT MAY DIFFER FROM EXACT UNIT CONNECTION DIMENSIONS. PROVIDE ALL NECESSARY TRANSITIONS/OFFSETS FROM DUCT SIZES LISTED TO UNIT CONNECTION.

D. FIRE DAMPERS SHALL BE 1-1/2 HOUR RATED UNLESS OTHERWISE NOTED.

E. CONTRACTOR SHALL PROVIDE ALL NECESSARY TRANSITIONS/OFFSETS TO AVOID CONFLICT WITH OTHER DUCTWORK, PIPING, STRUCTURE, ETC. AS PART OF THIS CONTRACT. WHEREVER AVAILABLE SPACE ALLOWS, OFFSETS SHALL BE MADE WITH 45 DEGREE ELBOWS WITH TURNING VANES.

F. ALL CEILING DIFFUSERS SHALL BE PROVIDED WITH 4-WAY THROW PATTERN UNLESS OTHERWISE NOTED.

G. PIPING PENETRATIONS THROUGH RATED ASSEMBLIES SHALL BE FIRESTOPPED IN ACCORDANCE NFPA-90A.

H. DUCTWORK AND PIPING SHOWN ARE FOR GENERAL ROUTING PURPOSES ONLY. CONTRACTOR SHALL CONFIRM EXACT ROUTING WITH OTHER TRADES AND PROVIDE ALL NECESSARY TRANSITIONS, HIGH POINT VENTS AND LOW POINT DRAINS AND OFFSETS NECESSARY TO INSTALL A COMPLETE AND FUNCTIONING SYSTEM.

I. THE CEILING SPACE FROM THE BOTTOM OF THE CEILING GRID TO A MINIMUM OF 152 mm (6") ABOVE THE BOTTOM OF THE CEILING GRID IS RESERVED FOR INSTALLATION OF CEILING MOUNTED ITEMS (I.E. LIGHT FIXTURES, SPEAKERS, DIFFUSERS). NO PIPING, DUCTWORK, CONDUITS, ETC., EXCEPT DROPS SERVING THE CEILING MOUNTED ITEMS, IS ALLOWED TO BE INSTALLED IN THIS SPACE, UNLESS OTHERWISE APPROVED BY THE CONTRACTING OFFICER.

J. CONTRACTOR IS REQUIRED TO FOLLOW ALL OSHA REGULATIONS CONCERNING CONSTRUCTION. THE SUPERINTENDENT IS REQUIRED TO HAVE COMPLETED, AS A MINIMUM, OSHA'S 30-HOUR TRAINING AND BE KNOWLEDGEABLE OF GENERAL SAFETY REQUIREMENTS FOR CONFINED SPACES, FALL PROTECTION, PERSONAL PROTECTIVE EQUIPMENT, TRENCHING, SCAFFOLDING, CRANES, ELECTRICAL, ETC. APPLICABLE SUBCONTRACTORS ARE TO HAVE A COMPETENT PERSON ON SITE WHEN REQUIRED BY OSHA. ALL OTHER WORKERS ON SITE ARE REQUIRED TO COMPLETE, AS A MINIMUM, OSHA'S 10-HOUR TRAINING.

K. IF ACCESSING A CONFINED SPACE, THE CONTRACTOR IS REQUIRED TO HAVE THEIR OWN CONFINED SPACE AIR MONITOR, TEST THE AIR PRIOR TO ENTERING ANY CONFINED SPACE AND FOLLOW THE VA CONFINED SPACE POLICY. IF THE CONTRACTOR MUST ENTER A SANITARY SEWER MANHOLE, IN ADDITION TO A CONFINED SPACE AIR MONITOR, THEY MUST HAVE PROPER OSHA RESCUE EQUIPMENT FOR A PERMIT REQUIRED CONFINED SPACE. WHERE IT IS NOT POSSIBLE FOR THE VA TO SHUTDOWN AN ELECTRICAL PANEL OR CIRCUIT, THE CONTRACTOR MUST PROVIDE AND USE THE APPROPRIATE SAFETY CLOTHING AND EQUIPMENT AS REQUIRED BY NFPA 70E. THE VA WILL BE MONITORING THE CONTRACTOR'S COMPLIANCE WITH OSHA REGULATIONS. FAILURE TO COMPLY IS GROUNDS FOR STOPPING WORK.

L. ALL CHILLER OR CONDENSING UNIT COILS ARE TO BE COMPLETELY PROTECTED USING AIR INTAKE FILTRATION SCREENS SPECIFICALLY DESIGNED FOR COTTONWOOD FILTRATION. THE SCREENS SHALL BE EASILY REMOVABLE WITH QUARTER TURN CONNECTIONS. THE SCREEN SHALL NOT VOID THE WARRANTY OF THE ORIGINAL EQUIPMENT MANUFACTURER. THE SCREENS SHALL HAVE A STATIC PRESSURE DROP LESS THAN 0.1 INCHES OF WATER GAGE, BE UV RESISTANT, FLAME RESISTANT, NON-ELECTRO STATIC, AND MOLD AND MILDEW RESISTANT. THE FILTERS SHALL BE IN ACCORDANCE WITH THE NATIONAL AIR FILTRATION ASSOCIATION FOR COTTONWOOD FILTERS.

M. VA WILL SHUT DOWN EXISTING UTILITY SYSTEM AS NECESSARY FOR CONTRACTOR TO PERFORM REQUIRED WORK. CONTRACTOR IS RESPONSIBLE FOR DRAINING EXISTING WET SYSTEMS, SUCH AS WATER, CHILLED WATER, HEATING WATER ETC. AS REQUIRED TO ACCOMPLISH NEW WORK. CONTRACTOR IS ALSO RESPONSIBLE FOR RE-FILLING SYSTEMS INCLUDING ADDING CHEMICAL AS REQUIRED. IT IS ACCEPTABLE TO SALVAGE EXISTING TREATED WATER IN CLEAN STORAGE CONTAINERS APPROVED BY THE VA, AND RE-INJECT IT INTO THE SYSTEM UPON COMPLETION OF WORK. ANY TREATED WATER NOT RE-INJECTED IS TO BE PROPERLY DISPOSED OF.

N. BALL VALVES SHALL BE USED FOR ISOLATION THROUGHOUT THE ENTIRE HYDRONIC SYSTEM REGARDLESS OF PIPE SIZE.

O. CONTRACTOR SHALL FURNISH AND INSTALL MANUAL VOLUME DAMPERS IN AREAS WITH LAY-IN CEILINGS AND DURO DYNE CONCEALED DAMPER SET COMPLETE WITH HEX NUT AND COVER PLATE IN AREAS WITH HARD CEILINGS.

SHEET NOTES:

1. MOUNT ENERGY RECOVERY UNIT ON FACTORY ROOF CURB. COORDINATE EXACT LOCATION WITH STRUCTURAL PLANS.
2. EXTEND OSA AND EXHAUST AIR DUCT DOWN THROUGH ROOF. PROVIDE FLEXIBLE CONNECTION TO UNIT, RE: 2/AM3.2 FOR CONNECTION DETAIL. SEE SHEET AM2.1 FOR SIZE AND CONTINUATION.
3. DRYER VENT UP FROM BELOW. PROVIDE AND INSTALL VENT CAP. RE: 1/AM2.1 FOR CONTINUATION.

Username: jermey
Date: 12/01/2011 11:36am
P:\28M03\Mechanical\Bldg A\531-319_AM2.2.dwg

REVISIONS | DATE

CSHQA
C.W. MOORE PLAZA
250 S. 5TH ST. BOISE, ID 83702
(208) 343-4635 FAX (208) 343-1858
http://www.cshqa.com

STEVEN HARDY, P.E.
C.W. MOORE PLAZA
250 S. 5TH ST
BOISE, IDAHO
PHONE: 208-343-4635 FAX: 208-343-1858

THESE DRAWINGS AND SPECIFICATIONS, AS INSTRUMENTS OF SERVICE, ARE AND SHALL REMAIN THE PROPERTY OF THE ARCHITECT / ENGINEER WHETHER THE PROJECT FOR WHICH THEY ARE MADE IS EXECUTED OR NOT. THESE DRAWINGS AND SPECIFICATIONS SHALL NOT BE USED BY ANY PERSON OR ENTITY ON OTHER PROJECTS, FOR ADDITIONS TO THIS PROJECT, OR COMPLETION OF THIS PROJECT WHEN PHASED WITHOUT THE WRITTEN CONSENT OF CSHQA OR ITS AFFILIATES. Copyright ©2011

STAMP
PROFESSIONAL ENGINEER REGISTERED STATE OF IDAHO STEVEN C. HARDY

CAD FILE NAME: 531-319_AM2.2.DWG
XREF FILE NAME: 531-319_xA_30X42TLBK.DWG
531-319_xA_ROOF PLAN.DWG

DRAWING TITLE: HVAC ROOF PLAN
APPROVED: CHIEF OF FACILITY MANAGEMENT SERVICE
APPROVED: MEDICAL CENTER DIRECTOR

PROJECT TITLE: BOISE VAMC NEW EXTENDED CARE UNIT BUILDING 'A' CLC
BUILDING NUMBER: 121
CHECKED: SCH
DRAWN: RME
LOCATION: VAMC BOISE, IDAHO

DATE: 12/01/2011
PROJECT NO.: 531-319
DRAWING NO.: AM2.2
DWG 30 OF 58

DEPARTMENT OF VETERANS AFFAIRS

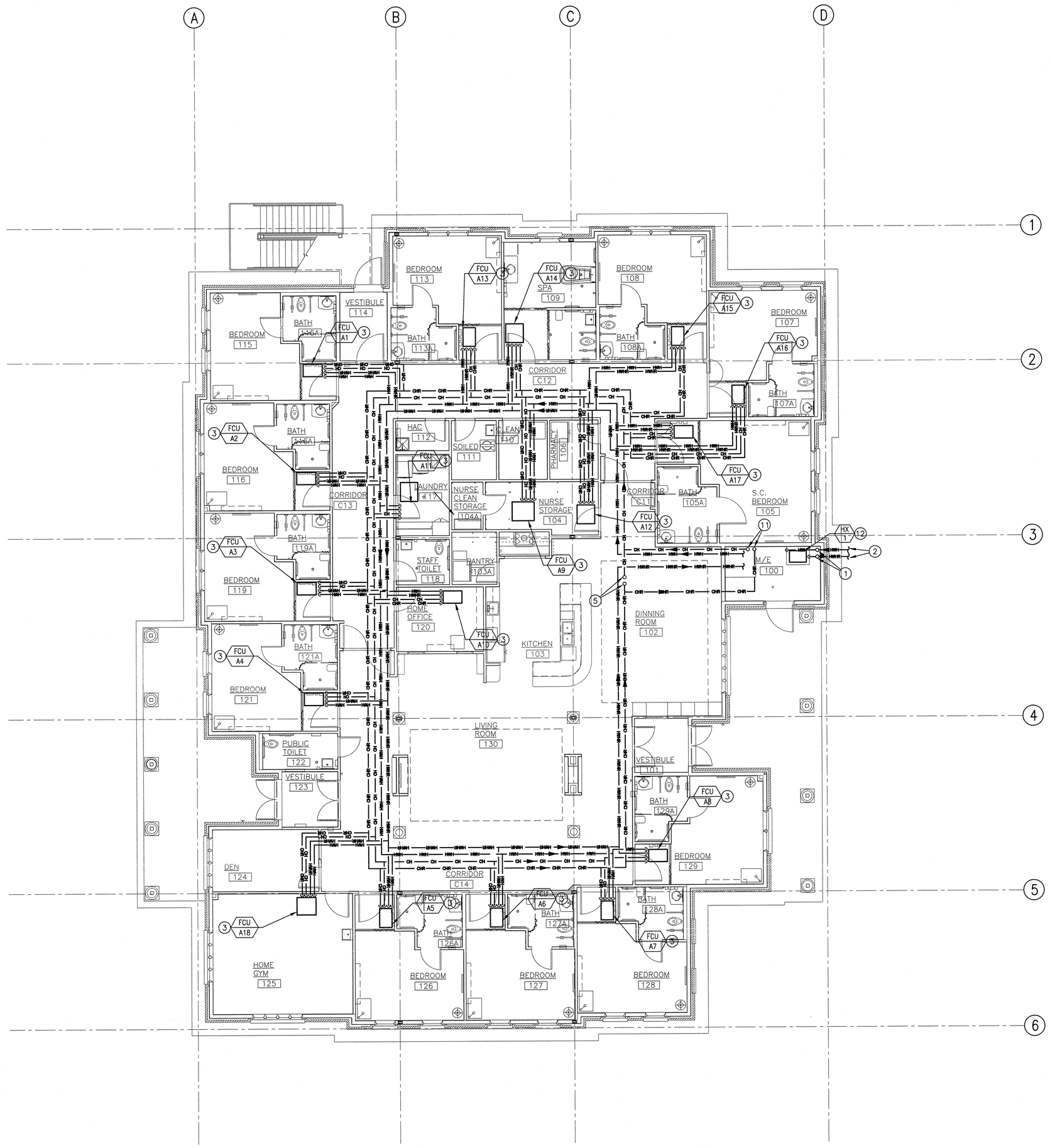

1 FIRST FLOOR HYDRONIC PLAN

0' 4' 8' 12' 16' 20' 24' SCALE: 1/8 "=1'-0"

PLAN NORTH

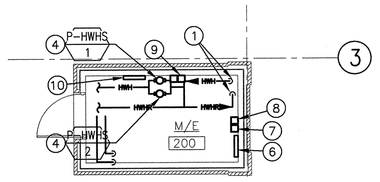

2 UPPER LEVEL HYDRONIC PLAN

0' 4' 8' 12' 16' 20' 24' SCALE: 1/8 "=1'-0"

PLAN NORTH

GENERAL NOTES:

A. ROUTE DUCTWORK IN COORDINATION WITH OTHER TRADES. HOLD DUCTWORK AS HIGH AS POSSIBLE AND ROUTE DUCTWORK WITHIN STRUCTURE WHERE POSSIBLE.

B. MOUNT TEMPERATURE SENSORS AT 1219 mm (48") AFF.

C. DUCT SIZES INDICATED FOR CONNECTION TO EQUIPMENT MAY DIFFER FROM EXACT UNIT CONNECTION DIMENSIONS. PROVIDE ALL NECESSARY TRANSITIONS/OFFSETS FROM DUCT SIZES LISTED TO UNIT CONNECTION.

D. FIRE DAMPERS SHALL BE 1-1/2 HOUR RATED UNLESS OTHERWISE NOTED.

E. CONTRACTOR SHALL PROVIDE ALL NECESSARY TRANSITIONS/OFFSETS TO AVOID CONFLICT WITH OTHER DUCTWORK, PIPING, STRUCTURE, ETC. AS PART OF THIS CONTRACT. WHEREVER AVAILABLE SPACE ALLOWS, OFFSETS SHALL BE MADE WITH 45 DEGREE ELBOWS WITH TURNING VANES.

F. ALL CEILING DIFFUSERS SHALL BE PROVIDED WITH 4-WAY THROW PATTERN UNLESS OTHERWISE NOTED.

G. PIPING PENETRATIONS THROUGH RATED ASSEMBLIES SHALL BE FIRESTOPPED IN ACCORDANCE NFPA-90A.

H. DUCTWORK AND PIPING SHOWN ARE FOR GENERAL ROUTING PURPOSES ONLY. CONTRACTOR SHALL CONFIRM EXACT ROUTING WITH OTHER TRADES AND PROVIDE ALL NECESSARY TRANSITIONS, HIGH POINT VENTS AND LOW POINT DRAINS AND OFFSETS NECESSARY TO INSTALL A COMPLETE AND FUNCTIONING SYSTEM.

I. THE CEILING SPACE FROM THE BOTTOM OF THE CEILING GRID TO A MINIMUM OF 152 mm (6") ABOVE THE BOTTOM OF THE CEILING GRID IS RESERVED FOR INSTALLATION OF CEILING MOUNTED ITEMS (I.E. LIGHT FIXTURES, SPEAKERS, DIFFUSERS). NO PIPING, DUCTWORK, CONDUITS, ETC., EXCEPT DROPS SERVING THE CEILING MOUNTED ITEMS, IS ALLOWED TO BE INSTALLED IN THIS SPACE, UNLESS OTHERWISE APPROVED BY THE CONTRACTING OFFICER.

J. CONTRACTOR IS REQUIRED TO FOLLOW ALL OSHA REGULATIONS CONCERNING CONSTRUCTION. THE SUPERINTENDENT IS REQUIRED TO HAVE COMPLETED, AS A MINIMUM, OSHA'S 30-HOUR TRAINING AND BE KNOWLEDGEABLE OF GENERAL SAFETY REQUIREMENTS FOR CONFINED SPACES, FALL PROTECTION, PERSONAL PROTECTIVE EQUIPMENT, TRENCHING, SCAFFOLDING, CRANES, ELECTRICAL, ETC. APPLICABLE SUBCONTRACTORS ARE TO HAVE A COMPETENT PERSON ON SITE WHEN REQUIRED BY OSHA. ALL OTHER WORKERS ON SITE ARE REQUIRED TO COMPLETE, AS A MINIMUM, OSHA'S 10-HOUR TRAINING.

K. IF ACCESSING A CONFINED SPACE, THE CONTRACTOR IS REQUIRED TO HAVE THEIR OWN CONFINED SPACE AIR MONITOR. TEST THE AIR PRIOR TO ENTERING ANY CONFINED SPACE AND FOLLOW THE VA CONFINED SPACE POLICY. IF THE CONTRACTOR MUST ENTER A SANITARY SEWER MANHOLE, IN ADDITION TO A CONFINED SPACE AIR MONITOR, THEY MUST HAVE PROPER OSHA RESCUE EQUIPMENT FOR A PERMIT REQUIRED CONFINED SPACE. WHERE IT IS NOT POSSIBLE FOR THE VA TO SHUTDOWN AN ELECTRICAL PANEL OR CIRCUIT, THE CONTRACTOR MUST PROVIDE AND USE THE APPROPRIATE SAFETY CLOTHING AND EQUIPMENT AS REQUIRED BY NFPA 70E. THE VA WILL BE MONITORING THE CONTRACTOR'S COMPLIANCE WITH OSHA REGULATIONS. FAILURE TO COMPLY IS GROUNDS FOR STOPPING WORK.

L. ALL CHILLER OR CONDENSING UNIT COILS ARE TO BE COMPLETELY PROTECTED USING AIR INTAKE FILTRATION SCREENS SPECIFICALLY DESIGNED FOR COTTONWOOD FILTRATION. THE SCREENS SHALL BE EASILY REMOVABLE WITH QUARTER TURN CONNECTIONS. THE SCREEN SHALL NOT VOID THE WARRANTY OF THE ORIGINAL EQUIPMENT MANUFACTURER. THE SCREENS SHALL HAVE A STATIC PRESSURE DROP LESS THAN 0.1 INCHES OF WATER GAGE, BE UV RESISTANT, FLAME RESISTANT, NON-ELECTRO STATIC, AND MOLD AND MILDEW RESISTANT. THE FILTERS SHALL BE IN ACCORDANCE WITH THE NATIONAL AIR FILTRATION ASSOCIATION FOR COTTONWOOD FILTERS.

M. VA WILL SHUT DOWN EXISTING UTILITY SYSTEM AS NECESSARY FOR CONTRACTOR TO PERFORM REQUIRED WORK. CONTRACTOR IS RESPONSIBLE FOR DRAINING EXISTING WET SYSTEMS, SUCH AS WATER, CHILLED WATER, HEATING WATER ETC. AS REQUIRED TO ACCOMPLISH NEW WORK. CONTRACTOR IS ALSO RESPONSIBLE FOR RE-FILLING SYSTEMS INCLUDING ADDING CHEMICAL AS REQUIRED. IT IS ACCEPTABLE TO SALVAGE EXISTING TREATED WATER IN CLEAN STORAGE CONTAINERS APPROVED BY THE VA, AND RE-INJECT IT INTO THE SYSTEM UPON COMPLETION OF WORK. ANY TREATED WATER NOT RE-INJECTED IS TO BE PROPERLY DISPOSED OF.

N. BALL VALVES SHALL BE USED FOR ISOLATION THROUGHOUT THE ENTIRE HYDRONIC SYSTEM REGARDLESS OF PIPE SIZE.

O. CONTRACTOR SHALL FURNISH AND INSTALL MANUAL VOLUME DAMPERS IN AREAS WITH LAY-IN CEILINGS AND DURO DYNE CONCEALED DAMPER SET COMPLETE WITH HEX NUT AND COVER PLATE IN AREAS WITH HARD CEILINGS.

SHEET NOTES:

1. ROUTE 51 mm (2") HWH & HWHR PIPING TO HEAT EXCHANGER FURNISHED BY PLUMBING CONTRACTOR, EXTEND 32 mm (1 1/4") HWH & HWHR UP TIGHT TO WALL THROUGH METAL GRATE FLOOR TO PUMPS ON SECOND LEVEL. RE: AM3.3 FOR PIPING SCHEMATIC.
2. 51 mm (2") HWH & HWHR FROM CAMPUS LOOP, RE: CIVIL PLAN, SDC 2.2 FOR CONTINUATION.
3. PROVIDE BRAIDED HOSE KITS COMPLETE WITH AUTOMATIC FLOW CONTROL VALVE, STRAINER & CONTROL VALVE. RE: AM3.1-1 FOR PIPING AND VALVE CONFIGURATION.
4. PUMPS SHALL BE MOUNTED ON SECOND LEVEL OF MECHANICAL SPACE.
5. 64 mm (2 1/2") CH & CHR PIPING DOWN FROM CH-A1 ON ROOF, EXTEND PIPING AS SHOWN. RE: AM3.4 FOR ADDITIONAL INFORMATION AND VALVE CONFIGURATION.
6. DDC CONTROL PANEL SHALL BE MOUNTED ON WALL OF SECOND LEVEL OF MECHANICAL SPACE, EXACT SIZE AND NUMBER OF PANELS SHALL BE COORDINATED IN FIELD WITH CONTROLS CONTRACTOR.
7. ONICON SYSTEM-10-BAC-IP BTU METER TO BE MOUNTED ON WALL OF SECOND LEVEL OF MECHANICAL SPACE. FURNISH BTU METER WITH OPTIONAL FLOW METER AND SUPPLY AND RETURN TEMPERATURE SENSORS. RE: 1/AM3.6.
8. REMOTE PANEL FOR CH-A1 MOUNTED ON WALL OF SECOND LEVEL OF MECHANICAL SPACE.
9. MOUNT P-HWHS-1/2 VFDS ON WALL OF SECOND LEVEL OF MECHANICAL SPACE.
10. MOUNT WATER TREATMENT SYSTEM ON WALL, RE: 6/AM3.1 FOR DETAIL.
11. 25 mm (1") CH AND CHR PIPING UP TO WATER TREATMENT SYSTEM ON UPPER LEVEL. RE: 2/AM2.3 FOR CONTINUATION.
12. DOMESTIC WATER HEATER HEAT EXCHANGER SHOWN FOR REFERENCE ONLY, COORDINATE WITH PLUMBING CONTRACTOR.

REVISIONS	DATE

CSHQA

C.W. MOORE PLAZA
250 S. 5TH ST. BOISE, ID 83702
(208) 343-4635 FAX (208) 343-1858
http://www.cshqa.com

STEVEN HARDY, P.E.
C.W. MOORE PLAZA
250 S. 5TH ST
BOISE, IDAHO
PHONE: 208-343-4635 FAX: 208-343-1858

THESE DRAWINGS AND SPECIFICATIONS, AS INSTRUMENTS OF SERVICE, ARE AND SHALL REMAIN THE PROPERTY OF THE ARCHITECT / ENGINEER WHETHER THE PROJECT FOR WHICH THEY ARE MADE IS EXECUTED OR NOT. THESE DRAWINGS AND SPECIFICATIONS SHALL NOT BE USED BY ANY PERSON OR ENTITY ON OTHER PROJECTS, FOR ADDITIONS TO THIS PROJECT, OR COMPLETION OF THIS PROJECT WHEN PHASED WITHOUT THE WRITTEN CONSENT OF CSHQA OR ITS AFFILIATES. Copyright ©2011

STAMP

PROFESSIONAL ENGINEER REGISTERED 6002 STATE OF IDAHO STEVEN C. HARDY 12.1.11

CAD FILE NAME:
531-319_AM2.3.DWG

XREF FILE NAME:
531-319_AM2.1.DWG
531-319_xA_30X42TLBK.DWG
531-319_xA_BASE1.DWG

DRAWING TITLE
HYDRONIC PLAN

APPROVED: CHIEF OF FACILITY MANAGEMENT SERVICE

APPROVED: MEDICAL CENTER DIRECTOR

PROJECT TITLE
BOISE VAMC
NEW EXTENDED CARE UNIT
BUILDING 'A' CLC

BUILDING NUMBER 121
CHECKED SCH
DRAWN RME
LOCATION VAMC BOISE, IDAHO

DATE 12/01/2011
PROJECT NO. 531-319
DRAWING NO. AM2.3
DWG 31 OF 58

DEPARTMENT OF VETERANS AFFAIRS

Username: jermey
Dec 01, 2011 - 11:35am
P:\CBM03\Mechanical\Bldg A\531-319_AM2.3.dwg

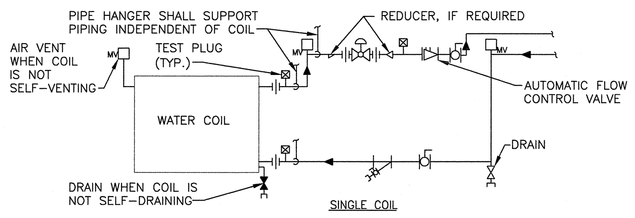

NOTES:

1. WHEN COIL IS INCLUDED IN CASING MOUNTED ON VIBRATION ISOLATORS THE FIRST 2 HANGERS FOR EACH PIPE SHALL BE SPRING & NEOPRENE TYPE. TYPE "H" FOR 100 MM (4") ø PIPE & SMALLER. TYPE "H-P" FOR 125 MM (5")ø PIPE & LARGER.
2. PIPING SHALL BE INSTALLED IN SUCH MANNER THAT IT WILL NOT BLOCK THE SWING OR USE OF ACCESS DOORS OR PANELS; NEITHER SHALL IT BLOCK THE SERVICING OF FILTERS, VALES, OR EQUIPMENT.

1 WATER COILS – PIPING CONNECTIONS
SCALE NTS

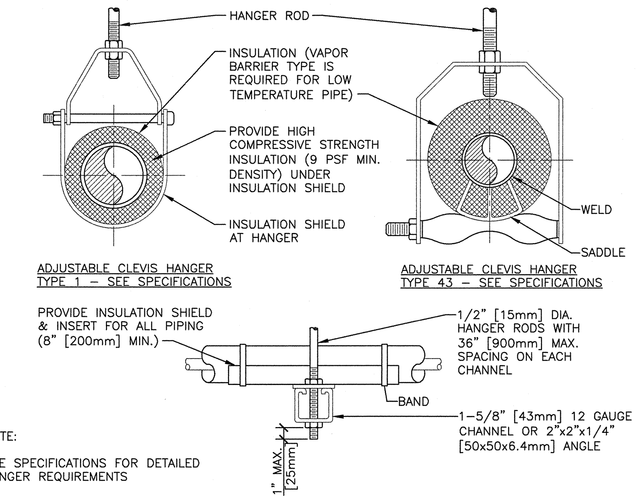

MAXIMUM PIPE/TUBING SUPPORT SPACING																			
NOM. SIZE	IN. [mm]	THRU 3/4 THRU [20]	1 [25]	1 1/4 [32]	1 1/2 [40]	2 [50]	2 1/2 [65]	3 [75]	4 [100]	5 [125]	6 [150]	8 [200]	10 [250]	12 [300]	14 [350]	16 [400]	18 [450]	20 [500]	24 [600]
PIPE	FT. [mm]	7 [2100]	7 [2100]	7 [2100]	9 [2700]	10 [3000]	11 [3400]	12 [3700]	14 [4100]	16 [4900]	17 [5200]	19 [5800]	22 [6700]	23 [7000]	25 [7600]	27 [8200]	28 [8500]	30 [9100]	32 [9600]
TUBING	FT. [mm]	5 FT [1500]	6 [1800]	7 [2100]	8 [2400]	8 [2400]	9 [2700]	10 [3000]	12 [3700]	13 [4000]	14 [4100]	16 [4900]	–	–	–	–	–	–	–
NOTE: FOR TRAPEZE HANGER TAKE SPACING OF SMALLEST SIZE ON TRAPEZE.																			

2 PIPE HANGERS
SCALE NTS

MIN. THRUST BLOCK BEARING AREA FT^2

PIPE DIA.	TEE/ DEAD END	CHANGE OF FLOW DIRECTION			
		90°	45°	22 1/2°	11 1/4°
4"	1.4	2.0	1.1	0.6	0.4
6"	2.8	4.0	2.2	1.6	1.0
8"	5.0	7.0	3.7	2.0	1.0
10"	8.0	10.3	5.6	2.9	1.0
12"	10.3	14.6	8.0	4.0	1.5

NOTE:

HORIZONTAL BEARING STRENGTH OF SOIL IS APPROXIMATELY 1500 LBS/FT^2.
RESULTANT FORCE AGAINST THRUST BLOCK GENERATED BY WATER (62.4 LBS/FT^3 DENSITY)
FLOWING AT A RATE OF 500 GPM AT 55 PSI IN 6" PIPE IS AS LISTED FOR THE FOLLOWING BENDS:

90 DEGREE=6000 LBS
45 DEGREE=3211 LBS
22.5 DEGREE=1655 LBS
11.25 DEGREE=831 LBS

RESULTANT FORCE = 2(PSI)*(IN^2)*SIN(ANGLE/2)*(SAFETY FACTOR OF 1.5)
EXAMPLE : FOR PRESSURE OF 55 PSI , PIPE DIA OF 6" AND ELL FITTING, RESULTANT FORCE = 6000 LBS , SO SINCE BEARING STRENGTH OF SOIL = 1500 LBS/ FT^2
6000 LBS/(1500 LBS/FT^2) = 4 FT^2 , A THRUST BLOCK AREA AGAINST SOIL OF 4 FT^2 IS NEEDED.

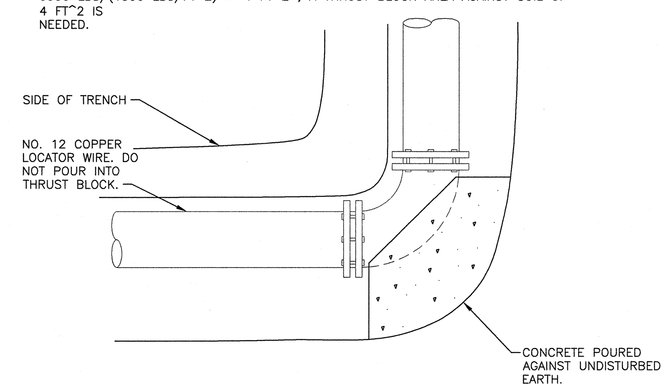

3 THRUST BLOCK DETAIL
SCALE NTS

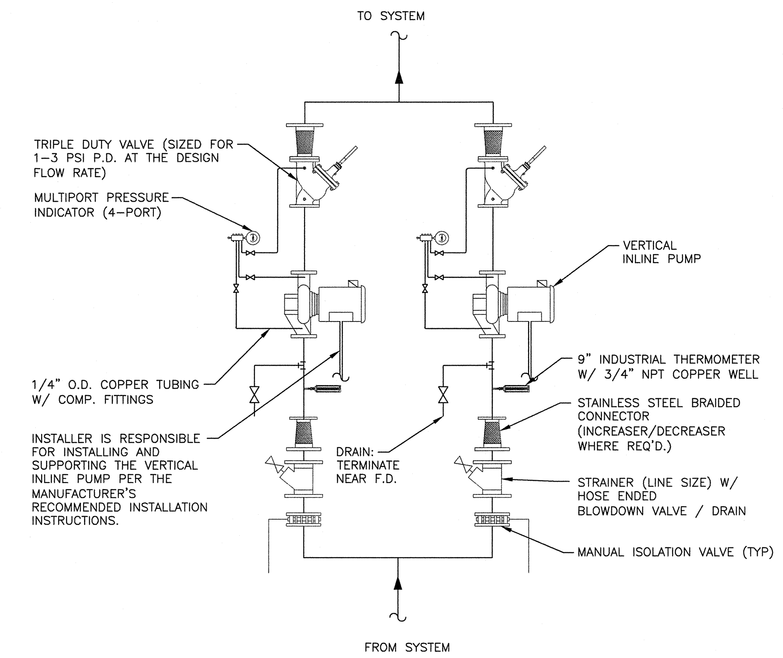

4 VERTICAL INLINE PUMP DETAIL
SCALE NTS

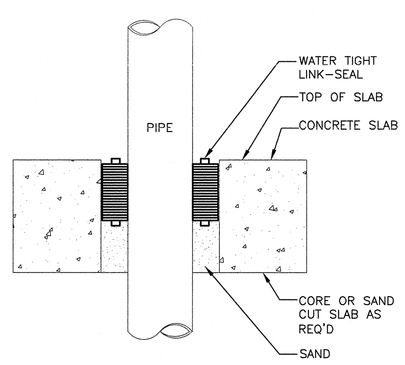

5 PIPE THRU SLAB ON GRADE DETAIL
SCALE NTS

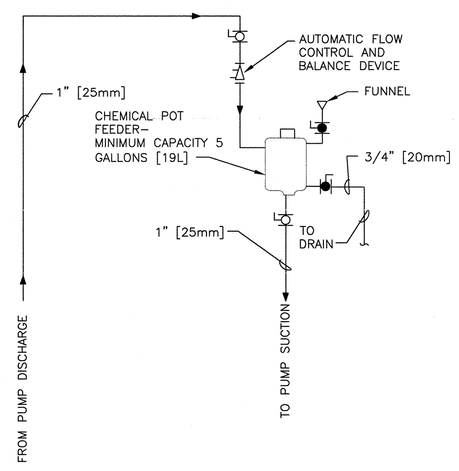

NOTE:
TOP OF CHEMICAL POT FEEDER TANK SHALL NOT BE MORE THAN 4'-0" [1200mm] ABOVE FINISHED FLOOR.

6 WATER TREATMENT – CLOSED SYSTEMS
SCALE NTS

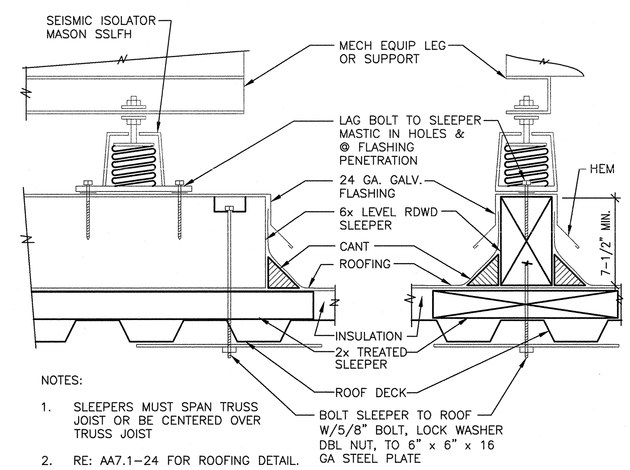

NOTES:

1. SLEEPERS MUST SPAN TRUSS JOIST OR BE CENTERED OVER TRUSS JOIST
2. RE: AA7.1-24 FOR ROOFING DETAIL.

7 ROOFTOP EQUIPMENT MOUNTING DETAIL
SCALE

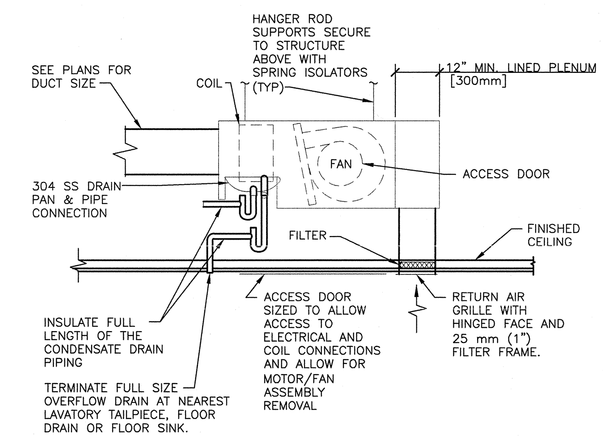

NOTES:

1. SIX INCH [150mm] PLENUM AS SHOWN SHALL BE SUPPLIED BY MANUFACTURER OF FAN COIL UNIT.
2. SEE DETAIL FOR SUPPLY & RETURN PIPING CONNECTIONS.
3. PROVIDE ACCESS FOR FILTER REMOVAL.
4. SEE FAN COIL UNIT SCHEDULE FOR PIPE SIZES.

8 FAN COIL UNIT – HORIZONTAL CONCEALED
SCALE NTS

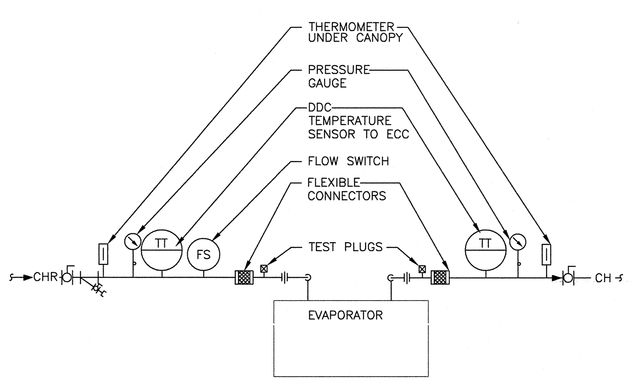

9 AIR COOLED CHILLER – PIPING CONNECTIONS
SCALE NTS

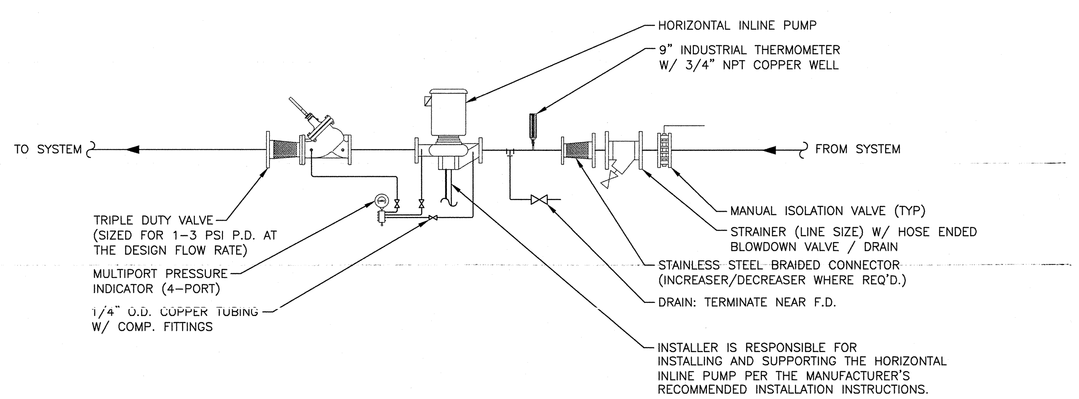

10 HORIZONTAL INLINE PUMP DETAIL
SCALE NTS

Username: jermey
Dec 01, 2011 - 11:35am
P:\V28M03\Mechanical\Bldg A\531-319_AM3.1.dwg

REVISIONS	DATE

CSHQA
C.W. MOORE PLAZA
250 S. 5TH ST. BOISE, ID 83702
(208) 343-4635 FAX (208) 343-1858
http://www.cshqa.com

STEVEN HARDY, P.E.
C.W. MOORE PLAZA
250 S. 5TH ST
BOISE, IDAHO
PHONE: 208-343-4635 FAX: 208-343-1858

THESE DRAWINGS AND SPECIFICATIONS, AS INSTRUMENTS OF SERVICE, ARE AND SHALL REMAIN THE PROPERTY OF THE ARCHITECT / ENGINEER WHETHER THE PROJECT FOR WHICH THEY ARE MADE IS EXECUTED OR NOT. THESE DRAWINGS AND SPECIFICATIONS SHALL NOT BE USED BY ANY PERSON OR ENTITY ON OTHER PROJECTS, FOR ADDITIONS TO THIS PROJECT, OR COMPLETION OF THIS PROJECT WHEN PHASED WITHOUT THE WRITTEN CONSENT OF CSHQA OR ITS AFFILIATES. Copyright 2011

STAMP
PROFESSIONAL ENGINEER REGISTERED 8002 STATE OF IDAHO STEVEN C. HARDY

CAD FILE NAME: 531-319_AM3.1.DWG
XREF FILE NAME: 531-319_xA_30X42TLBK.DWG

DRAWING TITLE: HVAC DETAILS

PROJECT TITLE: BOISE VAMC NEW EXTENDED CARE UNIT BUILDING 'A' CLC

DATE: 12/01/2011
PROJECT NO.: 531-319

APPROVED: CHIEF OF FACILITY MANAGEMENT SERVICE
APPROVED: MEDICAL CENTER DIRECTOR

BUILDING NUMBER	CHECKED	DRAWN
121	SCH	RME

LOCATION: VAMC BOISE, IDAHO

DRAWING NO.: AM3.1
DWG 32 OF 58

DEPARTMENT OF VETERANS AFFAIRS