# PLUMBING ABBREVIATIONS

| | |
|---|---|
| A/E | ARCHITECT / ENGINEER |
| AD | AREA DRAIN |
| AFF | ABOVE FINISH FLOOR |
| AFG | ABOVE FINISH GRADE |
| AG | AIR GAP |
| AP | ACCESS PANEL |
| AS | AUTOMATIC SPRINKLER |
| ASD | ADJUSTABLE SPEED DRIVES |
| ASD | AUTOMATIC SPRINKLER DRAIN |
| ASHRAE | AMERICAN SOCIETY HEATING, REFRIGERATION, AIR CONDITIONING ENGINEERS |
| ASME | AMERICAN SOCIETY MECHANICAL ENGINEERS |
| ASPE | AMERICAN SOCIETY PLUMBING ENGINEERS |
| ASR | AUTOMATIC SPRINKLER RISER |
| AV | ACID VENT |
| AW | ACID WASTE |
| BFP | REDUCED PRESSURE BACKFLOW PREVENTER |
| BHP | BREAK HORSEPOWER |
| BSP | BLACK STEEL PIPE |
| BT | BATHTUB |
| BTU | BRITISH THERMAL UNIT |
| BTUH | BRITISH THERMAL UNIT PER HOUR |
| C | CELSIUS |
| CFCI | CONTRACTOR FURNISHED CONTRACTOR INSTALLED |
| CGA | COMPRESSED GAS ASSOCIATION |
| CI | CAST IRON |
| CO | CLEANOUT |
| COTR | CONTRACTING OFFICER'S TECHNICAL REPRESENTATIVE |
| CS | CLINICAL SINK |
| CV | CONTROL VALVE |
| CW | COLD WATER |
| CWV | COMBINATION WASTE AND VENT |
| DDI | DEIONIZED WATER |
| DN | DOWN |
| DOE | DEPARTMENT OF ENERGY |
| DS | DOWNSPOUT |
| DW | DISHWASHER |
| DWG | DRAWING |
| DWH | DOMESTIC WATER HEATER |
| DWR | DRINKING WATER RETURN |
| DWS | DRINKING WATER SUPPLY |
| DWV | DRAIN WASTE VENT |
| EL | ELEVATION |
| EMCS | ENERGY MONOSERRAT AND CENTRAL SYSTEM |
| EPA | ENVIRONMENTAL PROTECTION AGENCY |
| EPACT | ENERGY POLICY ACT |
| ESC | ESCUTCHEON |
| ESH | EMERGENCY SHOWER |
| ET | EXPANSION TANK |
| EWC | ELECTRIC WATER COOLER |
| EWC | ELECTRIC WATER COOLER |
| EWH | ELECTRIC WATER HEATER |
| EWS | EYE WASH STATION |
| EX | EXISTING |
| F | FAHRENHEIT |
| FCO | FLOOR CLEANOUT |
| FCW | FILTERED COLD WATER |
| FD | FLOOR DRAIN |
| FDC | FIRE DEPARTMENT (HOSE) CONNECTION |
| FM | FLOW METER |
| FOP | FUEL OIL PUMP |
| FOR | FUEL OIL RETURN |
| FOS | FUEL OIL SUPPLY |
| FOV | FUEL OIL VENT |
| FS | FLOOR SINK |
| FS | FLOW SWITCH |
| FU | FIXTURE UNITS |
| G | NATURAL GAS |
| GAL | GALLON |
| G | GAS |
| GCO | GRADE CLEANOUTS |
| GPD | GALLONS PER DAY |
| GPH | GALLONS PER HOUR |
| GPM | GALLONS PER MINUTE |
| GPR | GAS PRESSURE REGULATOR |
| GRS | GAS REGULATOR STATION |
| GT | GREASE TRAP |
| GV | GAS VALVE |
| GVTR | GAS VENT THROUGH ROOF |
| GWH | GAS FIRED WATER HEATER |
| H&CW | HOT AND COLD WATER |
| HB | HOSE BIBB |
| HD | HUB DRAIN |
| HEX | HEAT EXCHANGER |
| HP | HORSEPOWER |
| HS | HAND SINK |
| HST | HOT WATER STORAGE TANK (DOMESTIC) |
| HW | HOT WATER (DOMESTIC) |
| HWB | HOT WATER BOILER |
| HWCP | HOT WATER CIRCULATING PUMP |
| HWP | HOT WATER PUMP |
| HWR | HOT WATER RETURN (DOMESTIC) |
| HYD | HYDRANT |
| ICW | INDUSTRIAL COLD WATER |
| INV | INVERT |
| IPC | INTERNATIONAL PLUMBING CODE |
| IRW | IRRIGATION WATER |
| IW | INDIRECT WASTE |
| IWH | INSTANTANEOUS WATER HEATER |
| IWR | INDUSTRIAL WATER RETURN |
| IWS | INDUSTRIAL WATER SUPPLY |
| KW | KILOWATT |
| KWHR | KILOWATT-HOUR |
| L/S | LITER PER SECOND |
| LA | LABORATORY AIR |
| LAV | LAVATORY |
| LBS/HR | POUNDS PER HOUR |
| LCW | LABORATORY COLD WATER |
| LHW | LABORATORY HOT WATER |
| LNG | LIQUID NATURAL GAS |
| LOX | LIQUID OXYGEN |
| LV | LABORATORY VACUUM |
| LW | LOW WATER |
| M | METER |
| MA | MEDICAL AIR |
| MAV | MANUAL AIR VENT |
| MBH | 1000 BTUH |
| MED | MEDICAL |
| MER | MECHANICAL EQUIPMENT ROOM |
| MH | MANHOLE |
| MHT | MALE HOSE THREAD |
| MOU | MEMORANDUM OF UNDERSTANDING |
| MSB | MOP SERVICE BASIN |
| MV | MEDICAL VACUUM |
| N2 | NITROGEN |
| N2O | NITROUS OXIDE |
| NC | NORMALLY CLOSED |
| NG | NATURAL GAS |
| NIC | NOT IN CONTRACT |
| NO | NORMALLY OPEN |
| NPW | NON POTABLE WATER |
| NTC | NOT TO SCALE |
| O2 | OXYGEN |
| OC | ON CENTER |
| OD | OUTSIDE DIAMETER |
| OFCI | OWNER FURNISHED CONTRACTOR INSTALLED |
| ODL | OVERFLOW DRAIN LEADER |
| ODP | OPEN DRIP PROOF |
| OR | OPERATING ROOM |
| OVFL | OVERFLOW |
| PA | PASCAL |
| PCW | PURIFIED COLD WATER |
| PD | PRESSURE DROP OR DIFFERENCE |
| PDI | PLUMBING AND DRAINAGE INSTITUTE |
| PET | PRESSURE EXPANSION TANK |
| PG | PRESSURE GAUGE |
| PP | PLUMBING PUMP |
| PPM | PARTS PER MILLION |
| PRS | PRESSURE REDUCING STATION |
| PRV | PRESSURE REDUCING VALVE |
| PSI | POUNDS PER SQUARE INCH |
| PSIA | POUNDS PER SQUARE INCH ATMOSPHERE |
| PSIG | POUNDS PER SQUARE INCH GAUGE |
| PTRV | PRESSURE TEMPERATURE RELIEF VALVE |
| PW | POTABLE WATER |
| RD | ROOF DRAIN |
| RDL | ROOF DRAIN LEADER |
| RL | ROOF LEADER |
| RO | REVERSE OSMOSIS WATER |
| RWL | RAIN WATER LEADER |
| SAN | SANITARY SEWER |
| SMACNA | SHEET METAL AND AIR CONDITIONING CONTRACTORS NATIONAL ASSOCIATION |
| SCFM | STANDARD CUBIC FOOT/MINUTE |
| SCW | SOFTENED COLD WATER |
| SDMH | STORM DRAIN MANHOLE |
| SLM | STANDARD LITERS PER MINUTE |
| SP | SUMP PUMP |
| SPR | SPRINKLER LINE |
| SQFT | SQUARE FEET |
| SS | STAINLESS STEEL |
| ST | STORAGE TANK |
| SW | STORM WATER |
| TCV | TEMPERATURE CONTROL VALVE |
| TD | TEMPERATURE DIFFERENCE |
| TD | TRENCH DRAIN |
| TDH | TOTAL DYNAMIC HEAD |
| TEMP | TEMPERATURE |
| TMV | THERMOSTATIC MIXING VALVE |
| TP | TRAP PRIMER |
| TSTAT | THERMOSTAT |
| TWR | TEMPERED WATER RETURN |
| TWS | TEMPERED WATER SUPPLY |
| TYP | TYPICAL |
| UFAS | UNIFORM FEDERAL ACCESSIBILITY STANDARDS |
| UPC | UNIFORM PLUMBING CODE |
| V | VENT |
| VAC | VACUUM |
| VB | VACUUM BREAKER |
| VCO | VACUUM CLEANER OUTLET |
| VP | VACUUM PUMP |
| VS | VENT STACK |
| VTR | VENT THROUGH ROOF |
| W | WASTE |
| WC | WATER CLOSET |
| WCO | WALL CLEANOUT |
| WG | WATER GAUGE |
| WH | WALL HYDRANT |
| WH | WATER HEATER |
| WHA | WATER HAMMER ARRESTER |
| WL | WATER LINE |
| WM | WATER METER |
| WPD | WATER PRESSURE DROP |
| WS | WASTE STACK |
| YCO | YARD CLEANOUT |
| YH | YARD HYDRANT |

# PLUMBING PIPING SYMBOLS

- GATE VALVE
- GLOBE VALVE
- GATE VALVE WITH 3/4 " HOSE ADAPTER
- CHECK VALVE
- ANGLE GLOBE VALVE
- BUTTERFLY VALVE
- BALL VALVE
- MODULATING CONTROL VALVE
- TWO POSITION CONTROL VALVE
- THREE-WAY MODULATING CONTROL VALVE
- THREE-WAY TWO POSITION CONTROL VALVE
- PRESSURE REGULATING VALVE
- AUTOMATIC FLOW CONTROL VALVE
- PRESSURE RELIEF VALVE
- MANUAL AIR VENT
- TEST PLUG (PRESSURE/TEMPERATURE)
- AUTOMATIC AIR VENT (AV)
- DIRECTION OF PIPE PITCH (DOWN)
- DIRECTION OF FLOW
- ANCHOR
- REDUCER OR INCREASER
- ECCENTRIC REDUCER
- TOP CONNECTION, 45° OR 90°
- BOTTOM CONNECTION, 45° OR 90°
- SIDE CONNECTION
- CAPPED OUTLET
- RISE OR DROP IN PIPE
- UNION
- PIPE UP
- PIPE DOWN
- POINT OF CONNECTION BETWEEN NEW AND EXISTING WORK
- LIMIT OF DEMOLITION
- INVERTED BUCKET TRAP SET INCLUDING PIPING ACCESSORIES
- FLOAT & THERMOSTATIC TRAP SET INCLUDING PIPING ACCESSORIES
- STRAINER
- THERMOMETER
- PRESSURE GAUGE
- (FE) FLOW ELEMENT
- FLOOR CLEAN OUT
- WALL CLEAN OUT
- HOSE BIB
- (C) FURNISHED AND INSTALLED BY CONTROLS CONTRACTOR
- (E) FURNISHED AND INSTALLED BY ELECTRICAL CONTRACTOR
- (M) FURNISHED AND INSTALLED BY MECHANICAL CONTRACTOR
- (M/E) FURNISHED BY MECH INSTALLED AND WIRED BY ELECTRICAL
- (C/M) FURNISHED BY CONTROLS. INSTALLED BY MECHANICAL
- (E/M) FURNISHED AND WIRED BY ELECTRICAL INSTALLED BY MECH.
- (M/C) FURNISHED AND INSTALLED BY MECHANICAL WIRED BY CONTROLS
- (C/E) FURNISHED BY CONTROLS WIRED AND INSTALLED BY ELECTRICAL

# PLUMBING CONTROL SYMBOLS

- PRESSURE GAUGE W/ RANGE INDICATED
- ELECTRICAL TERMINAL POINT
- ELECTRICAL WIRING AND NUMBER OF CONDUCTORS
- DISCONNECT SWITCH
- PNEUMATIC DAMPER ACTUATOR
- (TS) (ROOM OR UNIT#) WALL-MOUNT TEMPERATURE SENSOR
- TS TEMPERATURE SENSOR (DUCT OR PIPE MOUNTED)
- FMS WATER FLOW MEASURING STATION
- TS TEMPERATURE SENSOR (AVERAGING TYPE)
- THERMOMETER
- PRESSURE GAUGE
- CONDUCTOR CONTINUATION
- JUNCTION
- JUMP
- NUMBER OF CONDUCTORS (3 SHOWN)
- CONTACT (NO)
- NORMALLY OPEN ELECTRICAL CONTACT (NO)
- MOTOR (1ø)
- MOTOR (3ø)
- TRANSFORMER
- RTR ROUTER
- CPC CENTERAL PLANT CONTROLLER
- DPIT DIFFERENTIAL PRESSURE INDICATING TRANSMITTER
- DPT DIFFERENTIAL PRESSURE TRANSMITTER
- PS PRESSURE SENSOR
- TS DUCT MOUNTED TEMPERATURE TRANSMITTER
- FS FREEZE STAT
- BI BINARY INPUT
- BO BINARY OUTPUT
- AO ANALOG OUTPUT
- IO INPUT / OUTPUT
- AI ANALOG INPUT
- (A) AQUA STAT
- (M) WATER METER

# PIPING LEGEND

| | |
|---|---|
| — CW — CW — CW — | DOMESTIC COLD WATER, COLD WATER |
| — HW — HW — HW — | DOMESTIC HOT WATER, HOT WATER |
| — HWR — HWR — HWR — | DOMESTIC HOW WATER RETURN, HOT WATER RETURN |
| — SAN — SAN — SAN — | SANITARY SEWER |
| — V — V — V — | SANITARY VENT |
| — SEW — SEW — SEW — | STORM WATER |
| — MO — MO — MO — | MEDICAL OXYGEN |

# PLUMBING GENERAL NOTES

A. ALL WORK SHALL BE PERFORMED IN STRICT ACCORDANCE WITH ALL APPLICABLE STATE AND LOCAL CODES AND STANDARDS, INCLUDING IBC, IPC, NFPA.

B. ALL WORK SHALL BE PERFORMED IN ACCORDANCE WITH THE DEPARTMENT OF VETERANS AFFAIRS REQUIREMENTS.

C. PROVIDE SEAL BETWEEN WALLS AND PLUMBING FIXTURES AS PER CODE REQUIREMENTS.

D. COLD AND HOT WATER SUPPLY PIPING SIZES FOR FIXTURE CONNECTIONS ARE NOT SHOWN ON PLANS. SEE FIXTURE SCHEDULE FOR CONNECTION SIZES.

E. INSTALL ALL OVERHEAD PIPING AS CLOSE TO STRUCTURE AS POSSIBLE, OR AS DETAILED OTHERWISE.

F. LOCATE AND LABEL ALL VALVES FOR SERVICE ACCESSIBILITY. VALVES INSTALLED ABOVE CEILINGS SHALL BE ACCESSIBLE THRU CEILING. SEE DRAWINGS FOR LOCATIONS.

G. COORDINATE INSTALLATION WITH THE WORK OF OTHER TRADES PRIOR TO STARTING. IN THE EVENT THAT CONFLICTS ARE FOUND WITH THE WORK OF THE OTHER TRADES, BRING ALL SUCH CONFLICTS TO THE COTR'S ATTENTION FOR RESOLUTION PRIOR TO PROCEEDING WITH THE WORK IN THAT AREA. DEFICIENCIES CAUSED BY FAILURE TO PERFORM SUCH VERIFICATIONS SHALL BE CORRECTED AT NO ADDITIONAL EXPENSE TO OWNER. IMMEDIATELY NOTIFY COTR OF CONDITIONS IN CONFLICT WITH THE PLANS.

H. PROVIDE PIPING EQUIPMENT AND MATERIALS IN ACCORDANCE WITH APPLICABLE PLUMBING CODE REGULATIONS AND STANDARDS, AUTHORITIES HAVING JURISDICTION, OR AS OTHERWISE RECOMMENDED OR DIRECTED BY MANUFACTURERS.

I. COORDINATE INSTALLATION OF PIPING BELOW AND ABOVE GRADE WITH STRUCTURAL COMPONENTS AND OTHER SYSTEM INSTALLATIONS.

J. COORDINATE ALL FIXTURES, EQUIPMENT AND ROUGH-IN CONNECTION LOCATIONS AND SIZES WITH ARCHITECTURAL DRAWINGS, OWNER AND EQUIPMENT SUPPLIER PRIOR TO INSTALLATION.

K. PROVIDE SEISMIC RESTRAINTS FOR ALL PIPE AND EQUIPMENT AS RECOMMENDED IN SMACNA "SEISMIC RESTRAINT MANUAL GUIDELINES FOR MECHANICAL EQUIPMENT", LATEST EDITION.

L. ALL PIPING SHALL BE CONCEALED IN WALLS OR ABOVE CEILINGS UNLESS NOTED OTHERWISE.

M. PRIOR TO BIDDING, OBTAIN A COPY OF THE SPECIFICATIONS AND PLANS,.

N. PIPING PENETRATIONS THROUGH RATED ASSEMBLIES SHALL BE FIRESTOPPED IN ACCORDANCE WITH 2009 NFPA 101 SECTION 8.3.5

O. ALL PIPING IN FINISHED ROOMS OR SPACES SHALL BE CONCEALED IN A FURRED CHASE OR ABOVE THE HARD SUSPENDED CEILING.

P. ACCESS PANELS IN HARD SUSPENDED CEILINGS ARE REQUIRED FOR ALL VALVES, TRAPS, CLEANOUTS, CONTROLS, ETC. ACCESS PANELS SHALL BE FURNISHED AND INSTALLED UNDER THE ARCHITECTURAL SPECIFICATIONS.

Q. SEE SPECIFICATIONS FOR FURTHER REQUIREMENTS.

R. THE CEILING SPACE FROM THE BOTTOM OF THE CEILING GRID TO A MINIMUM OF 6" ABOVE THE BOTTOM OF THE CEILING GRID IS RESERVED FOR INSTALLATION OF CEILING MOUNTED ITEMS (I.E. LIGHT FIXTURES, SPEAKERS, DIFFUSERS). NO PIPING, DUCTWORK, CONDUITS, ETC., EXCEPT DROPS SERVING THE CEILING MOUNTED ITEMS, IS ALLOWED TO BE INSTALLED IN THIS SPACE, UNLESS OTHERWISE APPROVED BY THE RESIDENT ENGINEER.

S. CONTRACTOR IS REQUIRED TO FOLLOW ALL OSHA REGULATIONS CONCERNING CONSTRUCTION. THE SUPERINTENDENT IS REQUIRED TO HAVE COMPLETED, AS A MINIMUM, OSHA'S 30-HOUR TRAINING AND BE KNOWLEDGEABLE OF GENERAL SAFETY REQUIREMENTS FOR CONFINED SPACES, FALL PROTECTION, PERSONAL PROTECTIVE EQUIPMENT, TRENCHING, SCAFFOLDING, CRANES, ELECTRICAL, ETC. APPLICABLE SUBCONTRACTORS ARE TO HAVE A COMPETENT PERSON ON SITE WHEN REQUIRED BY OSHA. ALL OTHER WORKERS ON SITE ARE REQUIRED TO COMPLETE, AS A MINIMUM, OSHA'S 10-HOUR TRAINING.

T. IF ACCESSING A CONFINED SPACE, THE CONTRACTOR IS REQUIRED HAVE THEIR OWN CONFINED SPACE AIR MONITOR, TEST THE AIR PRIOR TO ENTERING ANY CONFINED SPACE AND FOLLOW THE VA CONFINED SPACE POLICY. IF THE CONTRACTOR MUST ENTER A SANITARY SEWER MANHOLE, IN ADDITION TO A CONFINED SPACE AIR MONITOR, THEY MUST HAVE PROPER OSHA RESCUE EQUIPMENT FOR A PERMIT REQUIRED CONFINED SPACE. WHERE IT IS NOT POSSIBLE FOR THE VA TO SHUTDOWN AN ELECTRICAL PANEL OR CIRCUIT, THE CONTRACTOR MUST PROVIDE AND USE THE APPROPRIATE SAFETY CLOTHING AND EQUIPMENT AS REQUIRED BY NFPA 70E. THE VA WILL BE MONITORING THE CONTRACTOR'S COMPLIANCE WITH OSHA REGULATIONS. FAILURE TO COMPLY IS GROUNDS FOR STOPPING WORK.

U. SINCE WORK WILL TAKE PLACE IN A HOSPITAL CAMPUS, THERE IS THE POSSIBILITY OF THE CONTRACTOR COMING IN CONTACT WITH BLOOD AND BODY FLUIDS WHENEVER WORKING ON THE SANITARY SEWER SYSTEM. CONTRACTOR IS REQUIRED TO PROVIDE AND USE APPROPRIATE PERSONAL PROTECTIVE EQUIPMENT WHENEVER WORKING ON THE SANITARY SEWER SYSTEM TO PREVENT EXPOSURE TO THEIR EMPLOYEES.

REVISIONS | DATE

CSHQA
C.W. MOORE PLAZA
250 S. 5TH ST. BOISE, ID 83702
(208) 343-4635 FAX (208) 343-1858
http://www.cshqa.com

STEVEN HARDY, P.E.
C.W. MOORE PLAZA
250 S. 5TH ST
BOISE, IDAHO
PHONE: 208-343-4635 FAX: 208-343-1858

THESE DRAWINGS AND SPECIFICATIONS, AS INSTRUMENTS OF SERVICE, ARE AND SHALL REMAIN THE PROPERTY OF THE ARCHITECT / ENGINEER WHETHER THE PROJECT FOR WHICH THEY ARE MADE IS EXECUTED OR NOT. THESE DRAWINGS AND SPECIFICATIONS SHALL NOT BE USED BY ANY PERSON OR ENTITY ON OTHER PROJECTS, FOR ADDITIONS TO THIS PROJECT, OR COMPLETION OF THIS PROJECT-WHEN PHASED-WITHOUT THE WRITTEN CONSENT OF CSHQA OR ITS AFFILIATES. Copyright ©2011

STAMP: PROFESSIONAL ENGINEER, REGISTERED, 8002, STATE OF IDAHO, STEVEN C. HARDY

CAD FILE NAME: 531-319_AP0.1.DWG
XREF FILE NAME: 531-319_xA_30X42TBLK.DWG

DRAWING TITLE: PLUMBING COVER SHEET

APPROVED: CHIEF OF FACILITY MANAGEMENT SERVICE

APPROVED: MEDICAL CENTER DIRECTOR

PROJECT TITLE: BOISE VAMC NEW EXTENDED CARE UNIT BUILDING 'A' CLC

BUILDING NUMBER: 121 | CHECKED: SCH | DRAWN: RME

LOCATION: VAMC BOISE, IDAHO

DATE: 12/01/2011
PROJECT NO.: 531-319
DRAWING NO.: AP0.1
DWG 38 OF 58

DEPARTMENT OF VETERANS AFFAIRS

Username: jermey
Dec 01, 2011 - 11:13am
P:\28M03\Plumbing\BLDG A\531-319_AP0.1.dwg

# PLUMBING FIXTURE SCHEDULE

| FIXTURE | | | | TRIM | | | CONNECTIONS | | | | REMARKS |
|---|---|---|---|---|---|---|---|---|---|---|---|
| MARK | ITEM | MFGR | MODEL | ITEM | MFGR | MODEL | CW, mm (IN) | HW, mm (IN) | W, mm (IN) | V, MM (IN) | |
| P-101 | UFAS WATER CLOSET (FLOOR-MTD) | AMERICAN STANDARD | 3043.001 | FLUSH VALVE | ZURN | Z6000AV-HET | 25 (1) | – | 102 (4) | 51 (2) | VITREOUS CHINA, FLOOR MOUNTED, WATER CLOSET WITH SIPHON-JET ACTION. FURNISH WITH 4.85 L/FLUSH (1.28 GPF) MANUAL OPERATED FLUSH VALVE WITH METAL VALVE COVER AND BENEKE SEAT (NO. 721). |
| P-301 | SPA TUB (1) | – | OWNER FURNISHED THERAPY TUB | | | | 19 (3/4) | 19 (3/4) | 51 (2) | 51 (2) | |
| P-401 | UFAS LAVATORY (OVAL UNDERMOUNT) (1) | – | INTEGRAL TO COUNTERTOP | FAUCET | SYMMONS | S-20-FR-ISP | 13 (1/2) | 13 (1/2) | 51 (2) | 38 (1-1/2) | OVAL LAVATORY INTEGRAL TO COUNTER TOP. FURNISH WITH DECK MOUNTED CHROME PLATED WRIST LEVER OPERATED FAUCET, 1.9 L/min (0.5 GPM) VANDAL RESISTANT AERATOR, SET MIXING VALVE TO 37.8° C (100° F). INSULATE CW, HW, AND SS LINES FOR ADA COMPLIANCE. UFAS COMPLIANT (BARRIER-FREE). |
| P-415 | UFAS LAVATORY (WALL MOUNTED) (1) | AMERICAN STANDARD | 0356.041 | FAUCET | SYMMONS | S-20-FR-ISP | 13 (1/2) | 13 (1/2) | 51 (2) | 38 (1-1/2) | WALL MOUNTED VITREOUS CHINA LAVATORY. FURNISH WITH DECK MOUNTED CHROME PLATED WRIST LEVER OPERATED FAUCET, 1.9 L/min (0.5 GPM) VANDAL RESISTANT AERATOR, SET MIXING VALVE TO 37.8° C (100° F). INSULATE CW, HW, AND SS LINES FOR ADA COMPLIANCE. UFAS COMPLIANT (BARRIER-FREE). |
| P-502 | SERVICE SINK | ACORN | THS-24 | FAUCET | AMERICAN STANDARD | 8354.112 | 19 (3/4) | 19 (3/4) | 76 (3) | 51 (2) | FLOOR MOUNTED TERRAZZO SERVICE SINK. FURNISH WITH STAINLESS STEEL RIM CAP, BEEHIVE DOME STRAINER, 610 mm (2 FT) HOSE WITH WALL HOOK; AND WALL MOUNTED FAUCET WITH TOP BRACE, STOPS, VACUUM BREAKER, 19 mm (3/4") THREADED HOSE OUTLET, AND PAIL HOOK. |
| P-521 | LAUNDRY TUB | FIAT | TAT1 | FURNISH WITH TUB | | | 13 (1/2) | 13 (1/2) | 51 (2) | 51 (2) | HEAVY DUTY POLYETHYLENE, SINGLE BOWL TUB WITH LEGS. FURNISH WITH TAT1 HARDWARE PACKAGE AND FL7/P1/SF1F SOFTWARE PACKAGE. |
| P-528 | SINGLE COMP KIT (1) | ELKAY | ELUHAD2115 | FAUCET | SYMMONS | S-26-ISP | 13 (1/2) | 13 (1/2) | 51 (2) | 51 (2) | SINGLE BOWL UNDERMOUNT STAINLESS STEEL SINK 140 mm (5 1/2") DEEP, FURNISH LK99 DRAIN, DECK MOUNTED SINGLE LEVER OPERATED FAUCET WITH PULL OUT SPRAY HOSE AND VACUUM BREAKER. |
| P-550 | DOUBLE COMP KIT (1) | ELKAY | ELUHAD3216 | FAUCET | SYMMONS | S-26-ISP | 13 (1/2) | 13 (1/2) | 51 (2) | 51 (2) | 2-COMPARTMENT UNDERMOUNT STAINLESS STEEL SINK 140 mm (5 1/2") DEEP, FURNISH LK99 DRAIN, DECK MOUNTED SINGLE LEVER OPERATED FAUCET WITH PULL OUT SPRAY HOSE AND VACUUM BREAKER. |
| P-701 | UFAS SHOWER (1) | ACORN | 538-ADA-F-G-LFS -LGB-LRD-SB | – | – | – | 13 (1/2) | 13 (1/2) | – | – | SURFACE-MTD SHOWER WITH FLANGED SHOWER HEAD, DIVERTER VALVE, HAND SHOWER WITH METAL FLEX HOSE AND VACUUM BREAKER, 610 mm (24") SLIDE BAR, TEMPERATURE BALANCING MIXING VALVE WITH INTEGRAL SERVICE STOPS. UFAS COMPLIANT (BARRIER FREE). |
| P-801 | HOSE BIB (NON FREEZE) | WOODFORD | 65P | – | – | – | 19 (3/4) | – | – | – | FREEZELESS WALL HYDRANT WITH CHROME FINISH, ANITSIPHON VACUUM BREAKER, AND KEYED OPERATOR. |
| P-802 | HOSE BIB (INTERIOR) | WOODFORD | B24 | – | – | – | 19 (3/4) | – | – | – | INTERIOR WALL HYDRANT WITH POLISHED CHROME FINISH, ANITSIPHON VACUUM BREAKER, AND KEYED OPERATOR. |
| P-803 | HOSE BIB (ROOF MOUNTED NON FREEZE) | WOODFORD | RHY2-MS | – | – | – | 19 (3/4) | – | 13 (1/2) | – | ROOF MOUNTED HYDRANT WITH ANITSIPHON VACUUM BREAKER, AND KEYED OPERATOR. |
| P-808 | WASHER BOX | GUY GRAY | MWB | – | – | – | 13 (1/2) | 13 (1/2) | 51 (2) | – | RECESSED POWDER COATED METAL WASHER BOX, 1/4 TURN FITTINGS AND SLIPNUT DRAIN KIT. MOUNT FIXTURE FLUSH TO WALL AT 1219 mm (48") AFF TO BOTTOM OF BOX. |
| P-809 | WATER BOX | GUY GRAY | MIB1 | – | – | – | 13 (1/2) | – | – | – | RECESSED POWDER COATED METAL WATER BOX, 1/4 TURN VALVE. MOUNT FIXTURE FLUSH TO WALL AT 305 mm (12") AFF TO BOTTOM OF BOX. |
| FD-A | FLOOR DRAIN (ROUND-INTERIOR) | J.R. SMITH | 2005YA-P050-NB | – | – | – | – | – | 51 (2) | 38 (1-1/2) | CAST IRON BODY WITH ADJUSTABLE STRAINER HEAD. FURNISH WITH ROUND TOP, 13 mm (1/2") CW TRAP PRIMER CONNECTION, AND NICKEL BRONZE STRAINER. |
| FS-S | FLOOR SINK | J.R. SMITH | 3150Y-12 | – | – | – | – | – | 51 (2) | 51 (2) | FURNISH 305 mm (12") X 305 mm (12") X 203 mm (8") FLOOR SINK WITH CAST IRON BODY AND ACID RESISTANT ENAMEL FINISH. FURNISH WITH NICKEL BRONZE RIM AND 1/2 GRATE. |
| MO-1 | MEDICAL OXYGEN | CHEMETRON | SERIES 500 | – | – | – | – | – | – | – | FURNISH WITH STAINLESS STEEL FINISH PLATE, COLOR CODED GAS IDENTIFICATION INSERT. |
| MS-1 | MIXING STATION | POWERS | PSKCBB3B | – | – | – | 32 (1 1/4) | 32 (1 1/4) | – | – | FURNISH MIXING STATION WITH PANEL, AUTOMATIC BALANCING VALVE, AQUASTAT AND AQUASENTRY 2 CONTROL PACKAGE AND B&G LR15 OIL LUBE CIRCULATION PUMP. |
| OD-1 | OVERFLOW DRAIN | J.R. SMITH | 1080Y-R-C-CID | – | – | – | – | – | 76 (3) | – | CAST IRON OVERFLOW DRAIN WITH 51 mm (2") EXTERIOR WATER DAM, COMBINATION FLASHING CLAMP/GRAVEL STOP, AND BOTTOM NO-HUB OUTLET. FURNISH WITH A CAST IRON DOME, SUMP RECEIVER, AND UNDER DECK CLAMP. |
| RD-1 | ROOF DRAIN | J.R. SMITH | 1010Y-R-C-CID | – | – | – | – | – | 76 (3) | – | CAST IRON ROOF DRAIN WITH COMBINATION FLASHING CLAMP/GRAVEL STOP, AND BOTTOM NO-HUB OUTLET. FURNISH WITH A CAST IRON DOME, SUMP RECEIVER, AND UNDER DECK CLAMP. |
| SA-1 | SHOCK ARRESTER | J.R. SMITH | 5005 THROUGH 5050 | – | – | – | 19 (3/4) 25 (1) | – | – | – | STAINLESS STEEL PRECHARGED HYDROTROL WATER HAMMER ARRESTER. SIZE SHOCK ARRESTER FOR THE FIXTURES SERVED AND INSTALL PER MANUFACTURER'S INSTALLATION INSTRUCTIONS. |
| TP-2 | TRAP PRIMER (AUTO-PNUEMATIC) | PPP | P-1 | – | – | – | 13 (1/2) | – | – | – | FURNISH TRAP PRIMER WITH DISTRIBUTION UNIT (NO. DU-U) FOR PRIMING FOUR (4) FLOOR DRAINS. |

TYPICAL REQUIREMENTS:

A. RE: DIVISION 22 SECTIONS "PLUMBING FIXTURES", "FACILITY SANITARY SEWERAGE", AND "FACILITY STORM DRAINAGE" FOR FIXTURE DESCRIPTION AND SPECIFICATIONS.

(X) REMARKS:

1. FURNISH WITH UNDERSINK MIXING VALVE, POWERS E-480 (MIN FLOW 1.9 L/M (.5) GPM)

# PUMP SCHEDULE

| REFERENCE | | | | PUMP | | | | | | | | | ELECTRICAL | | | | MOUNTING | | |
|---|---|---|---|---|---|---|---|---|---|---|---|---|---|---|---|---|---|---|---|
| MARK | MFGR | MODEL | SERVICE | TYPE | SPEED, RPM | CAPACITY, L/M (GPM) | TOTAL HEAD, KPA (FT) | OP. TEMP., deg C (F) | IMPELLER SIZE, MM (IN) | EFFICIENCY (%) | CONNECTIONS, MM (IN) SUCT | CONNECTIONS, MM (IN) DISCH | MOTOR KW (HP) | VOLTS | PHASE | MOTOR TYPE | TYPE | WEIGHT KG (LBS) | REMARKS |
| P-HW-1 | B&G | SERIES 60 1-1/4x1-1/4x5-1/4 | BUILDING A DW STORAGE TANK | IN-LINE | 1750 | 151 (40) | 159 (10) | 66 (150) | 95 (3.75) | 52 | 32 (1.25) | 32 (1.25) | .19 (.25) | 115 | 1 | ODP | IN-LINE | 23 (50) | (1) |
| P-HW-2 | B&G | SERIES 60 1-1/4x1-1/4x5-1/4 | BUILDING A DW STORAGE TANK | IN-LINE | 1750 | 151 (40) | 159 (10) | 66 (150) | 95 (3.75) | 52 | 32 (1.25) | 32 (1.25) | .19 (.25) | 115 | 1 | ODP | IN-LINE | 23 (50) | (1) |

TYPICAL REQUIREMENTS:

A. IMPELLER SIZE SCHEDULED IS APPROXIMATE. FINAL SIZE SHALL BE DETERMINED BY MANUFACTURER BASED ON SCHEDULED POINT OF OPERATION.

(X) REMARKS:

1. PUMP SIZING AND PERFORMANCE BASED ON 100% FRESH WATER SOLUTION.

# DOMESTIC WATER STORAGE TANK SCHEDULE

| REFERENCE | | | | | | | | CONNECTIONS | | | |
|---|---|---|---|---|---|---|---|---|---|---|---|
| MARK | ITEM | MFGR | MODEL | TYPE | LOCATION | DETAIL REFERENCE | STORAGE L (GAL) | CW, mm (IN) | HW, mm (IN) | OPERATING WT. kG (LBS) | REMARKS |
| ST-1 | STORAGE TANK | A.O. SMITH | TJV-350 ASME | VERTICAL STORAGE TANK | MECHANICAL ROOM | 5/AP3.1 | 1325 (350) | 64 (2.5) | 64 (2.5) | 1840 (4005) | |

# HEAT EXCHANGER SCHEDULE

| REFERENCE | | | | | HOT SIDE | | | | COOL SIDE | | | | | |
|---|---|---|---|---|---|---|---|---|---|---|---|---|---|---|
| MARK | MANUFACTURER | MODEL # | TYPE | SERVICE | L/M (GPM) | EWT, deg C (F) | LWT, deg C (F) | P.D. KPA (PSI) | L/M GPM | EWT, deg C (F) | LWT, deg C (F) | P.D. PSI (FT) KPA | HEAT TRANSFER, KW (MBH) | REMARKS |
| HX-1 | ITT HEAT TRANSFER | P-47-DW | PLATE & FRAME | DOMESTIC WATER | 103 (27) | 65 (149) | 54 (127) | 13 (1.9) | 151 (40) | 52 (125) | 60 (140) | 30 (4.3) | 86.7 (296) | (1)(2)(3) |

REMARKS:

1 HOT SIDE FLUID: GEOTHERMALLY HEATED AND TREATED WATER; COLD SIDE FLUID: FRESH WATER

2 PLATES SHALL BE 0.0197 INCH AISI 316 STAINLESS STEEL WITH DOUBLE WALL.

3 HEAT EXCHANGER SHALL BE MOUNTED ON CONCRETE HOUSEKEEPING PAD.

# EXPANSION TANK SCHEDULE

| REFERENCE | | | | | | PERFORMANCE | | | | |
|---|---|---|---|---|---|---|---|---|---|---|
| MARK | MFGR | MODEL | SERVICE | LOCATION | DETAIL REFERENCE | TYPE | TANK VOL L (GAL) | ACCEPT. FACTOR | OP. WEIGHT kG (LBS) | REMARKS |
| PET-1 | AMTROL | ST-30V | WH-1 | MECHANICAL ROOM | – | DIAPHRAGM | 53 (14.0) | 0.81 | 11.3 (23.0) | |

Username: jermey
Date: 12/01/2011 11:13am
P:\28M03\Plumbing\BLDG A\531-319_AP0.2.dwg

| REVISIONS | DATE |
|---|---|

CSHQA

C.W. MOORE PLAZA
250 S. 5TH ST. BOISE, ID 83702
(208) 343-4635 FAX (208) 343-1858
http://www.cshqa.com

STEVEN HARDY, P.E.
C.W. MOORE PLAZA
250 S. 5TH ST
BOISE, IDAHO
PHONE: 208-343-4635 FAX: 208-343-1858

THESE DRAWINGS AND SPECIFICATIONS, AS INSTRUMENTS OF SERVICE, ARE AND SHALL REMAIN THE PROPERTY OF THE ARCHITECT / ENGINEER WHETHER THE PROJECT FOR WHICH THEY ARE MADE IS EXECUTED OR NOT. THESE DRAWINGS AND SPECIFICATIONS MAY NOT BE USED BY ANY PERSON OR ENTITY ON OTHER PROJECTS, FOR ADDITIONS TO THIS PROJECT, OR COMPLETION OF THIS PROJECT WHEN PHASED WITHOUT THE WRITTEN CONSENT OF CSHQA OR ITS AFFILIATES. Copyright ©2011

STAMP

PROFESSIONAL ENGINEER REGISTERED 8702 STATE OF IDAHO STEVEN C. HARDY

CAD FILE NAME: 531-319_AP0.2.DWG

XREF FILE NAME: 531-319_xA_30X42TBLK.DWG

DRAWING TITLE: PLUMBING SCHEDULES

APPROVED: CHIEF OF FACILITY MANAGEMENT SERVICE

APPROVED: MEDICAL CENTER DIRECTOR

PROJECT TITLE: BOISE VAMC NEW EXTENDED CARE UNIT BUILDING 'A' CLC

BUILDING NUMBER: 121

CHECKED: SCH

DRAWN: RME

LOCATION: VAMC BOISE, IDAHO

DATE: 12/01/2011

PROJECT NO. 531-319

DRAWING NO. AP0.2

DWG 39 OF 58

DEPARTMENT OF VETERANS AFFAIRS

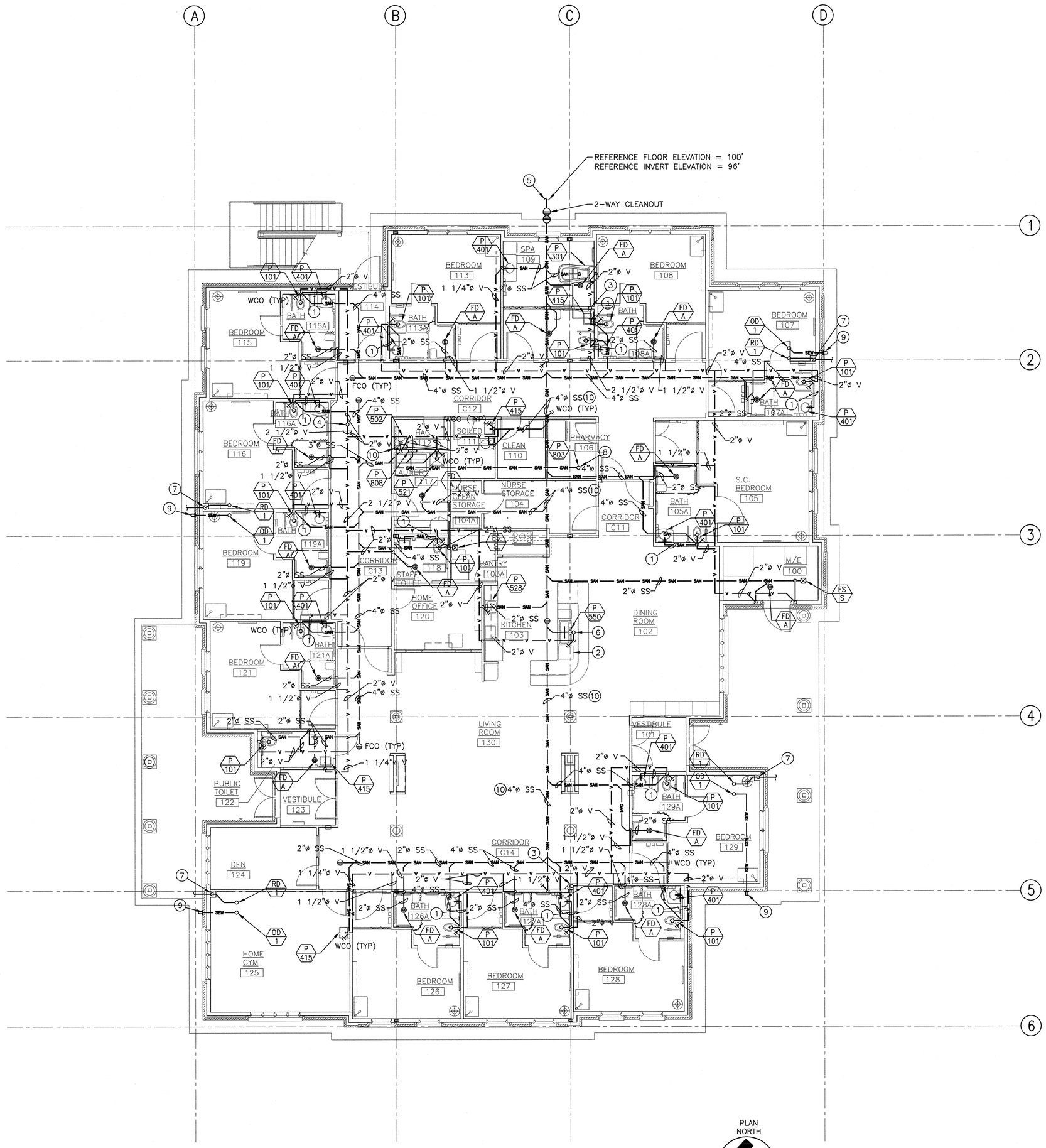


# 1 SEWER AND VENT PLAN

0' 4' 8' 12' 16' 20' 24' SCALE: 1/8 "=1'-0"

## GENERAL NOTES:

A. REFER TO THE MECHANICAL PLANS FOR EQUIPMENT AND DUCTWORK LOCATIONS BEFORE INSTALLING ANY PIPING. COORDINATE WITH THE MECHANICAL CONTRACTOR.

B. SLOPE ALL SS, VENT, CONDENSATE, RWL, AND OFL PIPING AT 21 mm PER METER (1/4" PER FOOT) UNLESS NOTED OTHERWISE.

C. PIPING PENETRATIONS THROUGH RATED ASSEMBLIES SHALL BE FIRESTOPPED IN ACCORDANCE WITH 2009 NFPA 101 SECTION 8.3.5.

D. REFER TO THE MECHANICAL PLANS FOR EQUIPMENT AND DUCTWORK LOCATIONS BEFORE INSTALLING ANY PIPING. COORDINATE WITH THE MECHANICAL CONTRACTOR.

E. CAREFULLY COORDINATE THE INSTALLATION OF WATER AND GAS PIPING LOCATED INSIDE WALLS OR ABOVE CEILINGS WITH OTHER TRADES PRIOR TO AND DURING CONSTRUCTION. COORDINATE PIPING ENTRY AND EXIT LOCATIONS WITH THE STRUCTURAL AND ARCHITECTURAL DRAWINGS PRIOR TO CONSTRUCTION.

F. ALL ITEMS THAT REQUIRE ACCESS, SUCH AS FOR OPERATING, CLEANING, SERVICING, MAINTENANCE, AND CALIBRATION, SHALL BE EASILY AND SAFELY ACCESSIBLE BY PERSONS STANDING AT FLOOR LEVEL, OR STANDING ON PERMANENT PLATFORMS, WITHOUT THE USE OF PORTABLE LADDERS. EXAMPLES OF THESE ITEMS INCLUDE, BUT ARE NOT LIMITED TO: ALL TYPES IF VALVES, FILTERS AND STRAINERS, TRANSMITTERS, CONTROL DEVICES. PRIOR TO COMMENCING INSTALLATION WORK, REFER CONFLICTS BETWEEN THIS REQUIREMENT AND CONTRACT DRAWINGS TO THE RE/COTR FOR RESOLUTION.

G. RE: AP3.0 AND AP3.1 FOR ALL PLUMBING DETAILS AND CONTROL SCHEMATICS.

H. USE THE FOLLOWING CONVERSION TABLE TO CONVERT ALL PIPE SIZES FROM ENGLISH UNITS INTO METRIC UNITS.

| ENGLISH UNITS | METRIC UNITS |
|---|---|
| 1/2 IN | 13 mm |
| 3/4 IN | 19 mm |
| 1 IN | 25 mm |
| 1-1/4 IN | 32 mm |
| 1-1/2 IN | 38 mm |
| 2 IN | 51 mm |
| 2-1/2 IN | 64 mm |
| 3 IN | 72 mm |
| 4 IN | 102 mm |

## # SHEET NOTES:

1. 38 mm (1 1/4")ø LAV DRAIN TO 51 mm (2")ø WATER CLOSET VENT.
2. EXTEND PUMPED WASTE FROM DW TO 2-COMP. SINK AS REQUIRED AND ALLOWED BY CODE.
3. 64 mm (2 1/2")ø VENT UP 76 mm (3")ø VTR ON ROOF.
4. 76 mm (3")ø VENT UP 76 mm (3")ø VTR ON ROOF.
5. 102 mm (4")ø WASTE, SEE CIVIL PLANS FOR CONTINUATION.
6. 51 mm (2")ø ISLAND VENT PER CODE.
7. 76mm (3")ø RDL DOWN IN FURRED WALL WITH 102 mm (4")ø DRAIN RUN BELOW GRADE. SEE CIVIL PLANS FOR CONTINUATION.
8. 13 mm (1/2")ø WASTE DOWN FROM P-803 ON ROOF, ROUTE TO MOP SINK AND DAYLITE WITH MIN. 25 mm (1") AIR GAP ABOVE RIM OF MOP SINK.
9. DOWNSPOUT NOZZLE: SMITH 1770-3" POLISHED BRONZE APPROVED MANUFACTURER: WADE, JOSAM AND ZURN. RE: ARCHITECTURAL PLANS.
10. COORDINATE EXACT LOCATION OF SANITARY SEWER PIPING TO AVOID CONFLICT WITH STRUCTURAL FOOTINGS. RE: AS2.0 FOR FOOTING SIZE AND LOCATIONS.

Username: jerrey
Date: 01-12-2011 11:12am
P:\20803\Plumbing\BLDG A\531-319_AP2.0.dwg

REVISIONS | DATE

CSHQA
C.W. MOORE PLAZA
250 S. 5TH ST. BOISE, ID 83702
(208) 343-4635 FAX (208) 343-1858
http://www.cshqa.com

STEVEN HARDY, P.E.
C.W. MOORE PLAZA
250 S. 5TH ST
BOISE, IDAHO
PHONE: 208-343-4635 FAX: 208-343-1858

THESE DRAWINGS AND SPECIFICATIONS, AS INSTRUMENTS OF SERVICE, ARE AND SHALL REMAIN THE PROPERTY OF THE ARCHITECT / ENGINEER WHETHER THE PROJECT FOR WHICH THEY ARE MADE IS EXECUTED OR NOT. THESE DRAWINGS AND SPECIFICATIONS SHALL NOT BE USED BY ANY PERSON OR ENTITY ON OTHER PROJECTS, FOR ADDITIONS TO THIS PROJECT, OR COMPLETION OF THIS PROJECT WHEN PHASED WITHOUT THE WRITTEN CONSENT OF CSHQA OR ITS AFFILIATES. Copyright ©2011

STAMP: PROFESSIONAL ENGINEER REGISTERED 8002 STATE OF IDAHO STEVEN C. HARDY

CAD FILE NAME: 531-319_AP2.0.DWG
XREF FILE NAME: 531-319_xA_30X42TLBK.DWG 531-319_xA_BASE1.DWG

DRAWING TITLE: SEWER AND VENT PLAN

APPROVED: CHIEF OF FACILITY MANAGEMENT SERVICE
APPROVED: MEDICAL CENTER DIRECTOR

PROJECT TITLE: BOISE VAMC NEW EXTENDED CARE UNIT BUILDING 'A' CLC

BUILDING NUMBER: 121 | CHECKED: SCH | DRAWN: RME

LOCATION: VAMC BOISE, IDAHO

DATE: 12/01/2011
PROJECT NO.: 531-319
DRAWING NO.: AP2.0
DWG 40 OF 58

DEPARTMENT OF VETERANS AFFAIRS

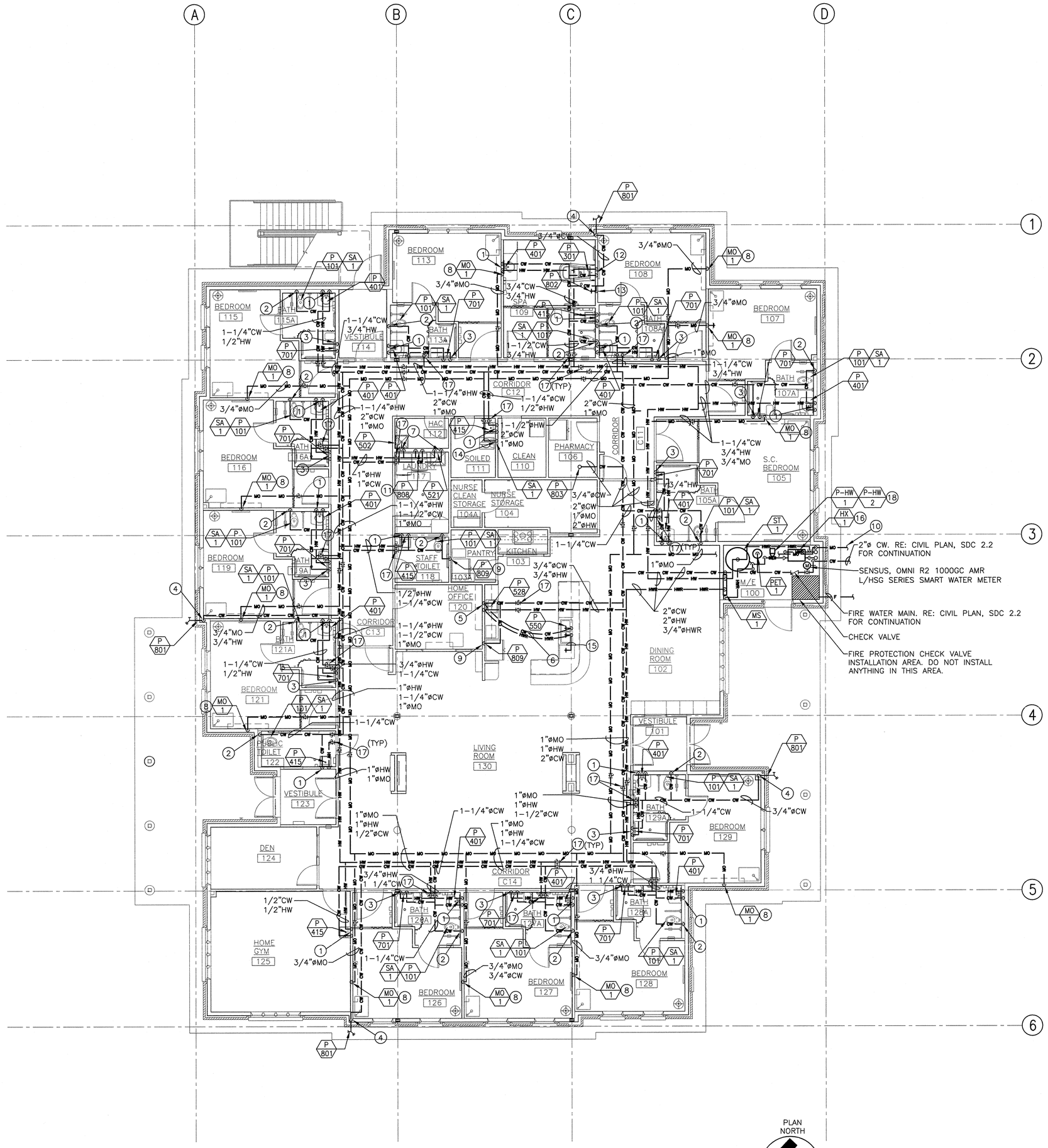


# 1 WATER AND OXYGEN PLAN

0' 4' 8' 12' 16' 20' 24' SCALE: 1/8 "=1'-0"

## GENERAL NOTES:

A. REFER TO THE MECHANICAL PLANS FOR EQUIPMENT AND DUCTWORK LOCATIONS BEFORE INSTALLING ANY PIPING. COORDINATE WITH THE MECHANICAL CONTRACTOR.

B. SLOPE ALL SS, VENT, CONDENSATE, RWL, AND OFL PIPING AT 21 mm PER METER (1/4" PER FOOT) UNLESS NOTED OTHERWISE.

C. PIPING PENETRATIONS THROUGH RATED ASSEMBLIES SHALL BE FIRESTOPPED IN ACCORDANCE WITH 2009 NFPA 101 SECTION 8.3.5.

D. REFER TO THE MECHANICAL PLANS FOR EQUIPMENT AND DUCTWORK LOCATIONS BEFORE INSTALLING ANY PIPING. COORDINATE WITH THE MECHANICAL CONTRACTOR.

E. CAREFULLY COORDINATE THE INSTALLATION OF WATER AND GAS PIPING LOCATED INSIDE WALLS OR ABOVE CEILINGS WITH OTHER TRADES PRIOR TO AND DURING CONSTRUCTION. COORDINATE PIPING ENTRY AND EXIT LOCATIONS WITH THE STRUCTURAL AND ARCHITECTURAL DRAWINGS PRIOR TO CONSTRUCTION.

F. ALL ITEMS THAT REQUIRE ACCESS, SUCH AS FOR OPERATING, CLEANING, SERVICING, MAINTENANCE, AND CALIBRATION, SHALL BE EASILY AND SAFELY ACCESSIBLE BY PERSONS STANDING AT FLOOR LEVEL, OR STANDING ON PERMANENT PLATFORMS, WITHOUT THE USE OF PORTABLE LADDERS. EXAMPLES OF THESE ITEMS INCLUDE, BUT ARE NOT LIMITED TO: ALL TYPES IF VALVES, FILTERS AND STRAINERS, TRANSMITTERS, CONTROL DEVICES. PRIOR TO COMMENCING INSTALLATION WORK, REFER CONFLICTS BETWEEN THIS REQUIREMENT AND CONTRACT DRAWINGS TO THE RE/COTR FOR RESOLUTION.

G. RE: AP3.0 AND AP3.1 FOR ALL PLUMBING DETAILS AND CONTROL SCHEMATICS.

H. USE THE FOLLOWING CONVERSION TABLE TO CONVERT ALL PIPE SIZES FROM ENGLISH UNITS INTO METRIC UNITS.

| ENGLISH UNITS | METRIC UNITS |
|---|---|
| 1/2 IN | 13 mm |
| 3/4 IN | 19 mm |
| 1 IN | 25 mm |
| 1-1/4 IN | 32 mm |
| 1-1/2 IN | 38 mm |
| 2 IN | 51 mm |
| 2-1/2 IN | 64 mm |
| 3 IN | 72 mm |
| 4 IN | 102 mm |

## # SHEET NOTES:

1. 13 mm (1/2")ø HW AND CW DOWN, CONNECT TO LAVATORY AS REQUIRED.
2. 32 mm (1 1/4") ø DOWN, CONNECT TO WC AS REQUIRED.
3. 13 mm (1/2")ø HW AND CW DOWN, CONNECT TO SHOWER ASSEMBLY AS REQUIRED.
4. 19 mm (3/4")ø CW DOWN ON WARM SIDE OF INSULATION TO HOSE BIBB AT 457 mm (18") A.F.F.
5. 19 mm (3/4")ø HW AND CW DOWN TO KITCHEN SINK, CONNECT AS REQUIRED.
6. 13 mm (1/2")ø HW AND CW RUN UNDER SLAB, INSTALL FREE OF JOINTS BELOW FLOOR AND ENCASED IN IMCOLOCK 1" POLYOLEFIN INSULATION. INSULATION SHALL EXTEND 2" ABOVE FINISHED SLAB AND SEALED TIGHT.
7. 13 mm (1/2")ø HW AND CW DOWN TO SINK AND CONNECT AS REQUIRED.
8. 13 mm (1/2")ø DOWN TO MEDICAL QUICK CONNECT, CHEMETRON SERIES 500, SEE SPECIFICATIONS.
9. 13 mm (1/2")ø CW DOWN TO WALL BOX AT 914 mm (36") A.F.F.
10. 25 mm (1")ø OXYGEN SERVICE. SEE CIVIL PLANS FOR CONTINUATION. MEDICAL OXYGEN SHALL BE DELIVERED TO THIS POINT AT 55 PSI. FURNISH AND INSTALL OXYGEN ZONE VALVE BOX IN M/E 100 ON MAIN OXYGEN LINE PRIOR TO ANY BRANCH.
11. 19 mm (3/4")ø HW AND CW DOWN TO WASHER BOX AT 1067 mm (42") A.F.F. CONNECT TO WASHER BOX AS REQUIRED.
12. 19 mm (3/4")ø HW AND CW DOWN TO OWNER FURNISHED TUB AND CONNECT AS REQUIRED.
13. 19 mm (3/4")ø CW DOWN TO HOSE BIBB AT 610 mm (24") A.F.F.
14. 32 mm (1 1/4") ø CW DOWN, CONNECT TO OWNER FURNISHED VERNACARE AS REQUIRED.
15. 13 mm (1/2")ø HW TO UNDER COUNTER DW, ROUGH-IN AND CONNECT AS REQUIRED.
16. RE: AP3.1 FOR HX-1 SCHEMATIC.
17. LOCATE ISOLATION VALVES TO ALLOW ACCESS THROUGH ACCESS PANEL. COORDINATE EXACT LOCATION OF ACCESS PANEL WITH GENERAL CONTRACTOR AND ARCHITECTURAL PLANS.
18. P-HW-1 AND P-HW-2 SHALL BE STACKED.

Username: jermey
Date: 01, 12, 2011 11:17am
P:\Jobs\531\Plumbing\BLDG A\531-319_AP2.1.dwg

| REVISIONS | DATE |
|---|---|
| | |

CSHQA

C.W. MOORE PLAZA
250 S. 5TH ST. BOISE, ID 83702
(208) 343-4635 FAX (208) 343-1858
http://www.cshqa.com

STEVEN HARDY, P.E.
C.W. MOORE PLAZA
250 S. 5TH ST
BOISE, IDAHO
PHONE: 208-343-4635 FAX: 208-343-1858

THESE DRAWINGS AND SPECIFICATIONS, AS INSTRUMENTS OF SERVICE, ARE AND SHALL REMAIN THE PROPERTY OF THE ARCHITECT / ENGINEER WHETHER THE PROJECT FOR WHICH THEY ARE MADE IS EXECUTED OR NOT. THESE DRAWINGS AND SPECIFICATIONS SHALL NOT BE USED BY ANY PERSON OR ENTITY ON OTHER PROJECTS, FOR ADDITIONS TO THIS PROJECT, OR COMPLETION OF THIS PROJECT WHEN PHASED WITHOUT THE WRITTEN CONSENT OF CSHQA OR ITS AFFILIATES. Copyright ©2011

STAMP

PROFESSIONAL ENGINEER REGISTERED 8702 STATE OF IDAHO STEVEN C. HARDY

CAD FILE NAME: 531-319_AP2.1.DWG

XREF FILE NAME: 531-319_xA_30X42TBLK.DWG 531-319_xA_BASE1.DWG

DRAWING TITLE: WATER AND OXYGEN PLAN

APPROVED: CHIEF OF FACILITY MANAGEMENT SERVICE

APPROVED: MEDICAL CENTER DIRECTOR

PROJECT TITLE: BOISE VAMC NEW EXTENDED CARE UNIT BUILDING 'A' CLC

| BUILDING NUMBER | CHECKED | DRAWN |
|---|---|---|
| 121 | SCH | RME |

LOCATION: VAMC BOISE, IDAHO

DATE: 12/01/2011

PROJECT NO. 531-319

DRAWING NO. AP2.1

DWG 41 OF 58

DEPARTMENT OF VETERANS AFFAIRS

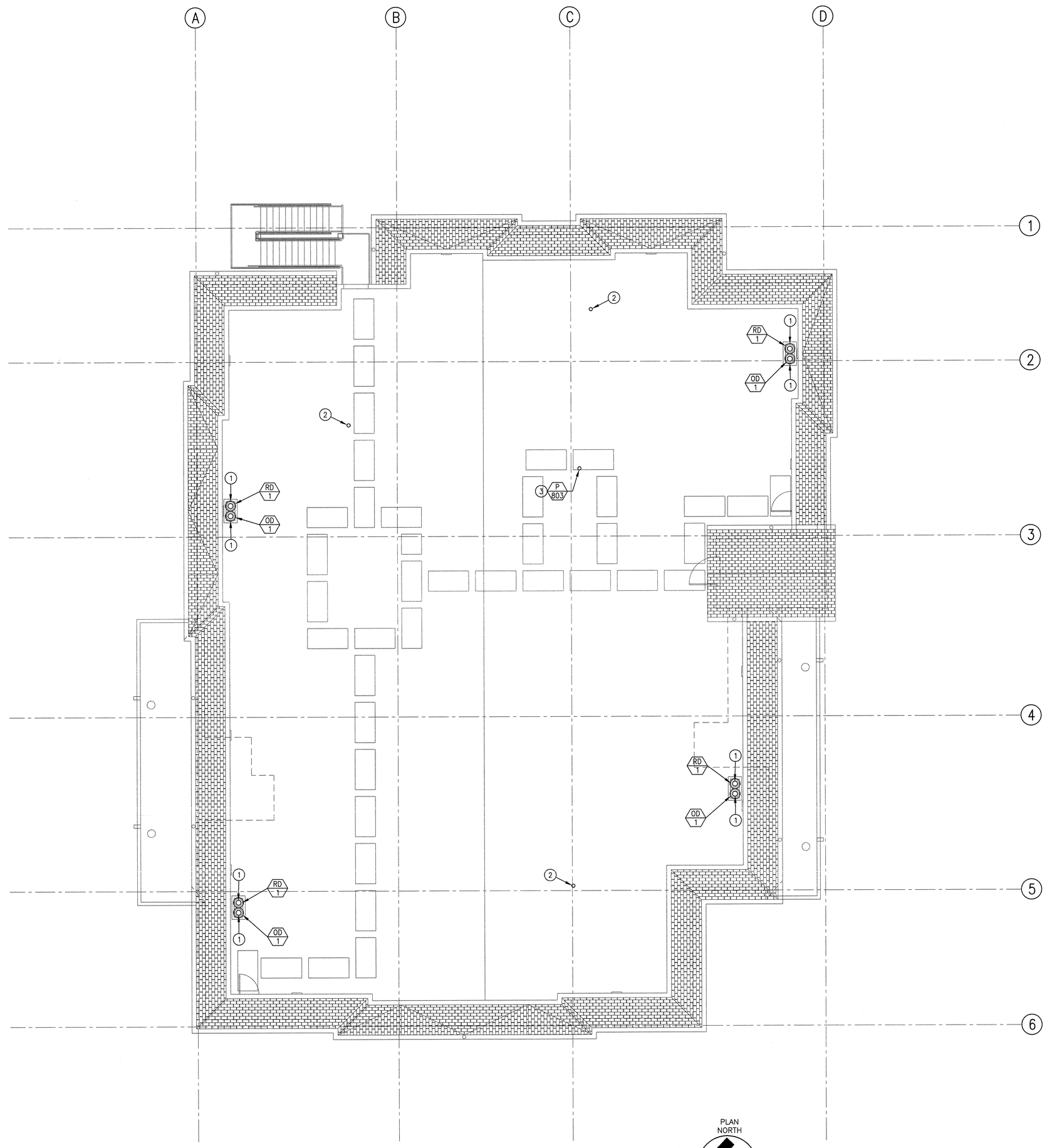


# 1 ROOF PLUMBING PLAN

0' 4' 8' 12' 16' 20' 24' SCALE: 1/8 "=1'-0"

## GENERAL NOTES:

A. REFER TO THE MECHANICAL PLANS FOR EQUIPMENT AND DUCTWORK LOCATIONS BEFORE INSTALLING ANY PIPING. COORDINATE WITH THE MECHANICAL CONTRACTOR.

B. SLOPE ALL SS, VENT, CONDENSATE, RWL, AND OFL PIPING AT 21 mm PER METER (1/4" PER FOOT) UNLESS NOTED OTHERWISE.

C. PIPING PENETRATIONS THROUGH RATED ASSEMBLIES SHALL BE FIRESTOPPED IN ACCORDANCE WITH 2009 NFPA 101 SECTION 8.3.5.

D. REFER TO THE MECHANICAL PLANS FOR EQUIPMENT AND DUCTWORK LOCATIONS BEFORE INSTALLING ANY PIPING. COORDINATE WITH THE MECHANICAL CONTRACTOR.

E. CAREFULLY COORDINATE THE INSTALLATION OF WATER AND GAS PIPING LOCATED INSIDE WALLS OR ABOVE CEILINGS WITH OTHER TRADES PRIOR TO AND DURING CONSTRUCTION. COORDINATE PIPING ENTRY AND EXIT LOCATIONS WITH THE STRUCTURAL AND ARCHITECTURAL DRAWINGS PRIOR TO CONSTRUCTION.

F. ALL ITEMS THAT REQUIRE ACCESS, SUCH AS FOR OPERATING, CLEANING, SERVICING, MAINTENANCE, AND CALIBRATION, SHALL BE EASILY AND SAFELY ACCESSIBLE BY PERSONS STANDING AT FLOOR LEVEL, OR STANDING ON PERMANENT PLATFORMS, WITHOUT THE USE OF PORTABLE LADDERS. EXAMPLES OF THESE ITEMS INCLUDE, BUT ARE NOT LIMITED TO: ALL TYPES IF VALVES, FILTERS AND STRAINERS, TRANSMITTERS, CONTROL DEVICES. PRIOR TO COMMENCING INSTALLATION WORK, REFER CONFLICTS BETWEEN THIS REQUIREMENT AND CONTRACT DRAWINGS TO THE RE/COTR FOR RESOLUTION.

G. RE: AP3.0 AND AP3.1 FOR ALL PLUMBING DETAILS AND CONTROL SCHEMATICS.

H. USE THE FOLLOWING CONVERSION TABLE TO CONVERT ALL PIPE SIZES FROM ENGLISH UNITS INTO METRIC UNITS.

| ENGLISH UNITS | METRIC UNITS |
|---|---|
| 1/2 IN | 13 mm |
| 3/4 IN | 19 mm |
| I IN | 25 mm |
| 1-1/4 IN | 32 mm |
| 1-1/2 IN | 38 mm |
| 2 IN | 51 mm |
| 2-1/2 IN | 64 mm |
| 3 IN | 72 mm |
| 4 IN | 102 mm |

## # SHEET NOTES:

1. 76.2 mm (3")ø RDL OR 76.2 mm (3")ø ODL DOWN TO FIRST FLOOR. RE: AP2.0 FOR CONTINUATION.
2. 76.2 mm (3")ø VTR UP FROM FLOOR BELOW. RE: AP2.0 FOR CONTINUATION.
3. 19 mm (3/4")ø COLD WATER UP FROM BELOW. RE: AP2.1 FOR CONTINUATION.

REVISIONS | DATE

CSHQA

C.W. MOORE PLAZA
250 S. 5TH ST. BOISE, ID 83702
(208) 343-4635 FAX (208) 343-1858
http://www.cshqa.com


STEVEN HARDY, P.E.
C.W. MOORE PLAZA
250 S. 5TH ST
BOISE, IDAHO
PHONE: 208-343-4635 FAX: 208-343-1858



THESE DRAWINGS AND SPECIFICATIONS, AS INSTRUMENTS OF SERVICE, ARE AND SHALL REMAIN THE PROPERTY OF THE ARCHITECT / ENGINEER WHETHER THE PROJECT FOR WHICH THEY ARE MADE IS EXECUTED OR NOT. THESE DRAWINGS AND SPECIFICATIONS SHALL NOT BE USED BY ANY PERSON OR ENTITY ON OTHER PROJECTS, FOR ADDITIONS TO THIS PROJECT, OR COMPLETION OF THIS PROJECT-WHEN PHASED-WITHOUT THE WRITTEN CONSENT OF CSHQA OR ITS AFFILIATES. Copyright ©2011


STAMP

PROFESSIONAL ENGINEER REGISTERED 8802 STATE OF IDAHO STEVEN C. HARDY

CAD FILE NAME: 531-319_AP2.2.DWG

XREF FILE NAME: 531-319_xA_30X42TLBK.DWG 531-319_xA_ROOF PLAN.DWG

DRAWING TITLE: ROOF PLUMBING PLAN

APPROVED: CHIEF OF FACILITY MANAGEMENT SERVICE

APPROVED: MEDICAL CENTER DIRECTOR

PROJECT TITLE: BOISE VAMC NEW EXTENDED CARE UNIT BUILDING 'A' CLC

BUILDING NUMBER: 121 | CHECKED: SCH | DRAWN: RME

LOCATION: VAMC BOISE, IDAHO

DATE: 12/01/2011

PROJECT NO.: 531-319

DRAWING NO.: AP2.2

DWG 42 OF 58

DEPARTMENT OF VETERANS AFFAIRS

Username: jermey
Dec 01, 2011 - 11:12am
P:\28M03\Plumbing\BLDG A\531-319_AP2.2.dwg

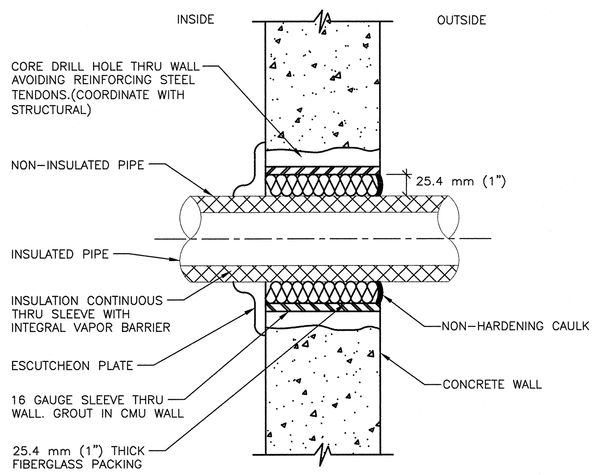


1 PIPE PENETRATION THRU CONCRETE WALL DETAIL
SCALE NTS

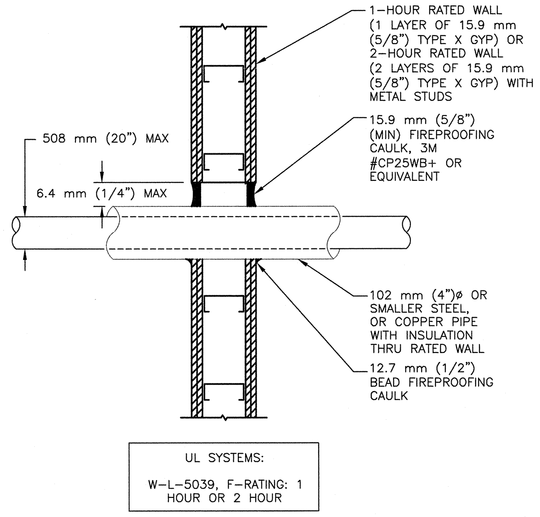


2 INSULATED PIPE FIRESTOPPING THRU WALL DETAIL
SCALE NTS

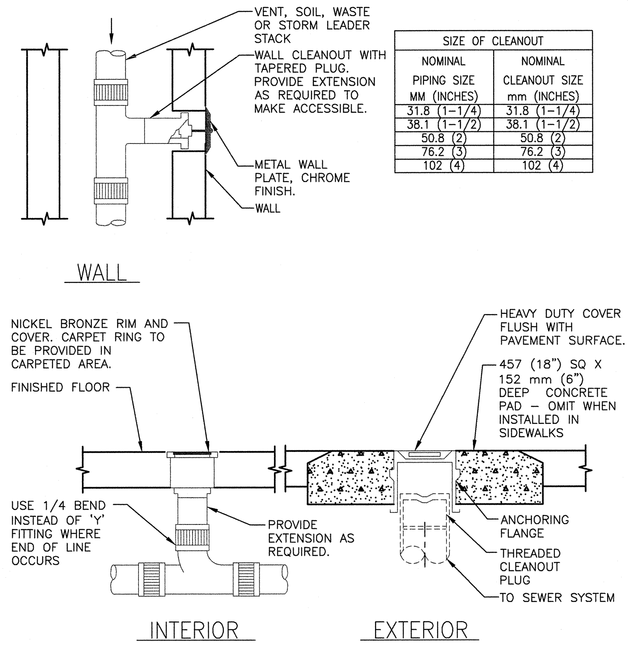


| SIZE OF CLEANOUT | |
|---|---|
| NOMINAL PIPING SIZE MM (INCHES) | NOMINAL CLEANOUT SIZE mm (INCHES) |
| 31.8 (1-1/4) | 31.8 (1-1/4) |
| 38.1 (1-1/2) | 38.1 (1-1/2) |
| 50.8 (2) | 50.8 (2) |
| 76.2 (3) | 76.2 (3) |
| 102 (4) | 102 (4) |

3 FLOOR AND WALL CLEANOUT DETAIL
SCALE NTS

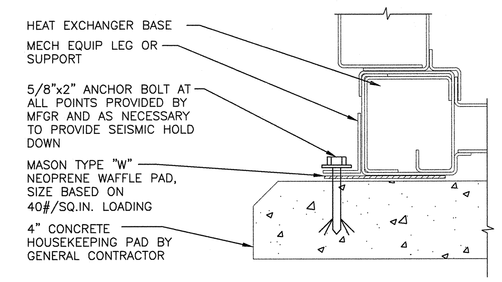


4 HEAT EXCHANGER - MOUNTING DETAIL
SCALE NTS

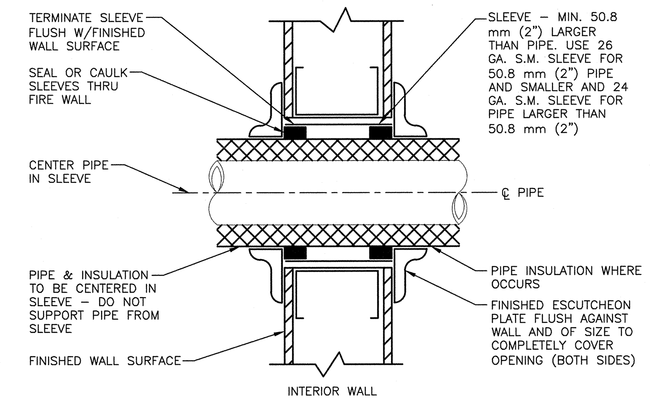


5 PIPE THRU FRAMED WALL DETAIL
SCALE NTS

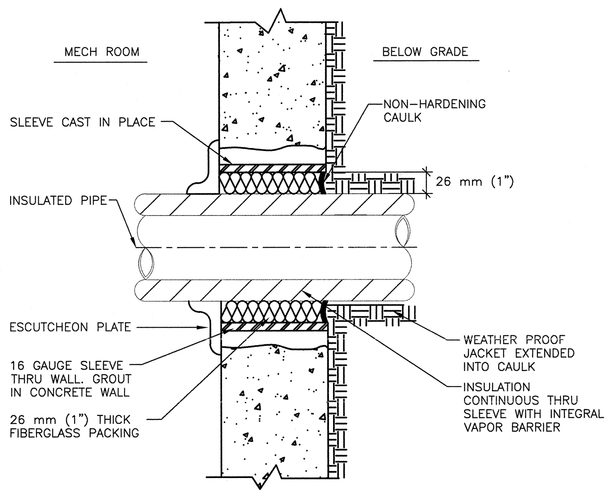


6 PENETRATION THRU BELOW GRADE WALL DETAIL
SCALE NTS

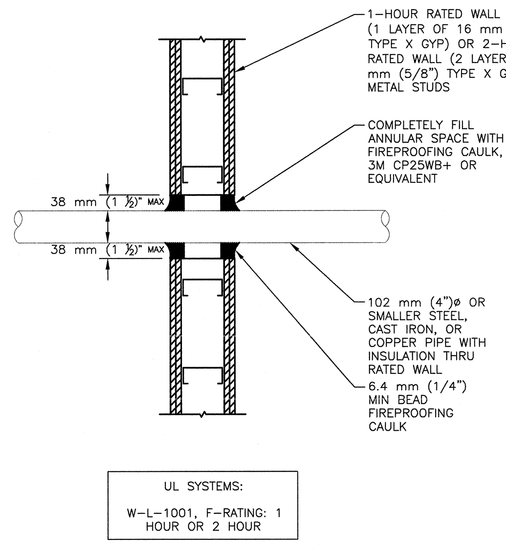


7 PIPE FIRESTOPPING THRU WALL DETAIL
SCALE NTS

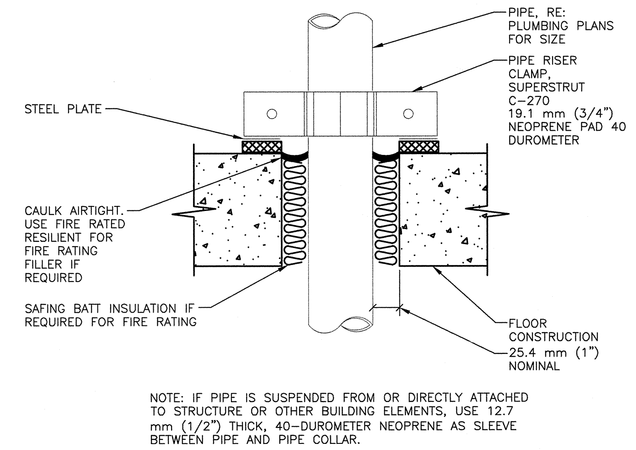


NOTE: IF PIPE IS SUSPENDED FROM OR DIRECTLY ATTACHED TO STRUCTURE OR OTHER BUILDING ELEMENTS, USE 12.7 mm (1/2") THICK, 40-DUROMETER NEOPRENE AS SLEEVE BETWEEN PIPE AND PIPE COLLAR.

8 PIPE ISOLATION AT FLOOR PENETRATION DETAIL
SCALE NTS

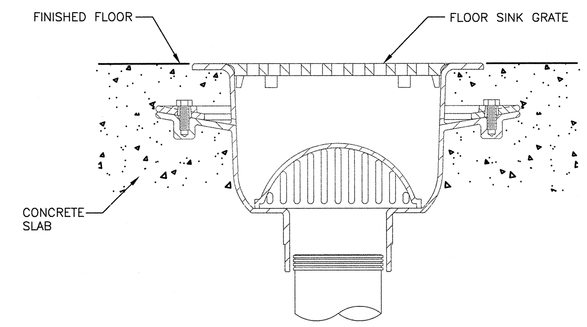


9 FLOOR SINK DETAIL
SCALE NTS

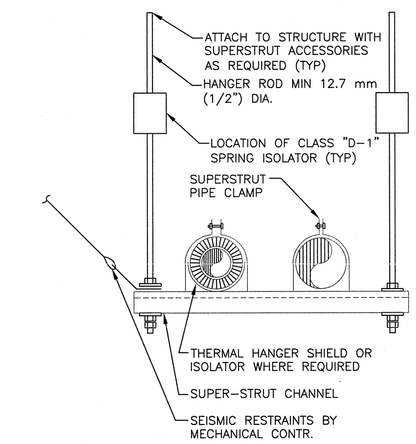


10 TRAPEZE SPRING HANGER DETAIL
SCALE NTS

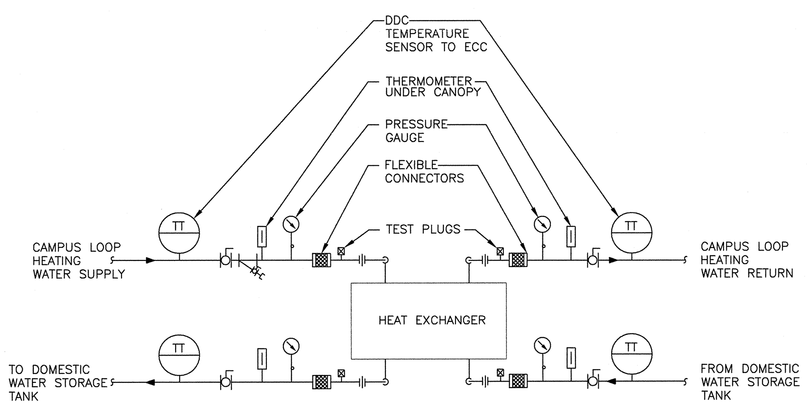


11 HEAT EXCHANGER - PIPING CONNECTIONS
SCALE NTS

| REVISIONS | DATE |
|---|---|

CSHQA

C.W. MOORE PLAZA
250 S. 5TH ST. BOISE, ID 83702
(208) 343-4635 FAX (208) 343-1858
http://www.cshqa.com

STEVEN HARDY, P.E.
C.W. MOORE PLAZA
250 S. 5TH ST
BOISE, IDAHO
PHONE: 208-343-4635 FAX: 208-343-1858

THESE DRAWINGS AND SPECIFICATIONS, AS INSTRUMENTS OF SERVICE, ARE AND SHALL REMAIN THE PROPERTY OF THE ARCHITECT / ENGINEER WHETHER THE PROJECT FOR WHICH THEY ARE MADE IS EXECUTED OR NOT. THESE DRAWINGS AND SPECIFICATIONS SHALL NOT BE USED BY ANY PERSON OR ENTITY ON OTHER PROJECTS, FOR ADDITIONS TO THIS PROJECT, OR COMPLETION OF THIS PROJECT WHEN PHASED WITHOUT THE WRITTEN CONSENT OF CSHQA OR ITS AFFILIATES. Copyright ©2011

STAMP
PROFESSIONAL ENGINEER REGISTERED 6802 STATE OF IDAHO STEVEN C. HARDY

CAD FILE NAME: 531-319_AP3.0.DWG
XREF FILE NAME: 531-319_xA_30X42TBLK.DWG

DRAWING TITLE: PLUMBING DETAILS

PROJECT TITLE: BOISE VAMC NEW EXTENDED CARE UNIT BUILDING 'A' CLC

DATE: 12/01/2011
PROJECT NO. 531-319

APPROVED: CHIEF OF FACILITY MANAGEMENT SERVICE
APPROVED: MEDICAL CENTER DIRECTOR

BUILDING NUMBER: 121
CHECKED: SCH
DRAWN: RME
LOCATION: VAMC BOISE, IDAHO

DRAWING NO. AP3.0
DWG 43 OF 58

DEPARTMENT OF VETERANS AFFAIRS

Username: jermey
Date: 2011-11-11 11:11am
P:\28M03\Plumbing\BLDG A\531-319_AP3.0.dwg

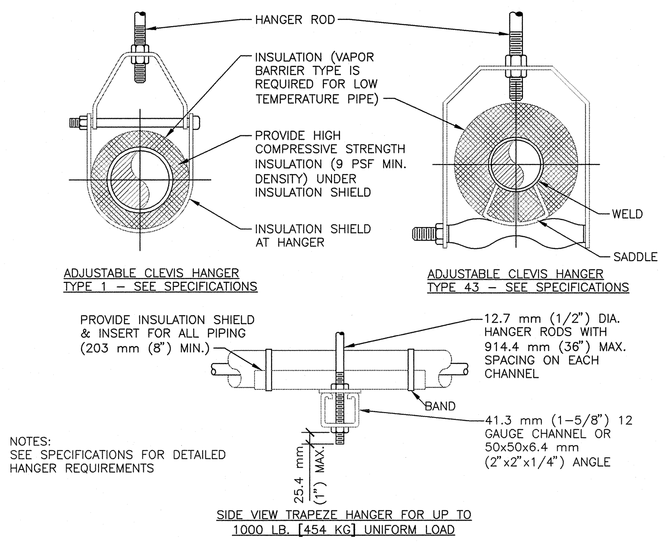


| MAXIMUM PIPE/TUBING SUPPORT SPACING | | | | | | | | | |
|---|---|---|---|---|---|---|---|---|---|
| NOM. SIZE | IN. [mm] | THRU 3/4 THRU [19.1] | 1 [25.4] | 1 1/4 [31.8] | 1 1/2 [38.1] | 2 [50.8] | 2 1/2 [63.5] | 3 [76.2] | 4 [102] |
| PIPE | FT. [mm] | 7 [2134] | 7 [2134] | 7 [2134] | 9 [2700] | 10 [3048] | 11 [3353] | 12 [3658] | 14 [4267] |
| TUBING | FT. [mm] | 5 FT [1524] | 6 [1829] | 7 [2134] | 8 [2438] | 8 [2438] | 9 [2743] | 10 [3048] | 12 [3658] |
| NOTE: FOR TRAPEZE HANGER TAKE SPACING OF SMALLEST SIZE ON TRAPEZE. | | | | | | | | | |

**1** PIPE HANGERS
SCALE NTS

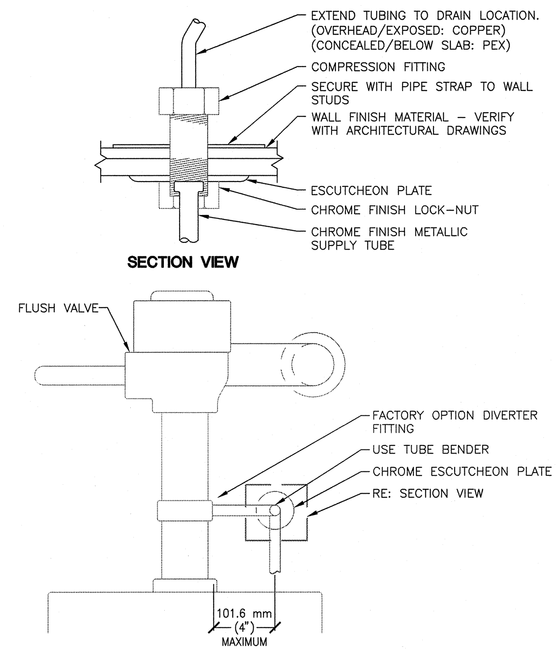


**2** TRAP PRIMER AT FLUSH VALVE DETAIL
SCALE NTS

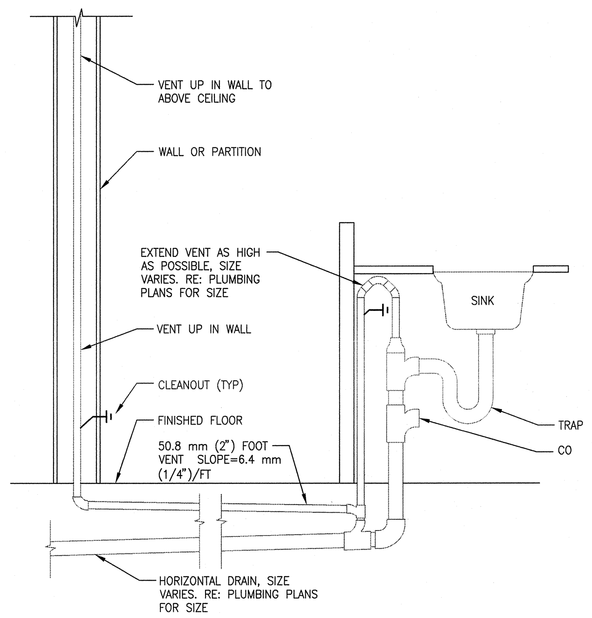


**3** ISLAND VENT DETAIL
SCALE NTS

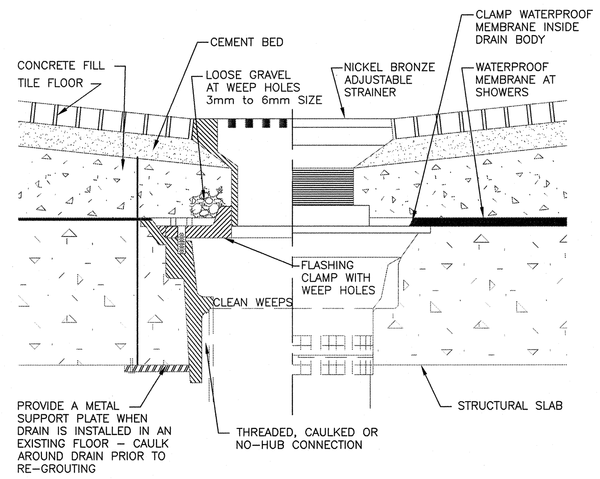


**4** TYPE "C" FLOOR DRAIN DETAIL
SCALE NTS

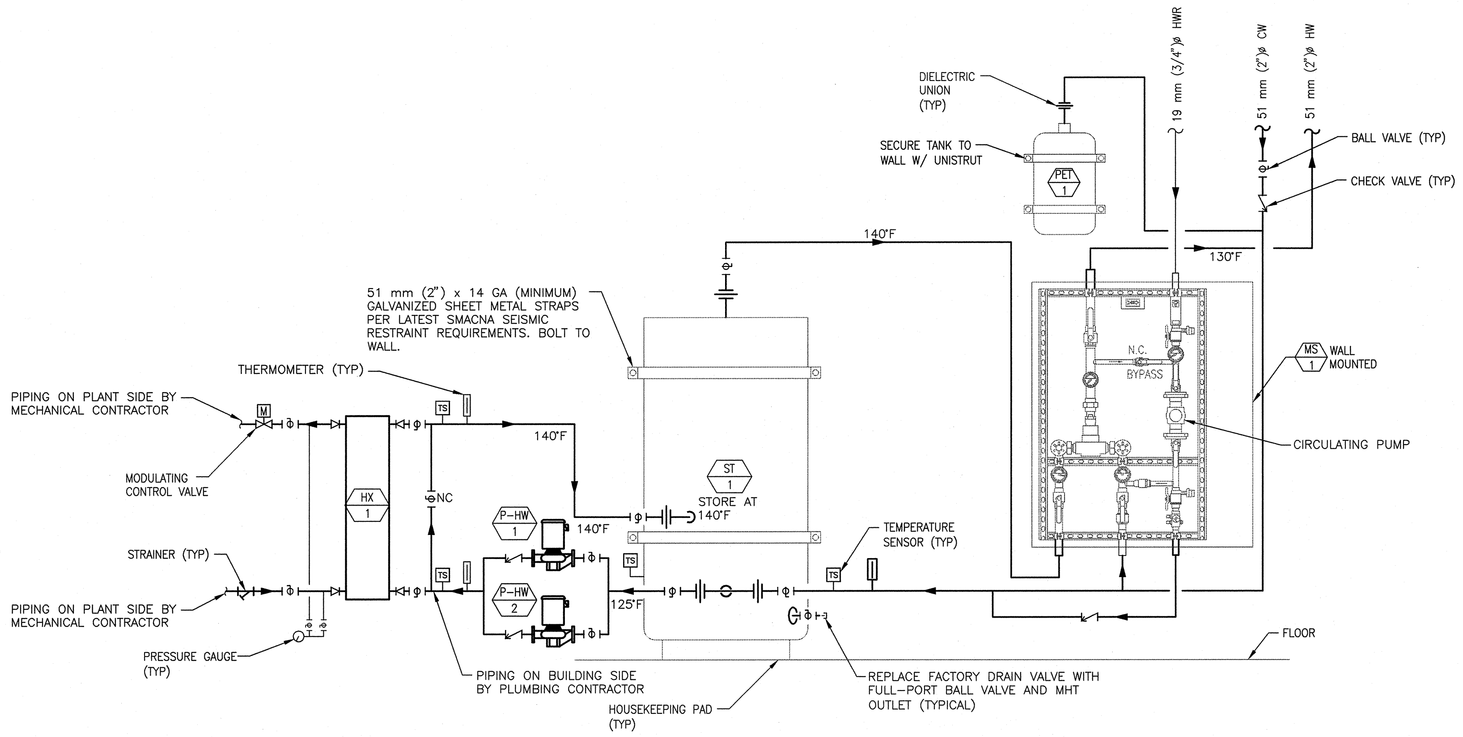


**5** HEAT EXCHANGER STORAGE TANK PIPING DETAIL
SCALE NTS

NOTE:
RE: AM3.6 HEATING WATER LOOP SYSTEM CONTROL SCHEMATIC & POINTS LIST FOR CONTROL POINTS FOR HEAT EXCHANGER STORAGE TANK SYSTEM AND CONNECTION TO DDC SYSTEM

Username: jjel
May 22, 2012 – 2:16pm
C:\Users\jjel\Desktop\531–319_AP3.1.dwg

| REVISIONS | DATE |
|---|---|
| | |

CSHQA
C.W. MOORE PLAZA
250 S. 5TH ST. BOISE, ID 83702
(208) 343-4635 FAX (208) 343-1858
http://www.cshqa.com


STEVEN HARDY, P.E.
C.W. MOORE PLAZA
250 S. 5TH ST
BOISE, IDAHO
PHONE: 208-343-4635 FAX: 208-343-1858



THESE DRAWINGS AND SPECIFICATIONS, AS INSTRUMENTS OF SERVICE, ARE AND SHALL REMAIN THE PROPERTY OF THE ARCHITECT / ENGINEER WHETHER THE PROJECT FOR WHICH THEY ARE MADE IS EXECUTED OR NOT. THESE DRAWINGS AND SPECIFICATIONS SHALL NOT BE USED BY ANY PERSON OR ENTITY ON OTHER PROJECTS, FOR ADDITIONS TO THIS PROJECT, OR COMPLETION OF THIS PROJECT WHEN PHASED WITHOUT THE WRITTEN CONSENT OF CSHQA OR ITS AFFILIATES. Copyright©2011


STAMP
PROFESSIONAL ENGINEER REGISTERED 9702 STATE OF IDAHO STEVEN C. HARDY 5/24/12

CAD FILE NAME: 531–319_AP3.1.DWG
XREF FILE NAME: 531–319_xA_30X42TLBK.DWG

DRAWING TITLE: PLUMBING DETAILS

PROJECT TITLE: BOISE VAMC NEW EXTENDED CARE UNIT BUILDING 'A' CLC

DATE: 12/01/2011
PROJECT NO.: 531–319

APPROVED: CHIEF OF FACILITY MANAGEMENT SERVICE
APPROVED: MEDICAL CENTER DIRECTOR

BUILDING NUMBER: 121
CHECKED: SCH
DRAWN: RME
LOCATION: VAMC BOISE, IDAHO
DRAWING NO.: AP3.1
DWG 44 OF 58

DEPARTMENT OF VETERANS AFFAIRS