STRUCTURAL ABBREVIATIONS

#	POUNDS OR NUMBER
@	AT
A.B.	ANCHOR BOLTS
A.F.F.	ABOVE FINISH FLOOR
ADD'L.	ADDITIONAL
APPLIC.	APPLICABLE
ARCH'L.	ARCHITECTURAL
B.N.	BOUNDARY NAILING
B.O.D.	BOTTOM OF DECK
BLKG.	BLOCKING
B.M.	BEAM
BOT.	BOTTOM
BRNG.	BEARING
BTWN.	BETWEEN
C	CAMBER
C.F.S.	COLD FORMED STEEL
C.J.P.	COMPLETE JOINT PENETRATION
CL.	CENTERLINE
CLR.	CLEAR
CMU	CONCRETE MASONRY UNIT
COL.	COLUMN
CONC.	CONCRETE
CONN.	CONNECTION
CONT.	CONTINUOUS
COORD.	COORDINATE
D.B.A.	DEFORMED BAR ANCHOR
DBL.	DOUBLE
DET.	DETAIL
DL	DEAD LOAD
D.P.	DEEP
DWLS.	DOWELS
E.A.	EPOXY ANCHOR
E.B.	EXPANSION BOLT
E.N.	EDGE NAILING
EA.	EACH
ELEV.	ELEVATION
E.S.	EDGE SCREWING
EMBED.	EMBEDMENT
EXIST.	EXISTING
EXT.	EXTERIOR
F.N.	FIELD NAILING
FDN.	FOUNDATION
FIN.	FINISH
FLR.	FLOOR
FRMG.	FRAMING
FTG.	FOOTING
G.S.N.	GENERAL STRUCTURAL NOTES
GA.	GAUGE
GLB	GLU-LAM BEAM
H.A.S.	HEADED ANCHOR STUD
H.S.B.	HIGH STRENGTH BOLT
HORIZ.	HORIZONTAL
INFO.	INFORMATION
INT.	INTERIOR
J.A.	JOIST BEARING
JST.	JOIST
K	KIPS (1000 POUNDS)
LL	LIVE LOAD
LLH	LONG LEG HORIZONTAL
LLV	LONG LEG VERTICAL
LSL	LAMINATED STRAND LUMBER
LVL	LAMINATED VENEER LUMBER
M.A.	MACHINE BOLT
MAS.	MASONRY
MAX.	MAXIMUM
MECH'L.	MECHANICAL
MFR.	MANUFACTURER
MIN.	MINIMUM
MISC.	MISCELLANEOUS
N.T.S.	NOT TO SCALE
NO.	NUMBER
O.C.	ON CENTER
O.H.	OPPOSITE HAND
O.W.J.	OPEN WEB STEEL JOIST
OPNG.	OPENING
P.D.F	POWDER DRIVEN FASTENER
P.T.	PRESSURE TREATED
PERP.	PERPENDICULAR
PL.	PLATE
PLF	POUNDS PER LINEAR FOOT
PSF	POUNDS PER SQUARE FOOT
PSI	POUNDS PER SQUARE INCH
PSL	PARALLAM
PT.	POINT
REINF.	REINFORCING
REQ'D.	REQUIRED
SCHED.	SCHEDULE
SHT.	SHEET
SHTG.	SHEATHING
SIM.	SIMILAR
SJ.	SLAB JOINT
SPECS.	SPECIFICATIONS
SQ.	SQUARE
STAGG.	STAGGERED
STD.	STANDARD
STIFF.	STIFFENER
STL.	STEEL
T.A.S.	THREADED ANCHOR STUD
T.N.	TOE NAIL
T.O.F.	TOP OF FOOTING
T.O.M.	TOP OF MASONRY
T.O.S.	TOP OF STEEL
TYP.	TYPICAL
U.O.	UNLESS NOTED OTHERWISE
VERT.	VERTICAL
V.I.F.	VERIFY IN FIELD
W.F.	WIDE FLANGE (BEAM)
W.P.	WORK POINT
W/	WITH
W/O	WITHOUT
WD.	WOOD
W.W.R.	WELDED WIRE REINF.

GENERAL STRUCTURAL NOTES

1. DESIGN INFORMATION AND LOADS USED: 2009 INTERNATIONAL BUILDING CODE
   - A. ROOF DEAD LOAD ..... 20 PSF
   - C. OCCUPANCY CATEGORY..... II
   - D. SNOW LOAD:
     - GROUND SNOW LOAD, Pg ..... 20 PSF
     - SNOW EXPOSURE FACTOR, Ce 1.0
     - SNOW IMPORTANCE FACTOR, I 1.0
     - THERMAL FACTOR, Ct 1.0
     - FLAT ROOF SNOW LOAD ..... 25 PSF
   - E. FLOOR LIVE LOAD ..... 100 PSF
   - F. WIND LOAD:
     - BASIC WIND SPEED ..... 90 MPH
     - WIND IMPORTANCE FACTOR 1.0
     - WIND EXPOSURE ..... B
     - INTERNAL PRESSURE COEF. GCpi ..... +/- 0.18
   - G. SEISMIC IMPORTANCE FACTOR, Ie 1.0
     - MAPPED SPECTRAL RESPONSE ACCEL., Ss 0.310g
     - MAPPED SPECTRAL RESPONSE ACCEL., S1 ..... 0.105g
     - SITE CLASS ..... D
     - Fa 1.55
     - Fv 2.38
     - SPECTRAL RESPONSE COEFFICIENT, Sms 0.321
     - SPECTRAL RESPONSE COEFFICIENT, Sms 0.167
     - SEISMIC DESIGN CATEGORY ..... D
     - BASIC SEISMIC FORCE RESISTING SYSTEM ..... LIGHT FRAMED WALLS W/ STL. SHEETS (BEARING WALL SYSTEM)
     - ANALYSIS PROCEDURE ..... EQUIVALENT LATERAL FORCE
     - RESPONSE MODIFICATION FACTOR, R ..... 6½"
     - SEISMIC RESPONSE COEFFICIENT USED FOR DESIGN Cs 0.07
     - FOR DESIGN
     - DESIGN BASE SHEAR V =..... 0.07W
   - H. GEOTECHNICAL REPORT:
     - PREPARED BY MATERIALS TESTING & INSPECTION, DATED 05 MAY 2011
     - MTI FILE NUMBER B110389g.

2. SPECIAL INSPECTION:
   - A. A SPECIAL INSPECTOR SHALL BE EMPLOYED. THE SPECIAL INSPECTOR SHALL BE A QUALIFIED PERSON WHO SHALL DEMONSTRATE COMPETENCE, TO THE SATISFACTION OF THE BUILDING OFFICIAL, FOR INSPECTION OF THE PARTICULAR TYPE OF CONSTRUCTION OR OPERATION REQUIRING SPECIAL INSPECTION.
   - B. ALL SPECIAL INSPECTION SHALL BE IN ACCORDANCE WITH THE 2009 INTERNATIONAL BUILDING CODE.
   - C. INSPECTION OF TWENTY PERCENT OF AN OPERATION OR PROCEDURE SHALL BE CONSIDERED ADEQUATE FOR PERIODIC SPECIAL INSPECTIONS.
   - D. CONCRETE

ITEM		FREQUENCY OF INSPECTION
I	INSPECTION OF REINFORCING STEEL, INCLUDING PLACEMENT.	PERIODIC
II	INSPECTION OF REINFORCING STEEL WELDING	CONTINUOUS
III	INSPECT BOLTS TO BE INSTALLED IN CONCRETE PRIOR TO AND DURING PLACEMENT OF CONCRETE.	CONTINUOUS
IV	VERIFY USE OF REQUIRED DESIGN MIX.	PERIODIC
V	SAMPLING FRESH CONCRETE AND PERFORMING SLUMP, AIR CONTENT AND DETERMINING THE TEMPERATURE OF FRESH CONCRETE AT THE TIME OF MAKING SPECIMENS FOR STRENGTH TESTS.	CONTINUOUS
VI	INSPECTION FOR MAINTENANCE OF SPECIFIED CURING TEMPERATURE AND TECHNIQUES.	PERIODIC
VII	POST-INSTALLED ADHESIVE ANCHORS.	CONTINUOUS

   - E. STRUCTURAL STEEL:

ITEM		FREQUENCY OF INSPECTION
I	MATERIAL VERIFICATION OF HIGH-STRENGTH BOLTS, NUTS, AND WASHERS:	
	IDENTIFICATION MARKINGS TO CONFORM TO ASTM STANDARDS SPECIFIED IN THE APPROVED CONSTRUCTION DOCUMENTS.	PERIODIC
	MANUFACTURER'S CERTIFICATE OF COMPLIANCE REQUIRED.	PERIODIC
II	INSPECTION OF HIGH-STRENGTH BOLTING:	
	BEARING-TYPE CONNECTIONS.	PERIODIC
	SLIP-CRITICAL CONNECTIONS	CONTINUOUS
III	MATERIAL VERIFICATION OF STRUCTURAL STEEL:.	
	IDENTIFICATION MARKINGS TO CONFORM TO ASTM STANDARDS SPECIFIED IN THE APPROVED CONSTRUCTION DOCUMENTS.	PERIODIC
	MANUFACTURER'S CERTIFIED MILL TEST REPORTS REQUIRED.	PERIODIC
IV	MATERIAL VERIFICATION OF WELD FILLER MATERIALS:	
	IDENTIFICATION MARKINGS TO CONFORM TO AWS SPECIFICATION IN THE APPROVED CONSTRUCTION DOCUMENTS.	PERIODIC
	MANUFACTURER'S CERTIFICATE OF COMPLIANCE REQUIRED.	PERIODIC
V	INSPECTION OF WELDING:	
	COMPLETE AND PARTIAL PENETRATION GROOVE WELDS	CONTINUOUS
	MULTI-PASS FILLET WELDS	CONTINUOUS
	SINGLE-PASS FILLET WELDS > 5/16 INCH	CONTINUOUS
	SINGLE-PASS FILLET WELDS < 5/16 INCH	PERIODIC
	FLOOR AND DECK WELDS	PERIODIC
VI	INSPECTION OF STEEL FRAME JOINT DETAILS FOR COMPLIANCE WITH APPROVED CONSTRUCTION DOCUMENTS:	
	DETAILS SUCH AS BRACING AND STIFFENING.	PERIODIC
	MEMBER LOCATIONS	PERIODIC
	APPLICATION OF JOINT DETAILS AT EACH CONNECTION	PERIODIC

   - F. COLD FORMED METAL FRAMING

ITEM		FREQUENCY OF INSPECTION
I	WELDING	PERIODIC

   - G. SOILS

3. FOUNDATION:
   - A. SEE FOUNDATION PLANS AND GEOTECHNICAL REPORT FOR EARTHWORK REQUIREMENTS.
   - B. AN ALLOWABLE NET SOIL BEARING CAPACITY OF 2,000 PSF WAS USED IN THE DESIGN OF ALL FOOTINGS, PER GEOTECH REPORT.
   - C. FOOTINGS SHALL BE SUPPORTED ON 1.5 FT [457mm] OF COMPACTED STRUCTURAL FILL MATERIAL WRAPPED IN FILTER FABRIC, REINFORCED WITH TWO LAYERS OF APPROVED GEOGRID. THE GEOGRID REINFORCED FILL ZONE SHALL BEAR ON COMPETENT, NATIVE, POORLY GRADED SAND WITH GRAVEL OR COMPACTED STRUCTURAL FILL FOUNDED ON THIS STRATUM. GEOGRID MUST EXTEND A MINIMUM OF ONE FOOT BEYOND THE FOOTING LINE ON ALL SIDES. COORDINATE WITH GEOTECH REPORT FOR GEOGRID AND STRUCTURAL FILL REQUIREMENTS.
   - D. FOR PIPING OR OTHER UTILITIES ALONGSIDE OR PENETRATING THRU FOUNDATION WALLS RE: 2/AS3.0.
   - E. PROVIDE DAMPROOFING AT EXTERIOR FOUNDATION WALLS AT EXTERIOR FACE BELOW FINISHED GRADE.
   - F. ALL STRUCTURAL FILL MATERIAL AND PLACEMENT SHALL BE PER GEOTECHNICAL REPORT.

4. CONCRETE:
   - A. THE MINIMUMUM COMPRESSIVE STRENGTH AT 28 DAYS .....3,500 PSI
   - B. MINIMUM CLEAR COVER FOR REINFORCEMENT SHALL BE AS FOLLOWS UNLESS NOTED OTHERWISE:
     1. CONCRETE PLACED DIRECTLY AGAINST EARTH – 3 [76mm] INCHES.
     2. FORMED SURFACES: #5 BARS OR SMALLER – 1 1/2 [38mm] INCHES.
        #6 BARS OR LARGER – 2 [51mm] INCHES.
     3. STRUCTURAL SLABS – 1 [25mm] INCH.
   - C. SAWN CONTROL JOINTS SHALL BE MADE AS SOON AS POSSIBLE WITHOUT DAMAGE TO SURFACE. FILLING OF JOINTS SHALL BE DELAYED AS LONG AS POSSIBLE TO ALLOW MAX. SHRINKAGE TO OCCUR IN SLABS.
   - D. ALL REENTRANT CORNERS SHALL HAVE ADDITIONAL REINF. OF (1) #5 BAR x 5FT EXTENDING 2'-6" PAST THE CORNER.
   - E. PROVIDE (2) #3 BARS, WITH 2'-0" [610mm] PROJECTION ON ALL SIDES OF ALL OPENINGS IN CONCRETE, U.N.O.
   - F. ALL EMBEDDED ANCHOR BOLTS SHALL BE HEADED BOLTS OF MATERIAL CONFORMING TO ASTM F1554 UNLESS NOTED OTHERWISE.
   - G. CONTRACTOR SHALL PROVIDE FORMS AND FRAMING AS REQUIRED FOR ELEVATED SLABS AT EXPOSED EDGES AND OPENINGS TO MAINTAIN EDGES STRAIGHT AND PLUMB AND TRUE.
   - H. REINFORCEMENT IN FOOTINGS & STEM WALLS SHALL BE CONTINUOUS AROUND CORNERS & INTERSECTIONS, RE: S3.1-4
   - I. POST-INSTALLED ADHESIVE ANCHORS
     1. ADHESIVE FOR ANCHORS TO BE 'SIMPSON' 'SET-XP' EPOXY ADHESIVE SYSTEM
     2. ANCHORS TO BE A36 THREADED ROD OR EQUAL.
     3. MINIMUM EMBEDMENT LENGTH SHALL BE AS FOLLOWS UNLESS DETAILED OTHERWISE.

ANCHOR DIA. (IN.)	MIN. EMBEDMENT (IN.)	
3/8"	3 1/2"	[89mm]
1/2"	4 1/4"	[108mm]
5/8"	5	[127mm]
3/4"	6 5/8"	[168mm]
1"	8 1/4"	[210mm]
1 1/8"	12"	[305mm]

     4. ALL ADHESIVE ANCHORS SHALL BE INSTALLED PER THE MANUFACTURER'S RECOMMENDATIONS.

5. REINFORCING STEEL:
   - A. ASTM A615, GRADE 60. BARS TO BE WELDED SHALL BE ASTM A706, GRADE 60.
   - B. MIN. LENGTH OF LAPPED SPLICES SHALL BE AS FOLLOWS UNLESS NOTED OTHERWISE. STAGGER SPLICES IN WALLS SO THAT NO TWO ADJACENT BARS ARE SPLICED IN THE SAME LOCATION UNLESS SHOWN OTHERWISE. MAKE ALL BARS CONTINUOUS AROUND CORNERS OR PROVIDE CORNER BARS OF EQUAL SIZE AND SPACING.

BAR SIZE	SPLICE LENGTH
#3	18" [457mm]
#4	24" [610mm]
#5	30" [762mm]
#6	36" [914mm]
#7	62" [1575mm]
#8	71" [1803mm]
#9	76" [1930mm]

   - C. FORM TIES SHALL BE EITHER THREADED OR THE SNAP-OFF TYPE SO THAT NO METAL WILL BE LEFT WITHIN ONE INCH OF THE WALL SURFACE. RECESSES ARE TO BE FILLED AND POINTED W/ MORTAR.
   - D. PROVIDE BAR SUPPORTS AND SPACERS FOR REINFORCEMENT. PROVIDE CHAIRS W/ 22 GA. SAND PLATES OR PRECAST BLOCKS FOR ALL REINFORCING OF SLABS ON GRADE AND DECK CHAIRS FOR REINFORCEMENT IN SLABS OVER STEEL DECKING. SECURELY TIE REINFORCEMENT TO SUPPORTS.
   - E. DO NOT WELD ANY REINFORCEMENT UNLESS SPECIFICALLY DETAILED.
   - F. WELDED WIRE FABRIC SHALL CONFORM TO ASTM A185, Fy=75,000 PSI.

6. STRUCTURAL STEEL:
   - A. STEEL DESIGNATIONS: WIDE FLANGE SHAPES (BEAMS & COLUMNS)..... ASTM A992
     - OTHER ROLLED SHAPES & MISCELLANEOUS PLATE ..... ASTM A36 (U.N.O.)
     - MOMENT FRAME CONNECTION CONTINUITY AND WEB DOUBLER PLATES.... ASTM A572
     - HOLLOW STRUCTURAL SECTIONS (HSS) ..... ASTM A500, GRADE 'B'
   - B. FIELD CONNECTIONS SHALL BE MADE WITH 3/4" DIA. A325 BOLTS UNLESS NOTED OTHERWISE. IF A CERTAIN SITUATION IS NOT DETAILED USE A SIMILAR DETAIL. CONNECTIONS SHALL GENERALLY FOLLOW THE TYPES SHOWN IN AISC MANUAL OF STEEL CONSTRUCTION.
   - C. ALL ELEVATIONS AND HEIGHTS GIVEN ARE FROM THE FINISHED FIRST FLOOR DATUM ELEVATION, WHICH IS SET AT 100'-0".
   - D. BASE PLATE ANCHOR ROD HOLES MAY BE OVERSIZED AS FOLLOWS:

ROD DIA.(IN)	HOLE DIA.(IN)	MIN. WASHER DIA.(IN)	WASHER THICKNESS
3/4"	15/16"	1 7/8"	5/16"
1"	1 3/8"	2 5/8"	3/8"

     - SQUARE PLATE WASHERS FABRICATED FROM ASTM A36 MATERIAL ARE ACCEPTABLE, MIN. SIDE LENGTH = MINIMUM DIAMETER.
   - E. COMPLETE JOINT PENETRATION WELDS BETWEEN BEAM FLANGES AND COLUMNS SHALL BE CONSTRUCTED AS FOLLOWS. TOP FLANGE: EITHER REMOVE WELD BACKING, BACKGOUGE, AND ADD 5/16" MIN. FILLET WELD OR LEAVE BACKING IN PLACE AND ADD 5/16" FILLET UNDER BACKING. BOTTOM FLANGE: REMOVE WELD BACKING, BACKGOUGE, AND ADD 5/16" MINIMUM FILLET WELD.
   - F. WELD ACCESS HOLES AT MOMENT CONNECTIONS SHALL BE AS RECOMMENDED BY THE FEDERAL EMERGENCY MANAGEMENT AGENCY, FEMA 350, CHAPTER 3.
   - G. WELDING ELECTRODES OR WIRES: AWS A5.1 OR A5.5, E70XX; AWS A5.18, E70S-X; AWS A5.20, E7XT-X.
   - H. ERECTION AND FABRICATION IN ACCORDANCE WITH AISC "SPECIFICATIONS FOR DESIGN, FABRICATION, AND ERECTION OF STRUCTURAL STEEL FOR BUILDINGS". WELDING SHALL CONFORM TO AWS "CODE FOR ARC AND GAS WELDING IN BUILDING CONSTRUCTION". ALL WELDING SHALL BE PERFORMED BY AWS CERTIFIED WELDERS. ALL COLUMNS AND BEAMS TO BE FROM UNSPLICED LENGTHS UNLESS NOTED OTHERWISE ON THE DRAWINGS. SUBMIT SHOP DRAWINGS SHOWING SIZES, DIMENSIONS AND REQUIRED CONNECTION DETAILS FOR REVIEW BY THE ENGINEER OF RECORD PRIOR TO FABRICATION.
   - I. FIELD WELDS: WELDING OF STRUCTURAL STEEL SHALL BE PERFORMED IN THE SHOP WHENEVER PRACTICAL. AN EFFORT HAS BEEN MADE TO INDICATE WELDS THAT CAN BE OR SHOULD BE FIELD WELDED. IT IS, HOWEVER, THE FABRICATORS RESPONSIBILITY TO DECIDE WHERE AND HOW THE WELDING IS TO BE ACCOMPLISHED TO ACHIEVE THE INTENDED RESULT.

7. STEEL JOISTS:
   - A. THE STEEL JOIST MANUFACTURER SHALL BE RESPONSIBLE FOR ALL ATTACHMENTS, CROSS BRACING, AND BRIDGING THAT IS NOT SHOWN ON PLAN.
   - B. LATERAL BRACING OF THE BOTTOM CHORD OF THE JOIST GIRDERS SHALL BE PROVIDED IN ACCORDANCE WITH THE MANUFACTURERS RECOMMENDATIONS.
   - C. CEILING EXTENSIONS SHALL BE PROVIDED ON ALL JOISTS WHERE CEILINGS ARE INDICATED ON ARCHITECTURAL DRAWINGS. ALSO THE BOTTOM CHORDS OF THE JOIST NEED TO BE EXTENDED IN AREAS WHERE THE SUSPENDED WALLS ARE SUPPORTED CLOSE TO THE JOIST BEARING.
   - D. JOIST MANUFACTURER SHALL SUBMIT CALCULATIONS STAMPED BY AN ENGINEER LICENSED IN THE STATE IN WHICH THE PROJECT IS LOCATED, TO THE ENGINEER OF RECORD FOR REVIEW AND APPROVAL. JOIST SIZES INDICATED ON PLANS ARE FOR STANDARD UNIFORM LOADING CONDITIONS ONLY AND SHALL BE DESIGNED AS SPECIAL JOIST, WHEN REQUIRED, DUE TO ADDITIONAL LOADS. ADDITIONAL LOADS DUE TO ROOF TOP UNITS/ SNOW LOADS/ SUSPENDED WALL LOADS, PATIENT LIFTS ETC. WHERE APPLICABLE MUST BE CONSIDERED FOR JOIST DESIGN.
   - E. DESIGN JOISTS FOR ANY ADDITIONAL LOADS THAT ARE NOTED ON THE PLANS. JOISTS SHALL BE DESIGNED FOR SUSPENDED WALL LOADS OF 100 PLF, WHERE APPLICABLE. REFER TO ARCHITECTURAL DRAWINGS FOR LOCATIONS AN DETAILS.
   - F. OPEN WEB STEEL JOISTS SHALL BEAR 2 1/2" [64mm] MIN. ON STEEL AND 4" [102mm] MIN. ON CONCRETE, 1/4"x2" LONG FILLET WELD AT LH SERIES JOISTS & 1/8"x2" LONG FILLET WELD AT K SERIES JOISTS AT EACH SIDE OF BEARING SEAT AT ALL JOIST TO STEEL MEMBER CONNECTIONS EXCEPT AT COLUMNS, WHERE BOLTED CONNECTIONS SHALL BE PROVIDED.
   - G. ANCHOR EVERY END JOIST TO A WALL OR STRUCTURAL MEMBER AT EACH LINE OF BRIDGING.
   - H. ALL JOISTS SHALL HAVE 5" [127mm] BEARING DEPTHS.
   - I. DESIGN ALL JOISTS FOR UPLIFT PER PLAN.
   - J. JOIST DESIGNER SHALL CONSIDER ADDITIONAL DRIFTING SNOW LOAD ACCUMULATIONS AT ALL ROOF TOP EQUIPMENT, PARAPETS AND FRAMED WALL PROJECTIONS EXCEEDING 2'-0" [610mm] AND LENGTHS EXCEEDING 10'-0" [3048mm] AS SHOWN ON PLANS.

8. STEEL FLOOR DECK:
   - A. USE W2 FORMLOK DECK (VERCO), 20 GA., PAINTED. DECK TO BE CONTINUOUS OVER THREE SPANS. RE: FRAMING PLANS FOR CONCRETE TOPPING THICKNESS.
   - B. 3/4" DIA X 3 1/2" H.C.A.'S AS NOTED ON PLANS BY # GIVEN ADJACENT TO BEAM REFERENCE. ANCHORS TO BE UNIFORMLY DISTRIBUTED ALONG BEAM LENGTH
   - C. THE FASTENING SHALL BE:
     - SIDE LAPS.....BUTTON PUNCH AT 24" [610mm] O.C.
     - ENDS.....(4) 5/8" DIA. ARC SPOT WELDS PER PANEL
     - BUILDING PERIMETER.....5/8" DIA. ARC SPOT WELDS AT 6" [152mm] O.C.
     - INTERMEDIATE SUPPORTS.....(4) 5/8" DIA. ARC SPOT WELDS PER PANEL
   - D. ALL OPENINGS GREATER THAN 12"X12" SHALL BE FRAMED IN ANGLES, COORDINATE WITH MECHANICAL PLAN FOR EXACT LOCATION, RE: S3.4-20
   - E. THE ELEVATED CONC. DECK SHALL BE REINFORCED WITH 6X6-W2.9xW2.9 WWF. LOCATED 1" [25mm] FROM TOP OF CONCRETE.
   - F. ASSEMBLED COMPOSITE DECK W/ LIGHT WEIGHT CONCRETE TOPPING SHALL HAVE MIN. (2) HOUR U.L. FIRE RATING, CW/ ARCH.
   - G. CONTRACTOR SHALL PROVIDE POURSTOPS AT ALL CONC. EDGE ABLE TO SUPPORT WET WEIGHT OF CONC. AND OTHER CONSTRUCTION LOADS W/ DEFLECTION NO MORE THAN 1/16" FROM HORIZONTAL, UNLESS NOTED OTHERWISE.
   - H. ARC SPOT WELDS MAY BE ELIMINATED WHERE THEY COINCIDE WITH SHEAR CONNECTORS.
   - I. RE: S3.4-20 FOR FRAMING REQUIRED AT FLOOR PENETRATIONS UNLESS DETAILED OTHERWISE.

9. STEEL ROOF DECK:
   - A. TYPICAL ROOF DECK:
     1. USE VERCO HSB-36 DECK, PAINTED.
     2. RE: ROOF FRAMING PLANS FOR ATTACHMENT REQUIREMENTS.
     3. COORDINATE ALL OPENINGS IN THE ROOF DECK WITH MECHANICAL AND ARCHITECTURAL DISCIPLINE.
     4. DECK MUST BE CONTINUOUS OVER 3 SPANS UNLESS OTHERWISE SHOWN.
   - B. SUBSTITUTIONS:
     1. 'VERCO' PUNCHLOCK CAN BE USED IN LIEU OF TOP SEAM WELDS AT SAME SPACING

10. STRUCTURAL COLD FORMED STEEL FRAMING:
    - A. ALL STRUCTURAL MEMBERS SHALL HAVE A MIN. YIELD STRNGTH OF Fy= 50 KSI.
    - B. ALL CONNECTIONS SHALL BE WELDED (UNLESS NOTED OTHERWISE) BY A CERTIFIED WELDER AND SHALL BE 1/16" MIN. FILLET WELDS & 1/8" MIN. FLARE BEVEL WELDS. IF A CERTAIN CONNECTION IS NOT DETAILED, USE A SIMILAR DETAIL.
    - C. MINIMUM NET EFFECTIVE SECTION PROPERTIES SHALL BE PER SCAFCO STEEL STUD MFR. COMPANY TABLES OR EQUIVALENT.
    - D. TYPICAL STUD SPACING SHALL BE 16" O.C. UNLESS NOTED OTHERWISE ON PLANS
    - E. PROVIDE STRAP/BLOCKING AT 4'-0" O.C. FULL HEIGHT OF WALLS PER 3 AND 4/AS3.1 TYP.
    - F. SEE 5 AND 10/AS3.1 FOR TYPICAL HEAD, SILL, AND JAMB DETAILING.
    - G. CW/ ARCH. FOR ALL NON-STRUCTURAL STUD WALL FRAMING.

100% SUBMITTAL

REVISIONS	DATE

CSHQA
C.W. MOORE PLAZA
250 S. 5TH ST. BOISE, ID 83702
(208) 343-4635 FAX (208) 343-1858
http://www.cshqa.com

AHJ ENGINEERS, PC
STRUCTURAL CONSULTANTS
5418 N. EAGLE RD. #140
BOISE, IDAHO 83713
(208) 323-0199
PROJECT # 11040.00

STRUCTURAL DETAILS AND CONCEPTS COPYRIGHT © BY AHJ ENGINEERS, P.C.

PROFESSIONAL ENGINEER REGISTERED 8/14/12 STATE OF IDAHO DAVID W. HAUGLAND

CAD FILE NAME: 531-319_AS0.1.dwg
XREF FILE NAME: 531-319_xa.42x30s.ttb.dwg

DRAWING TITLE: GENERAL STRUCTURAL NOTES	PROJECT TITLE: BOISE VAMC NEW EXTENDED CARE UNIT BUILDING 'A' CLC			DATE: 12/01/2011
APPROVED: CHIEF OF FACILITY MANAGEMENT SERVICE	BUILDING NUMBER: 121	CHECKED: D.H.	DRAWN: G.V.	PROJECT NO.: 531-319
APPROVED: MEDICAL CENTER DIRECTOR	LOCATION: VAMC BOISE, IDAHO			DRAWING NO.: AS0.1
				DWG 20 OF 58

DEPARTMENT OF VETERANS AFFAIRS

P:\11\11040-CSHQA VA CLC\02-Structural\BLDG-A\AS0.1.dwg, 30x42, 2/14/2012 8:19:27 AM
Username: grandrok
May 14, 2012 – 9:19am
P:\11\11040-CSHQA VA CLC\02-Structural\BLDG-A\AS0.1.dwg

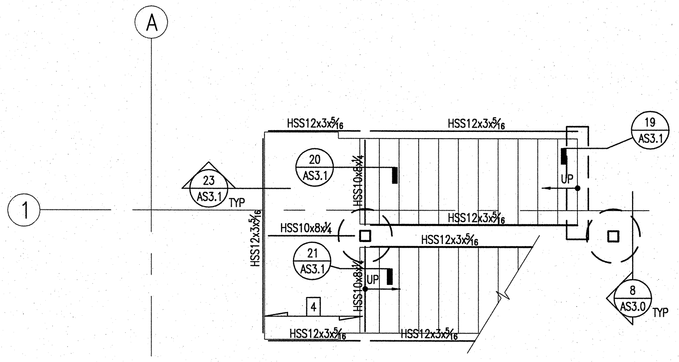

3 STAIR PLAN BUILDING 'A'

SCALE: 1/4 "=1'-0"

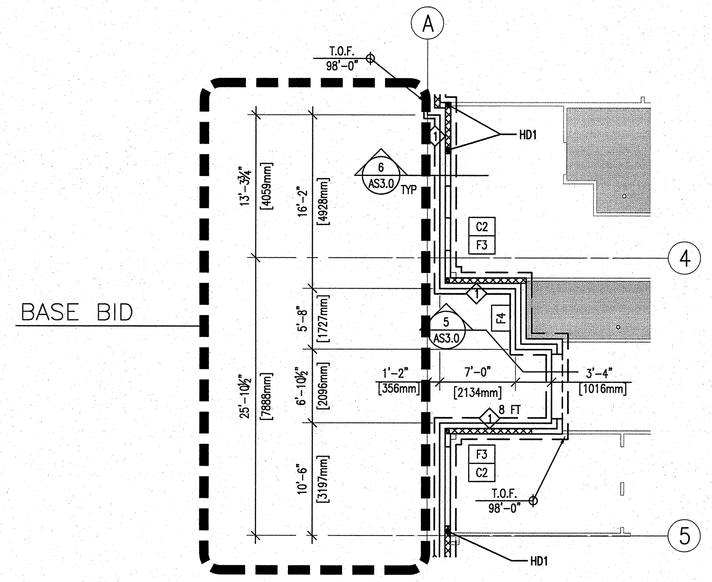

2 PARTIAL FOUNDATION PLAN BLDG. 'A'

SCALE: 1/8 "=1'-0"

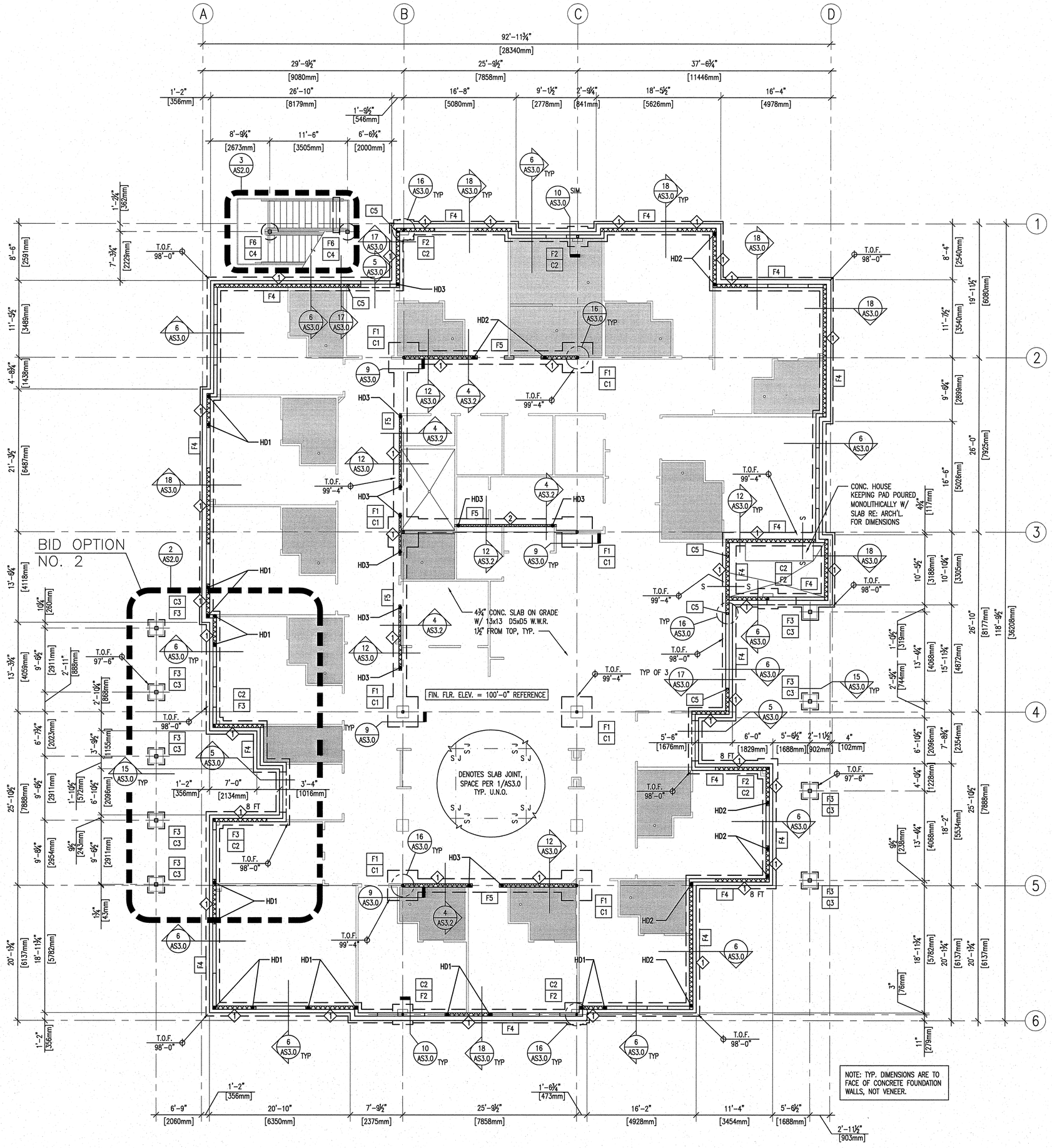

1 FOUNDATION PLAN BUILDING 'A'

SCALE: 1/8 "=1'-0"

PLAN NOTES

1. FOR GENERAL STRUCTURAL NOTES (G.S.N.), SEE SHEET AS0.1.
2. THE DIMENSIONS SHOWN HERE APPLY TO STRUCTURAL ELEMENTS ONLY SEE ARCHITECTURAL PLANS FOR OTHER DIMENSIONS.
3. DENOTES SLAB JOINT, PER DETAIL 1/AS3.0.
4. T.O.F. 98'-0" — DENOTES ELEVATION. T.O.F. = TOP OF FOOTING
5. C1 — DENOTES COLUMN MARK NUMBER. SEE COLUMN SCHEDULE BELOW.
6. F1 — DENOTES FOOTING MARK NUMBER. SEE FOOTING SCHEDULE BELOW.
7. DENOTES EXTERIOR COLD FORMED STEEL STUD WALL W/ BRICK VENEER. STUDS: 600S162-43 AT 16" O.C. SHEATHING AND VENEER PER ARCH'L. DRAWINGS.
8. 2 — DENOTES COLD FORMED STEEL STUD SHEARWALL W/ STUDS: 600S162-43 AT 16" O.C. SHEATHING: 22GA STL. SHEET LAMINATED TO ⅝" DENS-GLASS GOLD (EXTERIOR WALLS) OR ⅜" TYPE 'X' GYP BOARD (INTERIOR WALLS) (CEMCO SURE BOARD) W/ #8 SCREWS PER SHEARWALL SCHEDULE. ORIENT STEEL SHEET FACE TO STUDS. VENEER PER ARCH'L. DRAWINGS. 'X' DENOTES SHEAR WALL TYPE PER 1/AS3.2.
9. NOT USED.
10. HD — DENOTES HOLD DOWN, PER HOLD DOWN SCHEDULE 4/AS3.2.
11. 4 — DENOTES 2" DEEP BAR GRATING BY McNICOLS OR APPROVED EQUIVALENT. DEFLECTION MAX. = L/180 OR ¼". WELD TO ALL SUPPORTS W/ ⅛"x2" FILLET WELD AT 12" O.C.
12. S — S — DENOTES STEP IN FOOTING PER DETAIL 4/AS3.0.
13. DENOTES ¾" FLAT RECESS IN CONCRETE (4" MIN. SLAB THICKNESS) RE: ARCH'L./ PLUMBING FOR SLOPING FLOOR MATERIALS.
14. DENOTES SLOPING SLAB TO ¾" MAX. AT DRAIN (4" MIN. SLAB THICKNESS)

SCHEDULES

FOOTING SCHEDULE

MARK	SIZE	REINFORCING	COMMENTS
F1	4'-6"SQ.x24" DP.	(6) #5 EA. WAY TOP AND BOTTOM	
F2	3'-6"SQ.x12" DP.	(4) #5 EA. WAY	
F3	2'-6"SQ.x12" DP.	(3) #5 EA. WAY	
F4	2'-0" CONT.x12" DP.	(3) #5 CONT.	
F5	2'-0" CONT.x24" DP.	(3) #5 CONT. TOP AND BOTTOM W/ #3 CLOSED STIRRUPS AT 20" O.C	EXTEND REINF. INTO F1 FOOTING
F6	2'-6" DIA.x8'-0" DP.	(8) #6 VERT. #3 TIES AT 12" O.C. (3) IN TOP 5"	

COLUMN SCHEDULE

MARK	SIZE	BASE PLATE AND ANCHOR BOLTS	COMMENTS
C1	HSS4x4x½	¾"x12"x1'-0" W/ (4) ¾" DIA.x7" EMBED ANCHOR BOLTS	INTERIOR
C2	HSS3½x3x½¼	¾"x9"x0'-9" W/ (4) ¾" DIA.x7" EMBED ANCHOR BOLTS	ON RECESSED PIER
C3	HSS6x6x¼	¾"x12"x1'-0" W/ (4) ¾" DIA.x16" EMBED ANCHOR BOLTS	APPLY 1HR FIRE RATED INTUMESCENT PAINT RE: ARCH'L. DET./ SPECS.
C4	HSS8x8x½	1"x1'-4"DIA. W/ (4)1"DIA.x30" EMBED ANCHOR BOLTS W/ DBL. NUTS TOP AND BOTTOM	COLUMN, BASE PLATE AND ANCHORS TO BE GALVANIZED
C5	HSS3½x3½¼	½ x8"x0'-8" W/ (3) ⅝"DIA.x3" EMBED EPOXY BOLTS	ON TOP OF FDN. WALL, NO PIER

100% SUBMITTAL

REVISIONS | DATE

CSHQA

C.W. MOORE PLAZA
250 S. 5TH ST. BOISE, ID 83702
(208) 343-4635 FAX (208) 343-1858
http://www.cshqa.com

AHJ ENGINEERS, PC
STRUCTURAL CONSULTANTS
5418 N. EAGLE RD. #140
BOISE, IDAHO 83713
(208) 323-0199
PROJECT # 11040.00
STRUCTURAL DETAILS AND CONCEPTS
COPYRIGHT © OF AHJ ENGINEERS, P.C.

PROFESSIONAL ENGINEER REGISTERED 8454 STATE OF IDAHO 9/14/12 DAVID W. HAUGLAND

CAD FILE NAME: 531-319_AS2.0.dwg

XREF FILE NAME: 531-319_xa.42x30s.ttb.dwg 531-319_xa.fdn.notes.dwg 531-319_xa.s-base.dwg

DRAWING TITLE: FOUNDATION PLAN

APPROVED: CHIEF OF FACILITY MANAGEMENT SERVICE

APPROVED: MEDICAL CENTER DIRECTOR

PROJECT TITLE: BOISE VAMC NEW EXTENDED CARE UNIT BUILDING 'A' CLC

BUILDING NUMBER: 121 | CHECKED: D.H. | DRAWN: G.V.

LOCATION: VAMC BOISE, IDAHO

DATE: 12/01/2011

PROJECT NO.: 531-319

DRAWING NO.: AS2.0

DWG 21 OF 58

DEPARTMENT OF VETERANS AFFAIRS

Username: gvandrick
May 14, 2012 – 9:20am
P:\11\11040-CSHQA VA CLC\02-Structural\BLDG-A\AS2.0.dwg, 30x42, 8/14/2012 9:20:47 AM

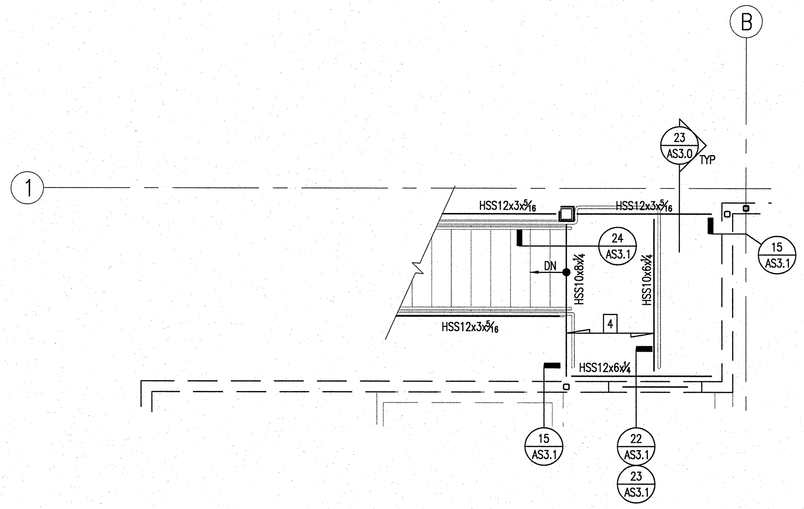

2 STAIR PLAN BUILDING 'A'

0' 2' 4' 6' 8' 10' 12'

SCALE: 1/4 "=1'-0"

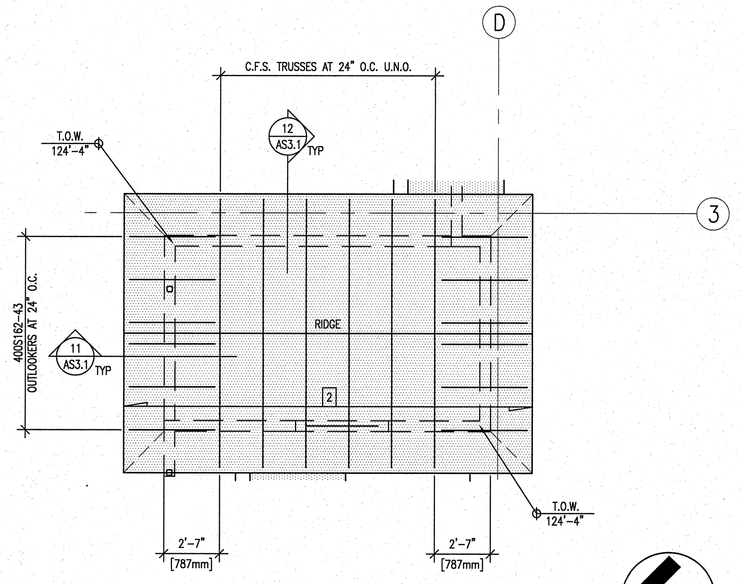

3 TOWER ROOF FRMNG. PLAN

0' 2' 4' 6' 8' 10' 12'

SCALE: 1/4 "=1'-0"

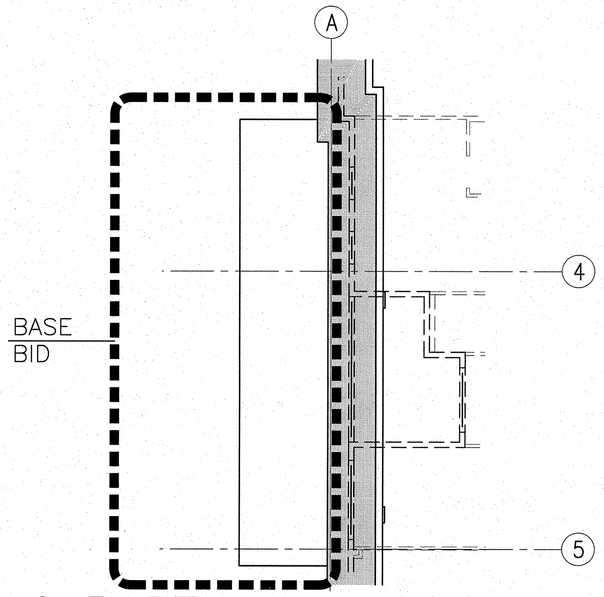

4 PARTIAL ROOF FRAMING PLAN BLDG. 'A'

0' 4' 8' 12' 16' 20' 24'

SCALE: 1/8 "=1'-0"

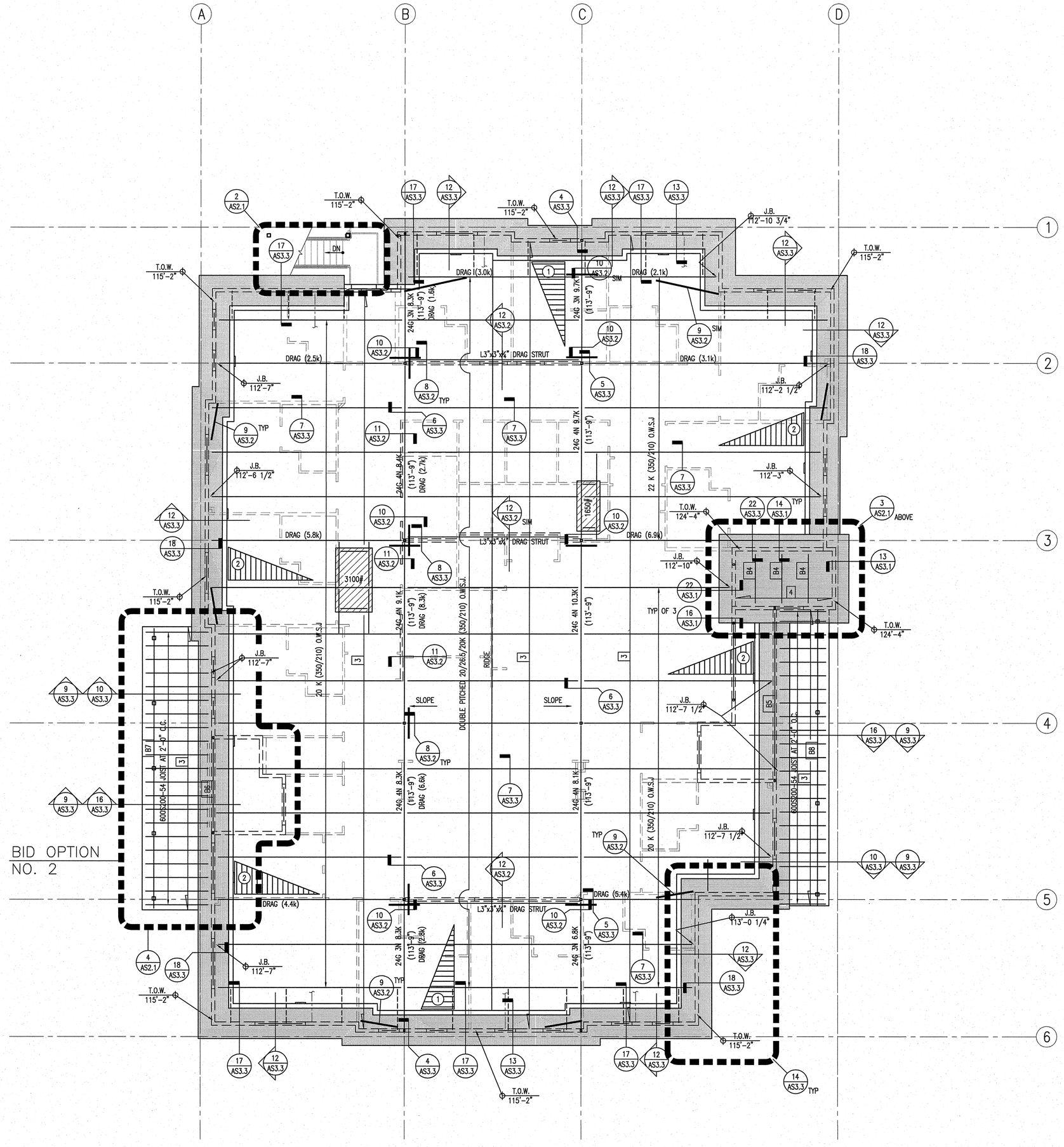

1 ROOF FRAMING PLAN BUILDING 'A'

0' 4' 8' 12' 16' 20' 24'

SCALE: 1/8 "=1'-0"

PLAN NOTES

1. FOR GENERAL STRUCTURAL NOTES (G.S.N.), SEE SHEET AS0.1.
2. THE DIMENSIONS SHOWN HERE APPLY TO STRUCTURAL ELEMENTS ONLY SEE ARCHITECTURAL PLANS FOR ANY DIMENSIONS NOT NOTED.
3. T.O.S. 100'-0" — DENOTES ELEVATION. J.B. = JOIST BEARING T.O.W. = TOP OF WALL
4. NOT UNED.
5. DENOTES LIGHT GAUGE STEEL STUD HEADER, PER DETAIL 5/AS3.1. SEE 23/AS3.3 FOR VENEER SUPPORT AT HEADERS.
6. NET UPLIFT ON ROOF JOIST = 16 PSF WITHIN 8' OF MANSARD PEAK, 9 PSF OTHERWISE.
7. 2 — 19/32 APA RATED FIRE RESISTANT PLYWOOD W/ #8 SCREWS AT 6" O.C. AT ALL EDGES (E.F.) AND 12" O.C. IN FIELD (F.F.)
8. 3 — 1½" DEEP 20 GA. TYPE "B" STEEL DECK. DECK SHALL BE BY "VERCO MANUFACTURING CO." OR APPROVED EQUIVALENT. I= 0.216 in^4 MIN.; +S= 0.235 in^3 MIN.; -S= 0.248 in^3 MIN. PROVIDE ⅝" PUDDLE WELD AT EA. FLUTE WHEN SUPPORTS ARE PERPENDICULAR AND AT 12" O.C. WHEN SUPPORT ARE PARALLEL. PROVIDE 3/16"ø BUTTON PUNCH AT SIDE LAPS AT 12" O.C.
9. 4 — DENOTES 2" DEEP BAR GRATING BY McNICOLS OR APPROVED EQUIVALENT. DEFLECTION MAX. = L/180 OR ¼". WELD TO ALL SUPPORTS W/ ⅛"x2" FILLET WELD AT 12" O.C.
10. DENOTES OVERBUILD FRAMING OVER BUILD: AT OVER BUILD AREAS PROVIDE THE FOLLOWING FRAMING. FRAME W/ COLD FORM STEEL TRUSSES AT 2'-0" O.C. WHICH BEAR ON STL. ROOF DECK AT 4'-0" O.C. MAX. SHEATH ALL OVERBUILD FRAMING W/ FIRE RESISTANT WOOD PLYWOOD. SEE TYPE 2 ABOVE.
11. WT. PER PLAN — ROOF SUPPORTED OR FLOOR MOUNTED MECH'L. UNIT W/ OPERATING WEIGHT. SEE DETAIL 1/AS3.3. COORD. EXACT LOCATION, SIZE AND NUMBER OF DECK PENETRATIONS W/ MECH'L.
12. PRIMARY STRUCTURAL ELEMENTS: APPLY 1HR SPRAY ON FIREPROOFING TO ALL BEAMS, COLUMNS AND JOISTS EXCEPT THOSE WRAPPED IN 2 LAYERS OF GYPSUM BOARD (RE: ARCH'L.) OR THOSE TO BE COATED W/ INTUMESCENT PAINT (RE: STRUCT. AND ARCH'L.) OR GALVANIZED.
13.

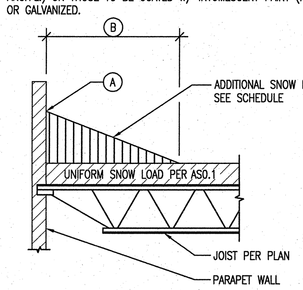

SCHEDULES

SNOW DRIFT SCHEDULE

MARK #	MAX DRIFT LOAD	EXTENT OF DRIFT
	A	B
1	29 PSF	6'-0"
2	23 PSF	4'-6"

NOTES:
1. THESE SNOW LOADS ARE IN ADDITION TO REGULAR SNOW LOADING.
2. JOIST MFR. TO INCORPORATE THESE ADD'L. LOADS INTO THEIR DESIGN.

BEAM SCHEDULE

MARK	SIZE	TOP OF BEAM ELEVATION	COMMENTS
B4	L4x4x5/16"	113'-9"	
B5	HSS18x6x5/16"	112'-2"	APPLY 1HR FIRE RATED INTUMESCENT PAINT RE: ARCHITECTURAL DETAILS AND SPECS
B6	HSS12x6x3/16"	111'-8"	
B7	HSS8x6x1/4"	112'-5"	
B8	HSS8x6x1/4"	112'-6"	

100% SUBMITTAL

REVISIONS | DATE

CSHQA

C.W. MOORE PLAZA
250 S. 5TH ST. BOISE, ID 83702
(208) 343-4635 FAX (208) 343-1858
http://www.cshqa.com

AHJ ENGINEERS, PC
STRUCTURAL CONSULTANTS
5418 N. EAGLE RD. #140
BOISE, IDAHO 83713
(208) 323-0199
PROJECT # 11040.00
STRUCTURAL DETAILS AND CONCEPTS COPYRIGHT © OF AHJ ENGINEERS, P.C.

PROFESSIONAL ENGINEER REGISTERED STATE OF IDAHO DAVID W. HAUGLAND 5/14/12

CAD FILE NAME: 531-319_AS2.1.dwg

XREF FILE NAME:
531-319_xa.42x30s.ttb.dwg
531-319_xa.roof notes.dwg
531-319_xa.s-base.dwg
531-319_xa_roof plan.dwg

DRAWING TITLE: ROOF FRAMING PLAN

APPROVED: CHIEF OF FACILITY MANAGEMENT SERVICE

APPROVED: MEDICAL CENTER DIRECTOR

PROJECT TITLE: BOISE VAMC NEW EXTENDED CARE UNIT BUILDING 'A' CLC

BUILDING NUMBER: 121 | CHECKED: D.H. | DRAWN: G.V.

LOCATION: VAMC BOISE, IDAHO

DATE: 12/01/2011

PROJECT NO. 531-319

DRAWING NO. AS2.1

DWG 22 OF 58

DEPARTMENT OF VETERANS AFFAIRS

P:\11511\04-CSHQA VA CLC\00-Structural\BLDG-A\AS2.1.dwg, 30x42, SY14(2012)\22-19 AM

Username: gvondrak
May 14, 2012 – 9:22am
P:\11511\04-CSHQA VA CLC\02-Structural\BLDG-A\AS2.1.dwg

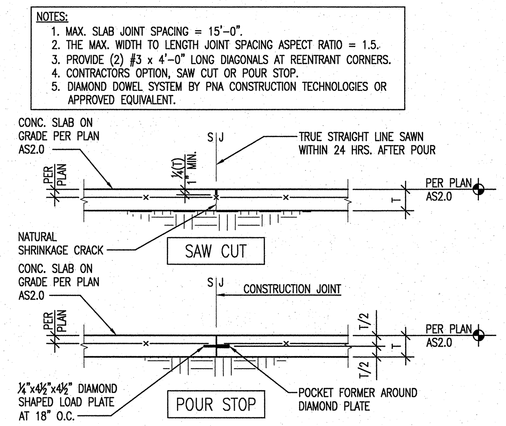

1 SLAB JOINT
SCALE: NONE

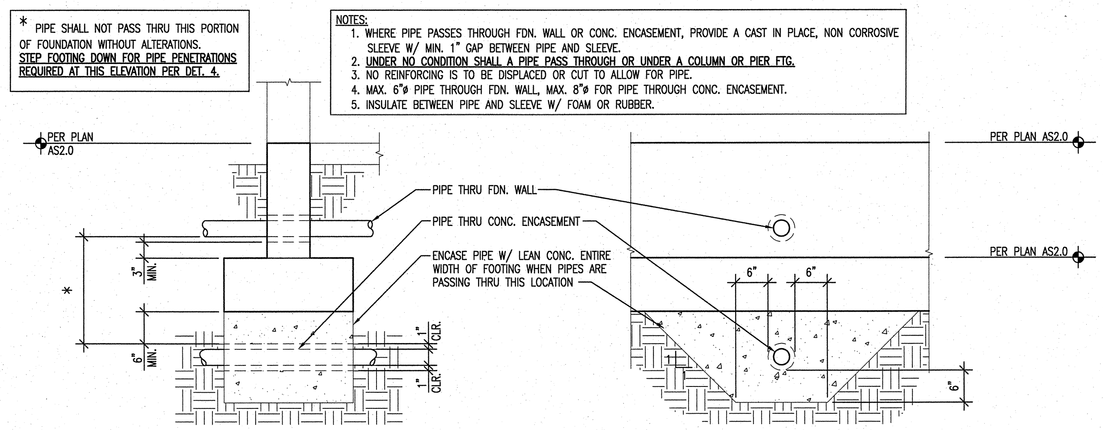

2 PIPE THROUGH CONCRETE OR MASONRY FOUNDATION WALL AND UNDER FOOTING (TYP. FOR INT. OR EXT. CONDITIONS)
SCALE: NONE

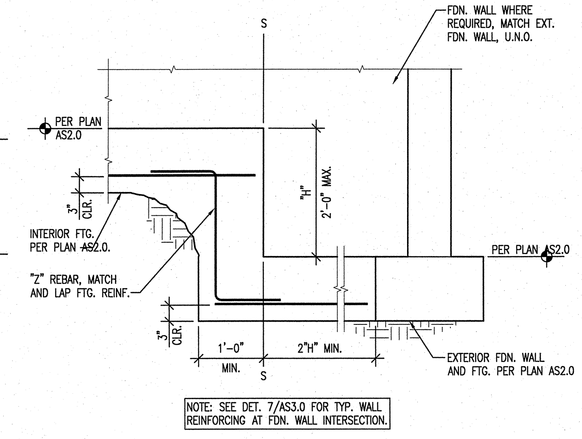

4 STEPPED FOOTING INTERIOR TO EXTERIOR
SCALE: NONE

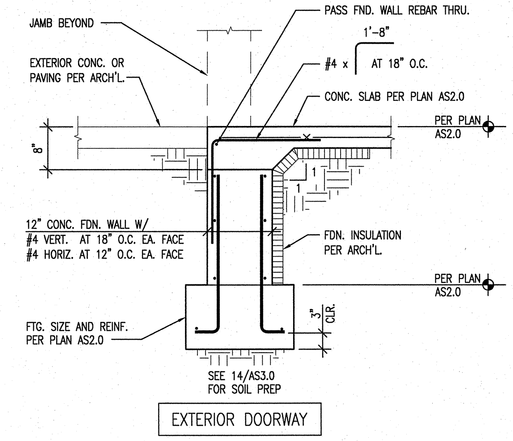

5 SLAB OVER FOUNDATION WALL AT EXTERIOR DOORWAY
SCALE: NONE

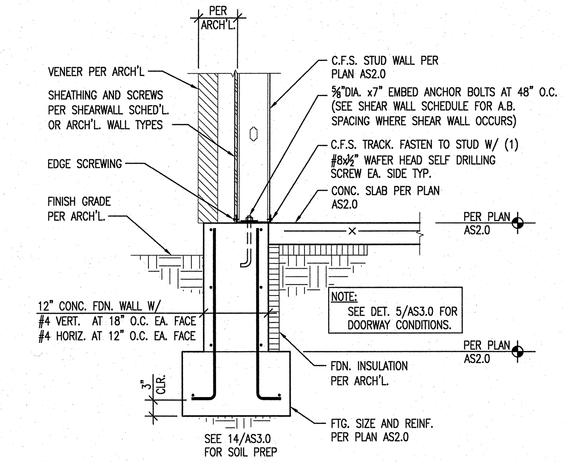

6 C.F.S. STUD WALL AT EXTERIOR FOOTING
SCALE: NONE

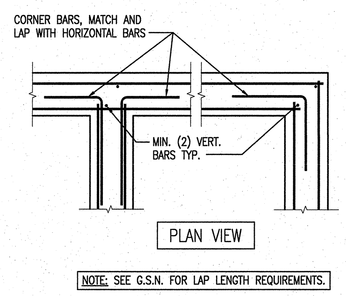

7 TYP. CONC. OR MASONRY WALL REINF. AT INTERSECTION AND CORNER
SCALE: NONE

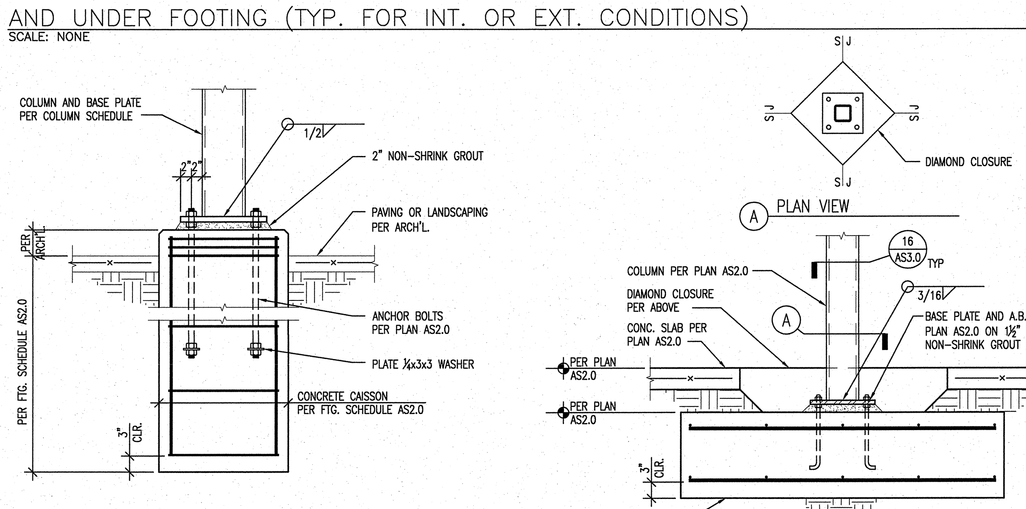

8 EXTERIOR STAIR FOOTING
SCALE: NONE

9 STEEL COLUMN – INTERIOR FOOTING
SCALE: NONE

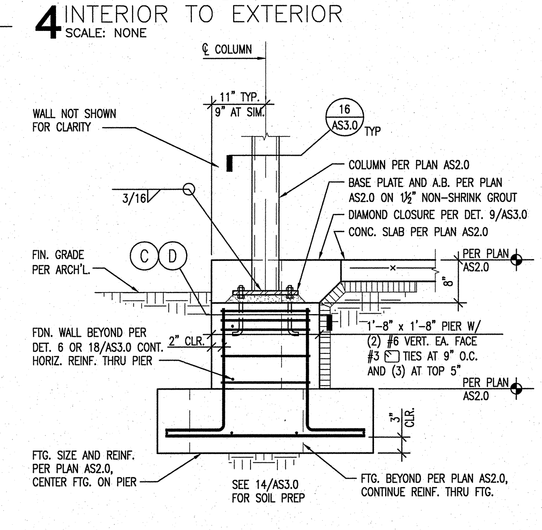

10 COLUMN FOOTING AT FOUNDATION WALL
SCALE: NONE

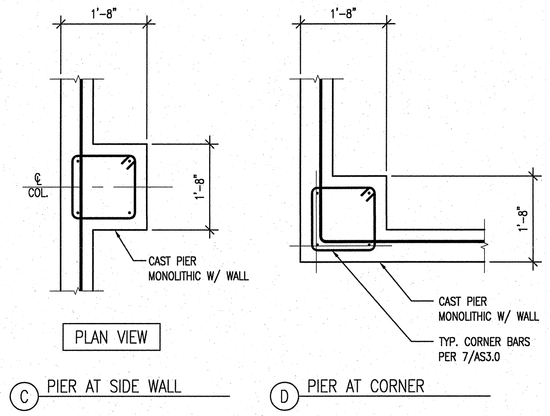

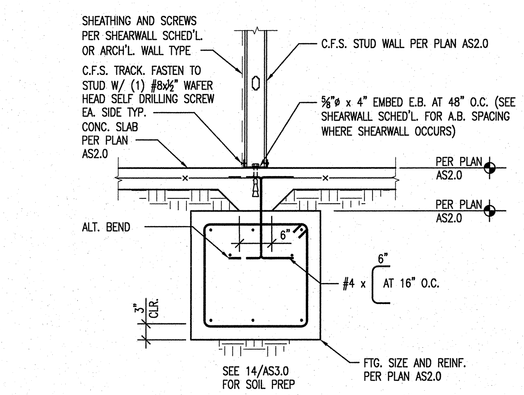

12 C.F.S. STUD WALL AT INTERIOR FOOTING
SCALE: NONE

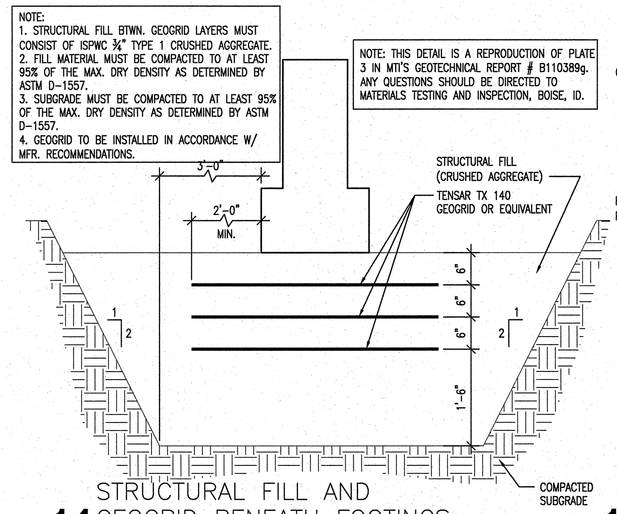

14 STRUCTURAL FILL AND GEOGRID BENEATH FOOTINGS
SCALE: NONE

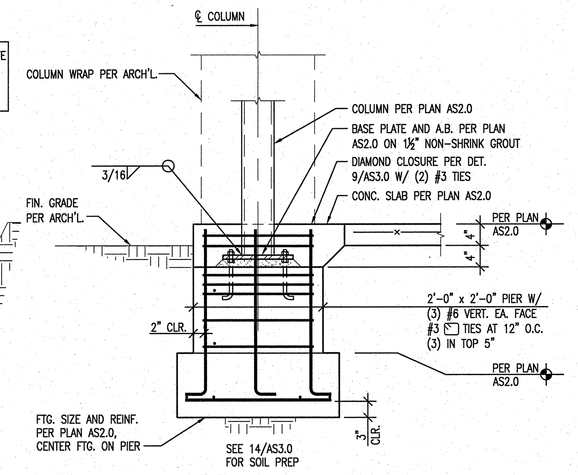

15 CANOPY COLUMN
SCALE: NONE

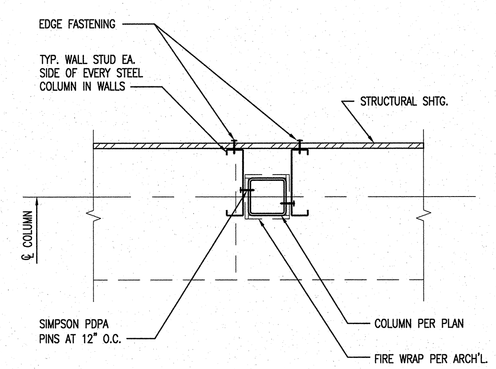

16 COLUMN IN STUD WALL
SCALE: NONE

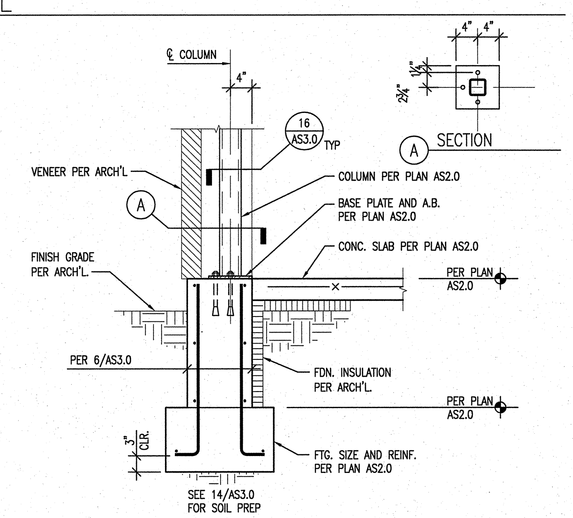

17 COLUMN ON STEM WALL
SCALE: NONE

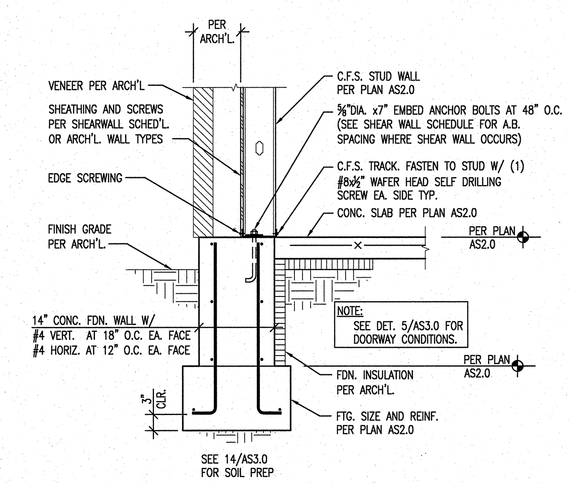

18 C.F.S. STUD WALL AT EXTERIOR FOOTING
SCALE: NONE

100% SUBMITTAL

REVISIONS | DATE

CSHQA

C.W. MOORE PLAZA
250 S. 5TH ST. BOISE, ID 83702
(208) 343-4635 FAX (208) 343-1858
http://www.cshqa.com

AHJ ENGINEERS, PC
STRUCTURAL CONSULTANTS
5418 N. EAGLE RD. #140
BOISE, IDAHO 83713
(208) 323-0199
PROJECT # 11040.00
STRUCTURAL DETAILS AND CONCEPTS
COPYRIGHT © OF AHJ ENGINEERS, P.C.

PROFESSIONAL ENGINEER 8/4/54 8/14/12 STATE OF IDAHO DAVID W. HAVGLAND

CAD FILE NAME: 531-319_AS3.0.dwg
XREF FILE NAME: 531-319_xa.42x30s.ttb.dwg 531-319_xa.struct.det.dwg

DRAWING TITLE: STRUCTURAL DETAILS
APPROVED: CHIEF OF FACILITY MANAGEMENT SERVICE
APPROVED: MEDICAL CENTER DIRECTOR

PROJECT TITLE: BOISE VAMC NEW EXTENDED CARE UNIT BUILDING 'A' CLC
BUILDING NUMBER: 121 | CHECKED: D.H. | DRAWN: G.V.
LOCATION: VAMC BOISE, IDAHO

DATE: 12/01/2011
PROJECT NO. 531-319
DRAWING NO. AS3.0
DWG 23 OF 58

DEPARTMENT OF VETERANS AFFAIRS

Username: gvandrak
May 14, 2012 – 9:24am
P:\11\11040-CSHQA VA CLC\02-Structural\BLDG-A\AS3.0.dwg, 30x42, 5/14/2012 9:24:00 AM

C.F.S. STUD PRODUCT IDENTIFICATION INFORMATION

ALL SSMA PRODUCTS HAVE A FOUR PART IDENTIFICATION CODE WHICH IDENTIFIES THE SIZE (BOTH DEPTH AND FLANGE WIDTH), STYLE AND MATERIAL THICKNESS OF EACH MEMBER.

MEMBER DEPTH:
(EXAMPLE: 6" = 600x1/100 INCHES).
ALL MEMBERS DEPTH ARE TAKEN IN 1/100 INCHES.
FOR ALL "T" SECTIONS MEMBERS DEPTH IS THE INSIDE TO INSIDE DIMENSIONS.

FLANGE WIDTH:
(EXAMPLE: 1 5/8" = 1.625" ~ 162x1/100 INCHES)
ALL FLANGE WIDTHS ARE TAKEN IN 1/100 INCHES

MATERIAL THICKNESS:
(EXAMPLE: 0.054 IN. = 54 MILS: 1MIL = 1/1000 IN).
MATERIAL THICKNESS IS THE MINIMUM BASE METAL THICKNESS IN MILS.
MINIMUM BASE METAL THICKNESS REPRESENTS 95% OF THE DESIGN THICKNESS.

600 S 162 – 54

STYLE:
(EXAMPLE: STUD OR JOIST SECTION = S)
THE FOUR ALPHA CHARACTERS UTILIZED ARE:
S = STUD OR JOIST SECTIONS
T = TRACK SECTIONS
U = CHANNELS SECTIONS
F = FURRING CHANNELS SECTIONS

THICKNESS – C.F.S. COMPONENTS

MINIMUM THICKNESS (MILS)	DESIGN THICKNESS (IN)	GAUGE	REQUIRED YIELD STRENGTH
33	0.0346	20	Fy=33 KSI
43	0.0451	18	
54	0.0566	16	
68	0.0713	14	Fy=50 KSI
97	0.1017	12	

1 C.F.S. STUD PRODUCT IDENTIFICATION INFORMATION
SCALE: NONE

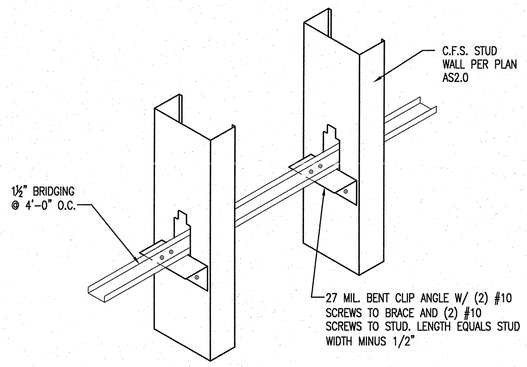

3 LATERAL BRACING FOR 4" STUD AND SMALLER LOAD BEARING WALL
SCALE: NONE

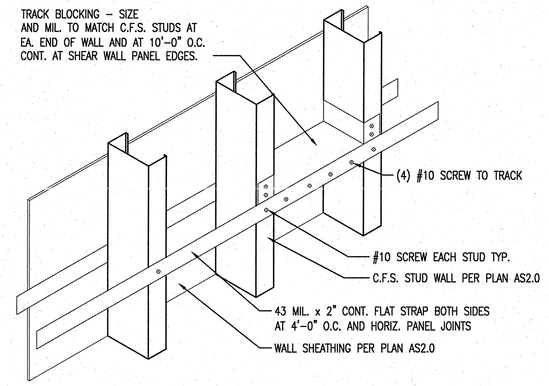

4 LATERAL BRACING FOR LARGER THAN 4" STUD LOAD BEARING WALL
SCALE: NONE

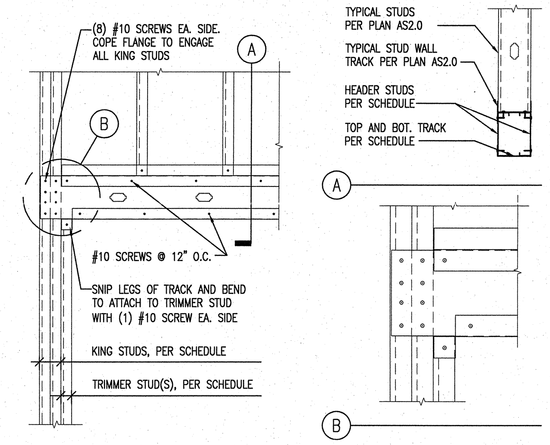

C.F.S. HEADER SCHEDULE

SPAN/MARK	HEADER STUDS	TOP AND BOT. TRACK	SILL PLATE (UNDER WINDOW)	KING STUD	TRIMMER STUD	COMMENTS
6'-0" OR LESS	(2)600S200-54	600T162-43	(1)600S162-43	(2)600S162-43	(1)600S162-43	
6'-1" TO 8'-0"	(3)800S162-54	600T162-43	(2)600S162-43	(3)600S162-43	(2)600S162-43	
8'-1" TO 12'-0"	(3)1000S162-54	600T162-43	(4)600S162-43	(4)600S162-43	(3)600S162-43	

5 TYP. C.F.S. STUD WALL HEADER
SCALE: NONE

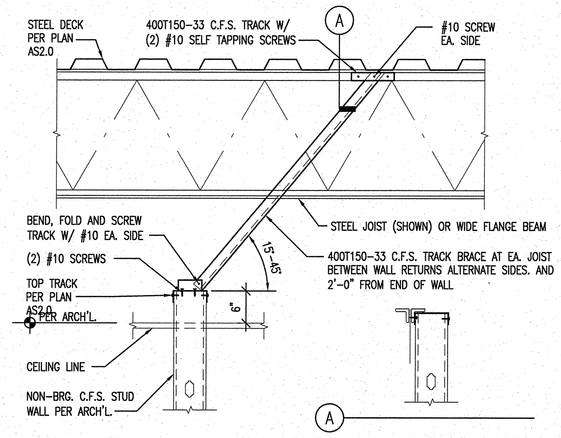

7 TYPICAL NON-BEARING C.F.S. STUD WALL SUPPORT
SCALE: NONE

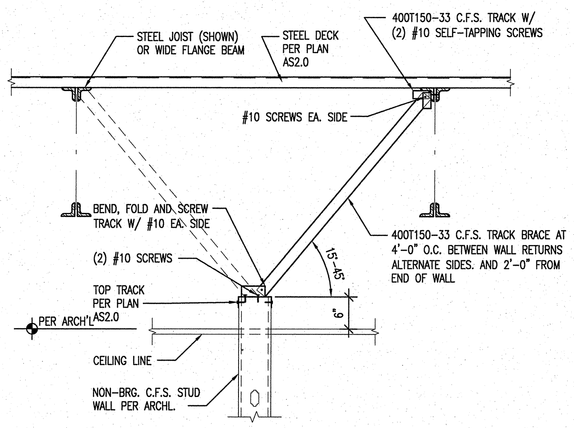

8 TYPICAL NON-BEARING C.F.S. STUD WALL SUPPORT
SCALE: NONE

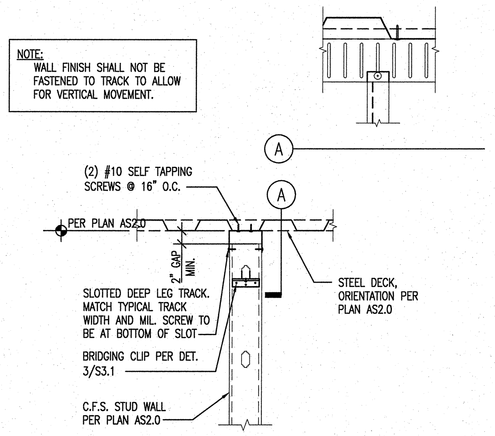

9 TYPICAL INTERIOR C.F.S. STUD WALL SLIP CONNECTION
SCALE: NONE

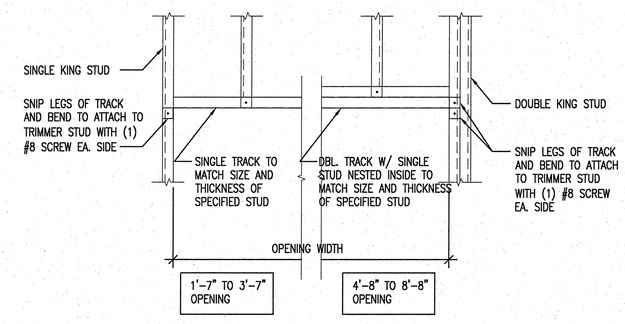

10 TYPICAL INTERIOR C.F.S. NON LOAD BEARING STUD WALL HEADER
SCALE: NONE

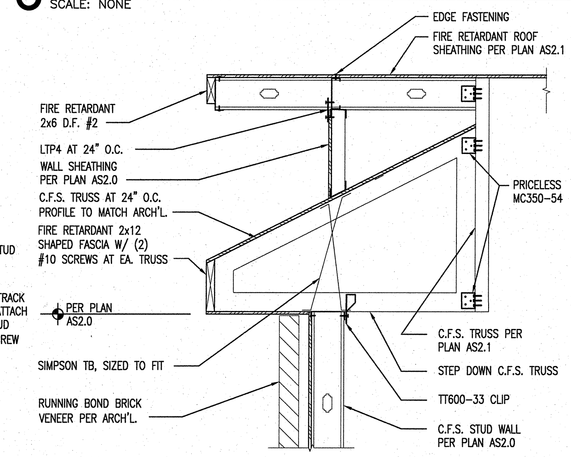

11 TOWER ROOF FRAMING
SCALE: NONE

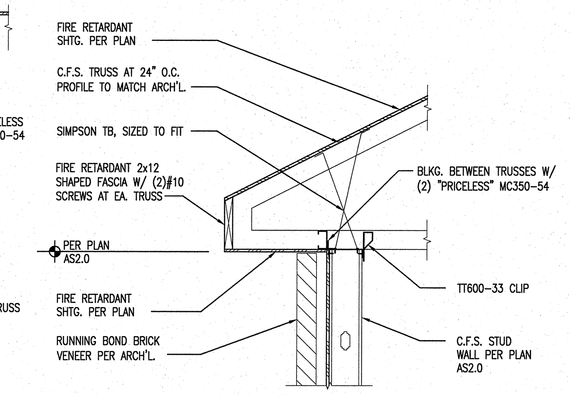

12 TOWER ROOF FRAMING
SCALE: NONE

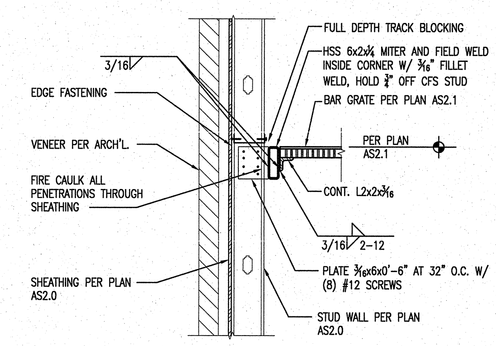

13 MECHANICAL FLOOR FRAMING
SCALE: NONE

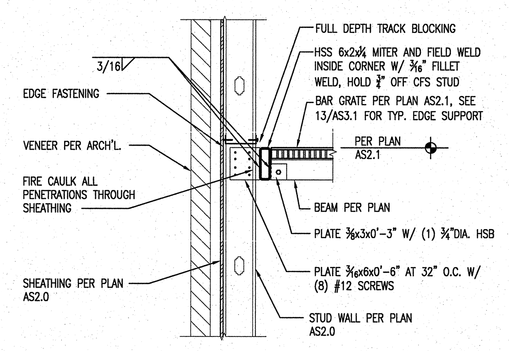

14 MECHANICAL FLOOR FRAMING
SCALE: NONE

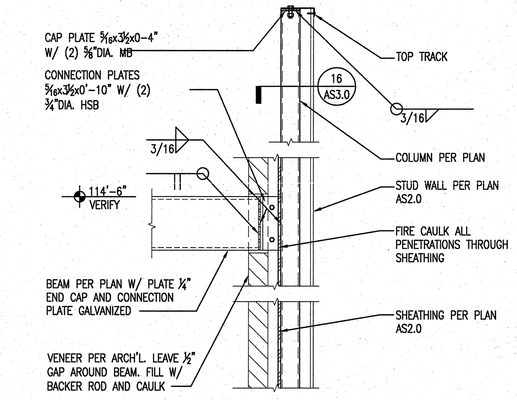

15 SPECIAL COLUMN AT STAIR BEAM
SCALE: NONE

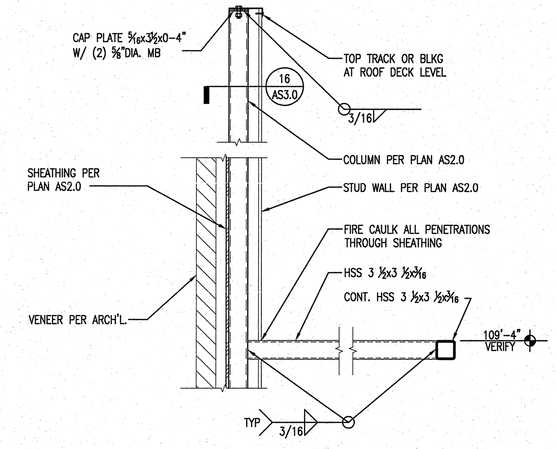

16 SPECIAL COLUMN FOR INTERIOR SOFFIT
SCALE: NONE

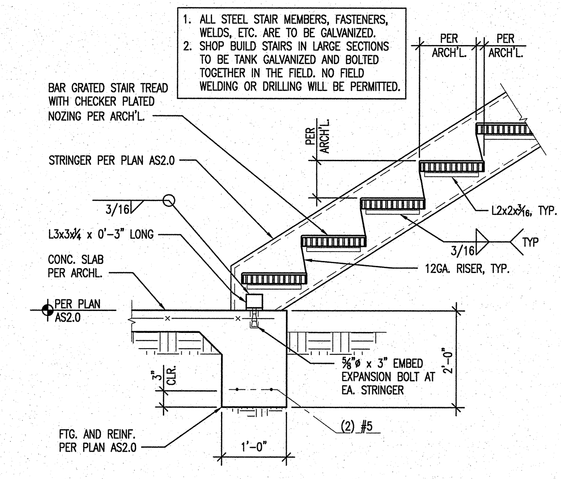

19 GRATED STEEL STAIR AT SLAB ON GRADE
SCALE: NONE

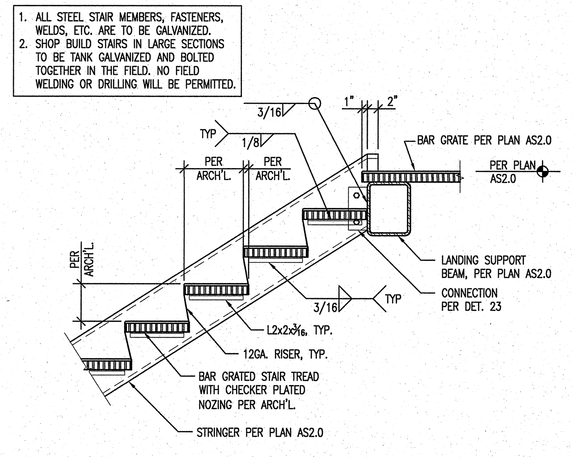

20 GRATED STEEL STAIR DOWN FROM LANDING
SCALE: NONE

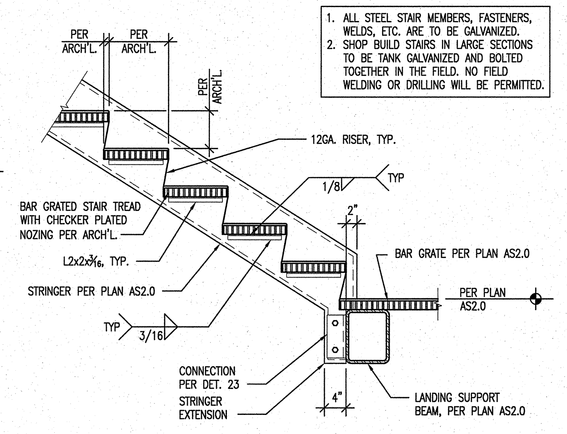

21 GRATED STEEL STAIR UP FROM LANDING
SCALE: NONE

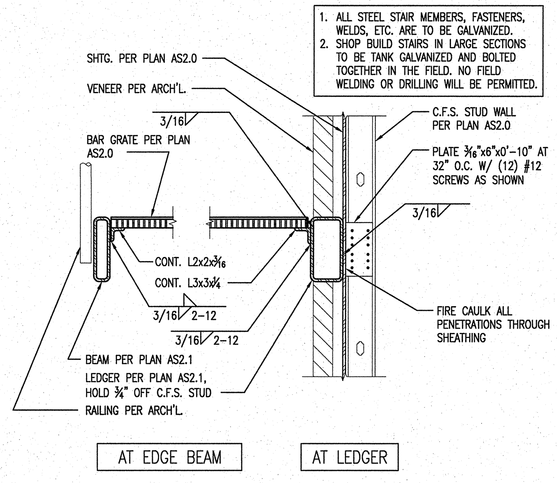

22 GRATED STEEL LANDING
SCALE: NONE

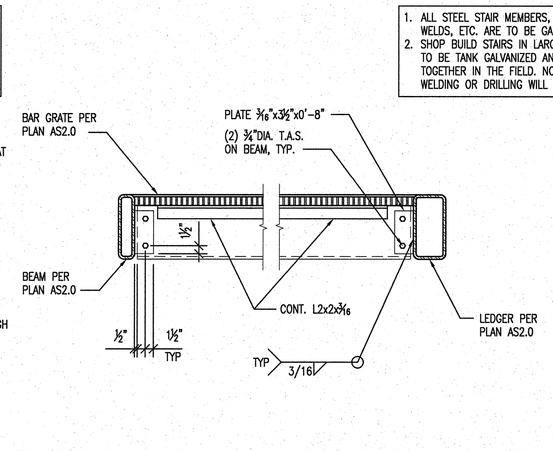

23 BEAM TO BEAM CONNECTIONS, TYP.
SCALE: NONE

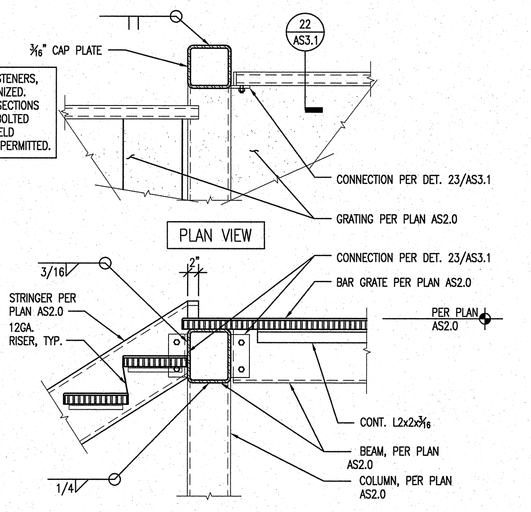

24 GRATED STEEL STAIR AND LANDING AT COLUMN
SCALE: NONE

100% SUBMITTAL

REVISIONS | DATE

CSHQA

C.W. MOORE PLAZA
250 S. 5TH ST. BOISE, ID 83702
(208) 343-4635 FAX (208) 343-1858
http://www.cshqa.com

AHJ ENGINEERS, PC
STRUCTURAL CONSULTANTS
5418 N. EAGLE RD. #140
BOISE, IDAHO 83713
(208) 323-0199
PROJECT # 11040.00
STRUCTURAL DETAILS AND CONCEPTS COPYRIGHT © OF AHJ ENGINEERS, P.C.

PROFESSIONAL ENGINEER REGISTERED 8487 STATE OF IDAHO 5/14 DAVID W. HAUGLAND

CAD FILE NAME: 531–319_AS3.1.dwg
XREF FILE NAME: 531–319_xa.42x30s.ttb.dwg 531–319_xa.struct.det.dwg

DRAWING TITLE: STRUCTURAL DETAILS

APPROVED: CHIEF OF FACILITY MANAGEMENT SERVICE
APPROVED: MEDICAL CENTER DIRECTOR

PROJECT TITLE: BOISE VAMC NEW EXTENDED CARE UNIT BUILDING 'A' CLC

BUILDING NUMBER: 121 | CHECKED: D.H. | DRAWN: G.V.

LOCATION: VAMC BOISE, IDAHO

DATE: 12/01/2011
PROJECT NO. 531–319
DRAWING NO. AS3.1
DWG 24 OF 58

DEPARTMENT OF VETERANS AFFAIRS

Username: gvondrak
May 14, 2012 – 9:25am
P:\11\11040-CSHQA VA CLC\02-Structural\BLDG-A\AS3.1.dwg, 30x42, 5142012 9:25:10 AM

NOTES:
1. SEE SHEAR WALL LAYOUT AT RIGHT.
2. ALL PANELS TO BE SURE-BOARD SERIES 200 STRUCTURAL PANELS CONSISTING OF 22 ga. SHEET STEEL BY CEMCO ADHERED TO ⅝" DENS-GLASS GOLD AT EXTERIOR WALLS AND ⅝" TYPE "X" GYPSUM BOARD AT INTERIOR WALLS.
3. WHERE NO MARK IS INDICATED USE ARCH'L. SPECIFIED PANELS W/ SCREWS PER ◇1 IN SCHEDULE.
4. STUDS SHALL BE PLACED AT 16" O.C. MAX.
5. FIELD FASTENING (F.F.) SHALL BE #8 SCREWS AT 12" O.C.
6. MINIMUM EDGE DISTANCE FOR SCREWS SHALL BE ⅜"
7. PANELS TO BE 4'-0" x 8'-0" UNLESS AT BOUNDARIES OR CHANGE IN FRAMING.
8. SCREW HEAD SHALL NOT BREAK OUTER SKIN OF SHEATHING.
9. BLOCK ALL PANEL EDGES W/ 600T162-43 BLKG.
10. ALL ANCHOR BOLTS (A.B.) TO HAVE PLATE 3x3x¼" WASHERS OVER TRACK AND NUTS TORQUED TO 125 FT-LBS.

SHEAR WALL SCHEDULE 1,2,3,4,5

MARK	SURE BOARD 200 PANELS		EDGE FASTENING (E.F.)	FDN. ANCHOR BOLTS
	NOMINAL PANEL THICKNESS	NUMBER OF SIDES	SCREW SIZE AND SPACING	SIZE AND SPACING
			ASTMC954 #8x1.25"	⅝"ø x 7" EMBED
◇1	⅝"	ONE SIDE	@ 6" O.C.	@ 48" O.C.
◇2	⅝"	ONE SIDE	@ 4" O.C.	@ 32" O.C.
◇3	⅝"	ONE SIDE	@ 3" O.C.	@ 24" O.C.
◇4	⅝"	ONE SIDE	@ 2" O.C.	@ 18" O.C.
◇5	⅝"	BOTH SIDES	@ 3" O.C.	@ 16" O.C.

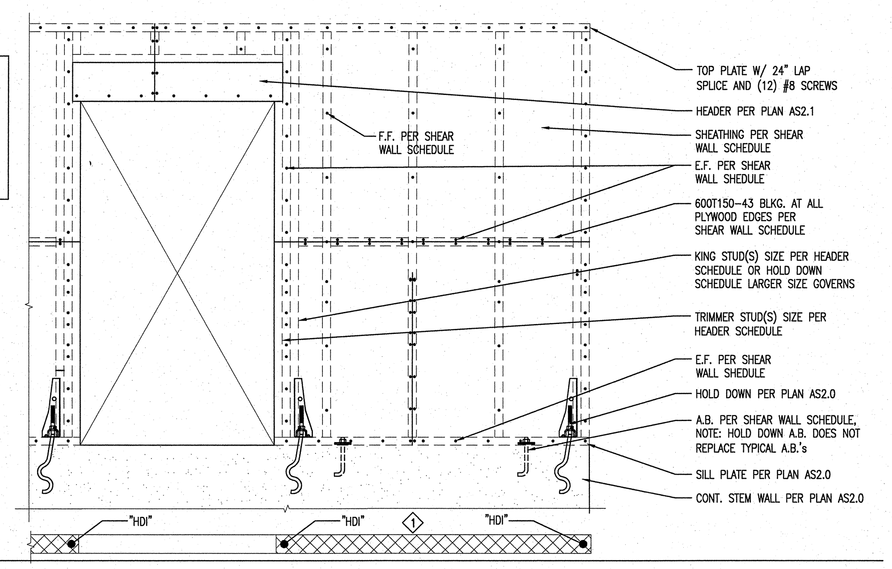

1 SHEAR WALL SCHEDULE
SCALE: NONE

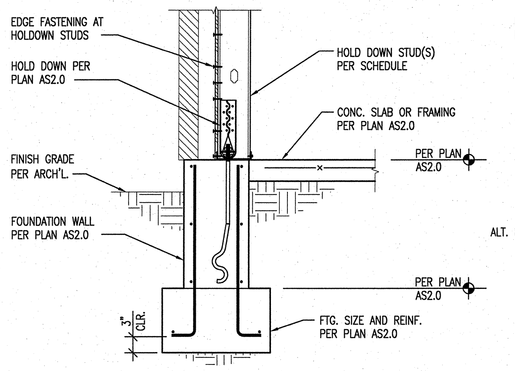

EXTERIOR WALL

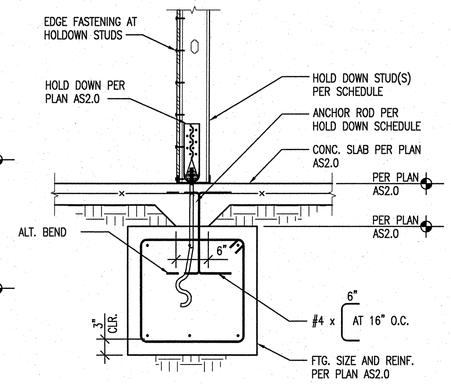

INTERIOR WALL

HOLD DOWN SCHEDULE

MARK	HOLD DOWN	HOLD DOWN STUD(S)	STUD SCREWS	ANCHOR BOLTS
HD1	SIMPSON S/HDU4	(2) 600S162-43 BACK TO BACK W/ (2) ROWS OF #10 SCREWS AT 24" O.C. AT WEBS	(6) #14	SIMPSON SSTB16
HD2	SIMPSON S/HDU8	(2)600S162-43 BACK TO BACK W/ (2) ROWS OF #10 SCREWS AT 16" O.C. AT WEBS	(12) #14	SIMPSON SSTB24
HD3	SIMPSON S/HDU9	(2)600S162-43 BACK TO BACK W/ (2) ROWS OF #10 SCREWS AT 12" O.C. AT WEBS	(18) #14	SIMPSON SSTB28

NOTE:
COMPARE HOLD DOWN STUD TO KING STUD REQ'D. PER HEADER SCHEDULE 5/AS3.1 LARGER SIZE GOVERNS.

4 HOLD DOWN SCHEDULE
SCALE: NONE

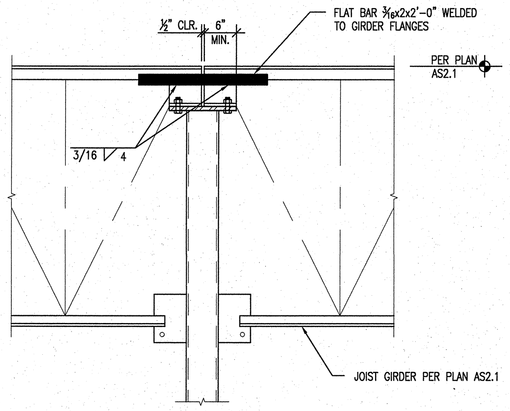

8 DRAG STRUT CONNECTOR AT GIRDERS
SCALE: NONE

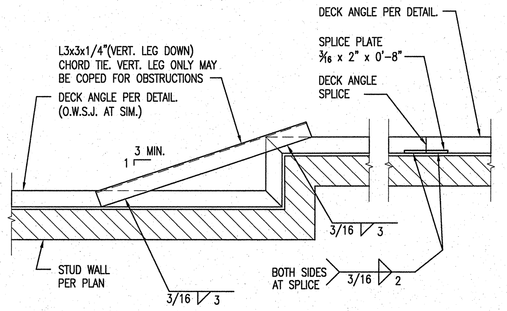

9 CHORD CONTINUITY TIES
SCALE: NONE

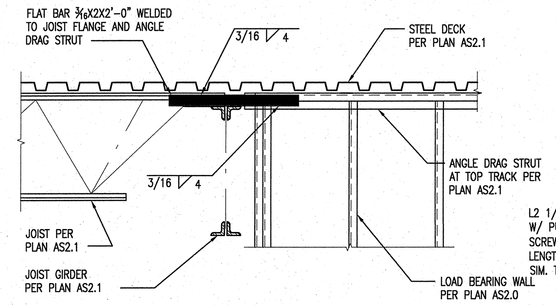

10 DRAG STRUT CONNECTION
SCALE: NONE

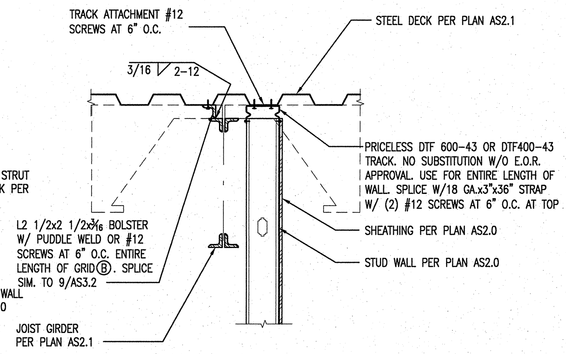

11 NON-LOAD BEARING SHEAR WALL AT STEEL DECK
SCALE: NONE

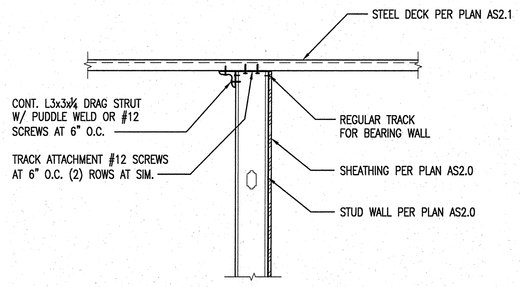

12 LOAD BEARING SHEAR WALL AT STEEL DECK
SCALE: NONE

100% SUBMITTAL

REVISIONS | DATE

CSHQA
C.W. MOORE PLAZA
250 S. 5TH ST. BOISE, ID 83702
(208) 343-4635 FAX (208) 343-1858
http://www.cshqa.com

AHJ ENGINEERS, PC
STRUCTURAL CONSULTANTS
5418 N. EAGLE RD. #140
BOISE, IDAHO 83713
(208) 323-0199
PROJECT # 11040.00
STRUCTURAL DETAILS AND CONCEPTS
COPYRIGHT © OF AHJ ENGINEERS, P.C.

PROFESSIONAL ENGINEER REGISTERED 8454 STATE OF IDAHO DAVID W. HAUGLAND 6/14/12

CAD FILE NAME: 531-319_AS3.2.dwg
XREF FILE NAME: 531-319_xa.42x30s.ttb.dwg
531-319_xa.struct.det.dwg

DRAWING TITLE: STRUCTURAL DETAILS
APPROVED: CHIEF OF FACILITY MANAGEMENT SERVICE
APPROVED: MEDICAL CENTER DIRECTOR

PROJECT TITLE: BOISE VAMC NEW EXTENDED CARE UNIT BUILDING 'A' CLC
BUILDING NUMBER: 121 | CHECKED: D.H. | DRAWN: G.V.
LOCATION: VAMC BOISE, IDAHO

DATE: 12/01/2011
PROJECT NO. 531-319
DRAWING NO. AS3.2
DWG 25 OF 58

DEPARTMENT OF VETERANS AFFAIRS

P:\11\11040-CSHQA VA CLC\02-Structural\BLDG-A\AS3.2.dwg, 30x42, 6/14/2012 8:26:49 AM
Username: gvandrak
May 14, 2012 - 9:26am
P:\11\11040-CSHQA VA CLC\02-Structural\BLDG-A\AS3.2.dwg

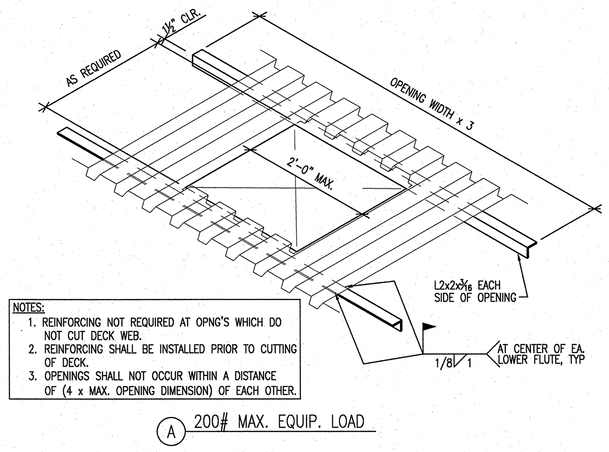

1 TYPICAL REINFORCEMENT OF STEEL DECK FOR MECHANICAL UNIT OPENINGS
SCALE: NONE

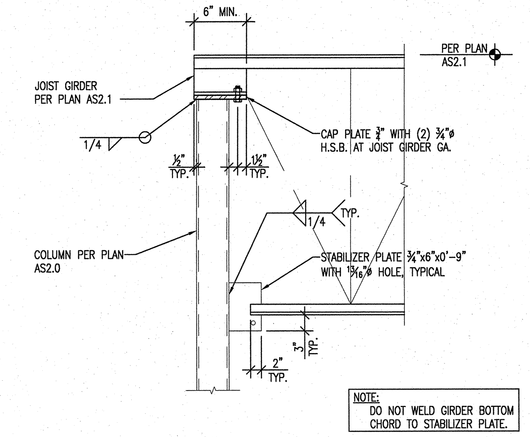

4 JOIST GIRDER TO HSS COLUMN
SCALE: NONE

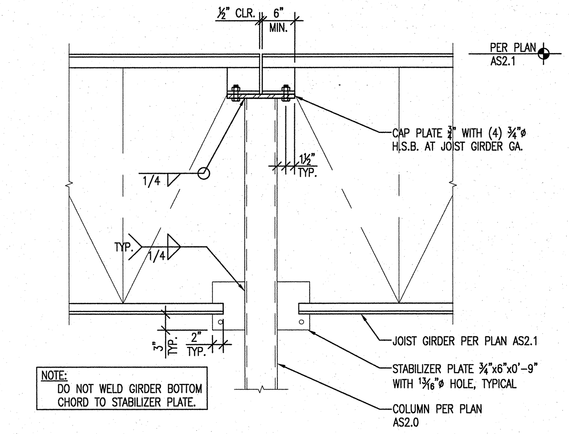

5 JOIST GIRDER TO HSS COLUMN
SCALE: NONE

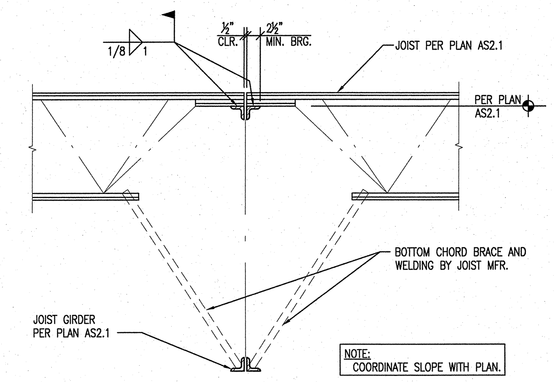

6 JOIST TO GIRDER ("K" SERIES)
SCALE: NONE

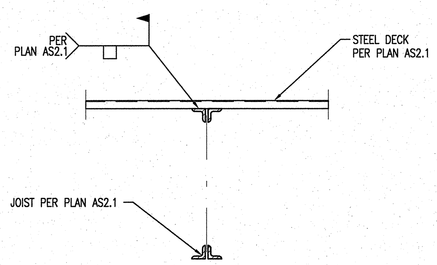

7 STEEL DECK OVER OPEN WEB STEEL JOIST
SCALE: NONE

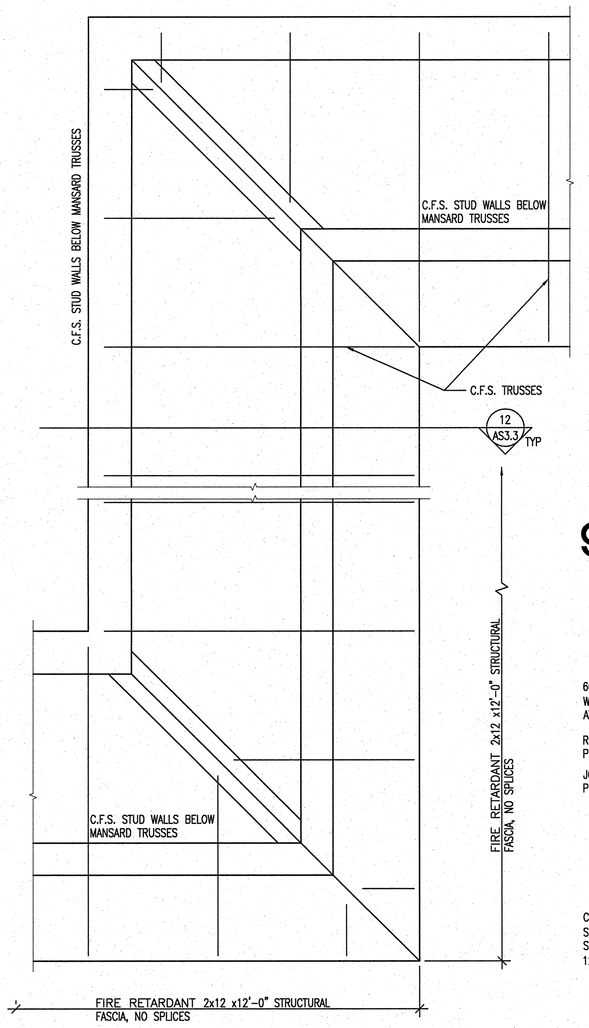

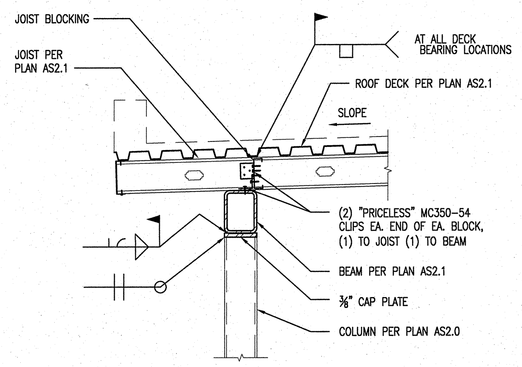

9 CANOPY FRAMING
SCALE: NONE

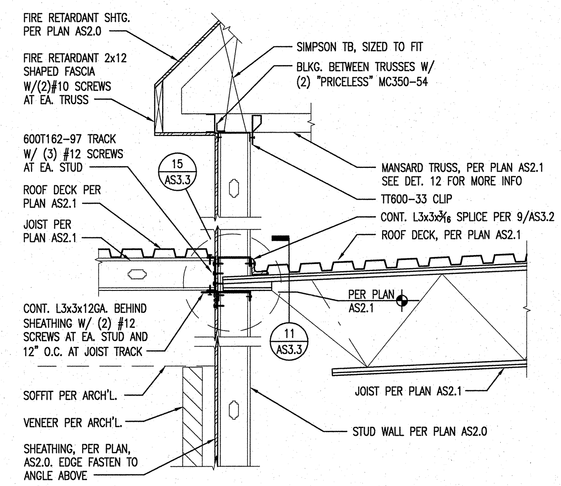

10 ROOF FRAMING AT CANOPY
SCALE: NONE

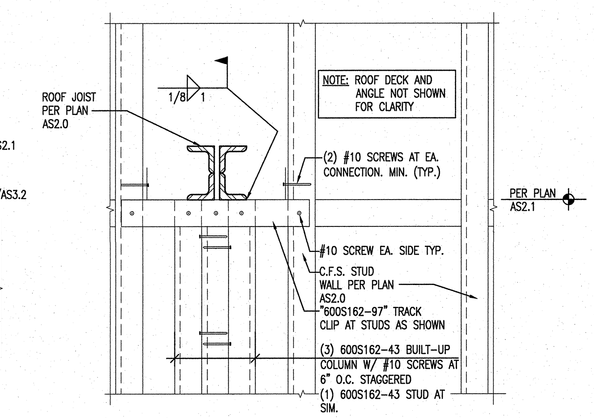

11 ELEVATION OF ROOF JOIST AT C.F.S. STUD BUILT-UP COLUMN
SCALE: NONE

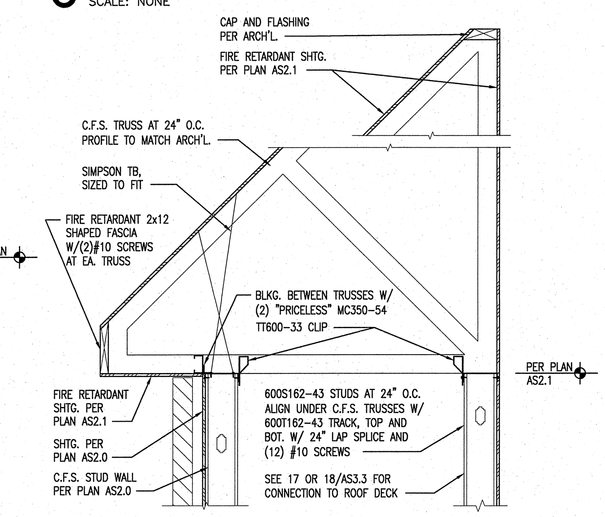

12 ROOF EDGE / MANSARD FRAMING
SCALE: NONE

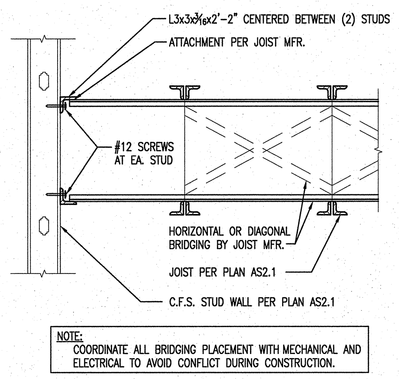

13 TYP. JOIST BRIDGING TO C.F.S. STUD

14 MANSARD ROOF AT CORNERS
SCALE: NONE

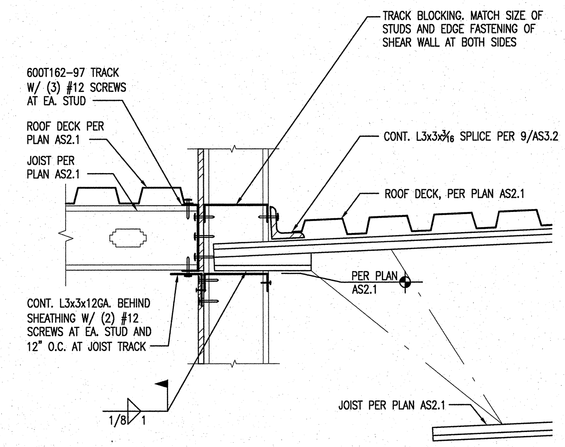

15 ROOF TO WALL SHEAR TRANSFER
SCALE: NONE

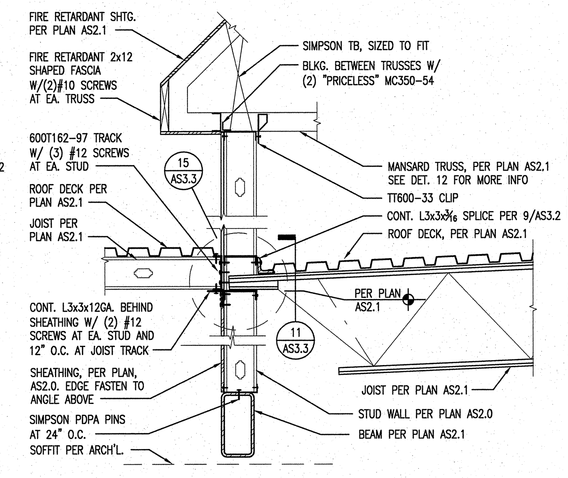

16 ROOF FRAMING AT CANOPY
SCALE: NONE

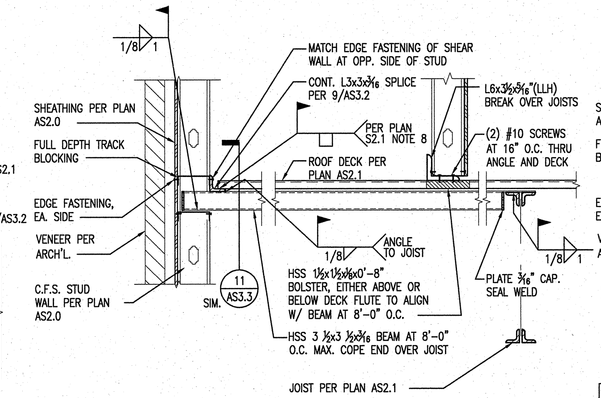

17 ROOF EDGE / MANSARD FRAMING AT PARALLEL JOISTS
SCALE: NONE

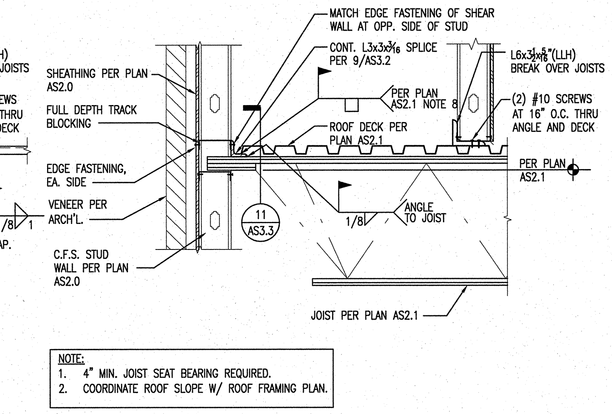

18 ROOF EDGE / MANSARD FRAMING AT PERPENDICULAR JOISTS
SCALE: NONE

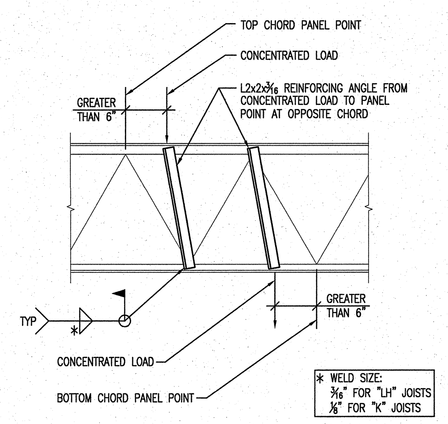

19 STEEL JOIST REINF. WHERE CONCENTRATED LOADS EXCEED 150 LBS. BETWEEN PANEL POINTS
SCALE: NONE

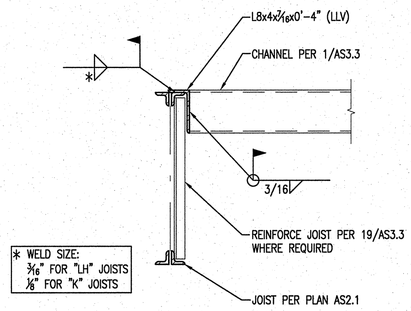

20 MECHANICAL UNIT SUPPORT FRAMING
SCALE: NONE

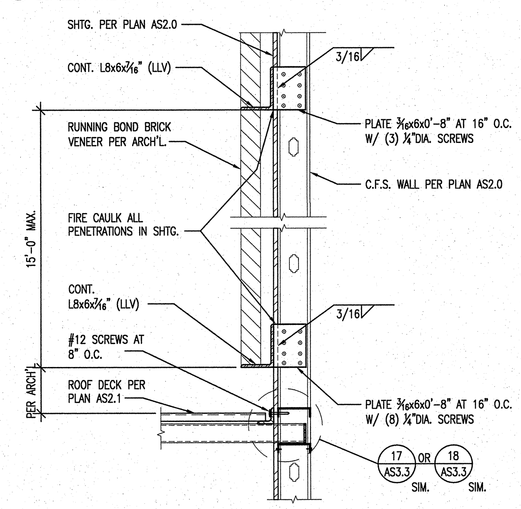

22 TYP. VENEER SUPPORT
SCALE: NONE

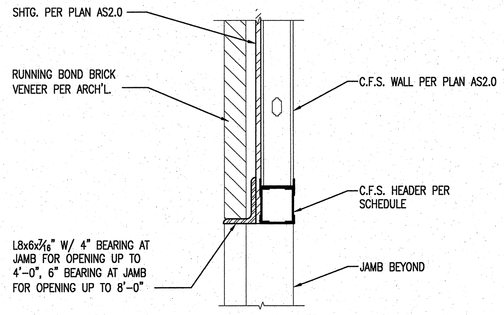

23 TYPICAL VENEER LINTEL AT C.F.S. STUD WALL
SCALE: NONE

100% SUBMITTAL

REVISIONS | DATE

CSHQA

C.W. MOORE PLAZA
250 S. 5TH ST. BOISE, ID 83702
(208) 343-4635 FAX (208) 343-1858
http://www.cshqa.com

AHJ ENGINEERS, PC
STRUCTURAL CONSULTANTS
5418 N. EAGLE RD. #140
BOISE, IDAHO 83713
(208) 323-0199
PROJECT # 11040.00
STRUCTURAL DETAILS AND CONCEPTS
COPYRIGHT © OF AHJ ENGINEERS, P.C.

PROFESSIONAL ENGINEER REGISTERED 8454 STATE OF IDAHO 9/14/12 DAVID W. HAUBLAND

CAD FILE NAME: 531-319_AS3.3.dwg
XREF FILE NAME: 531-319_xa.42x30s.ttb.dwg 531-319_xa.struct.det.dwg

DRAWING TITLE: STRUCTURAL DETAILS

APPROVED: CHIEF OF FACILITY MANAGEMENT SERVICE

APPROVED: MEDICAL CENTER DIRECTOR

PROJECT TITLE: BOISE VAMC NEW EXTENDED CARE UNIT BUILDING 'A' CLC

BUILDING NUMBER: 121 | CHECKED: D.H. | DRAWN: G.V.

LOCATION: VAMC BOISE, IDAHO

DATE: 12/01/2011
PROJECT NO. 531-319
DRAWING NO. AS3.3
DWG 26 OF 58

DEPARTMENT OF VETERANS AFFAIRS

Username: gvandrak
May 14, 2012 - 9:28am
P:\11\11040-CSHQA VA CLC\02-Structural\BLDG-A\AS3.3.dwg, 30x42, 5/14/2012 9:28:09 AM