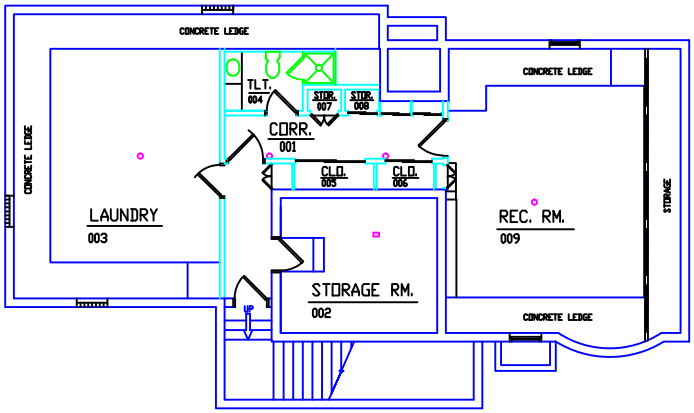

BLDG. #15

NORTH

BASEMENT FLOOR PLAN

SCALE: 1/8" = 1'- 0"

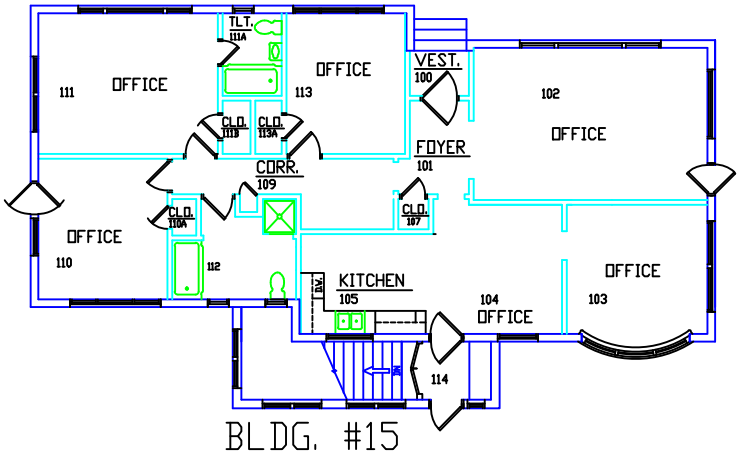

BLDG. #15

NORTH

FIRST FLOOR PLAN

SCALE: 1/8" = 1'-0"

Revisions	Date

Drawing Title

Approved: Division Chief

Approved: Service Director

Project Title

Building Number | Checked | Drawn

Location
VAMROC SIOUX FALLS, SOUTH DAKOTA

Date

Project No.

Drawing No.

Dwg. of

Office of Facilities

Department of Veterans Affairs