DOOR SCHEDULE

DOOR SCHEDULE

Level	OPENING			RTG	OPENING SIZE		DOOR			GL TYPE	FRAME						HDWR	REMARKS	HARDWARE KEYS								
	RM NUM	TAG	RM NAME		WIDTH	HEIGHT	TYPE	MTL	FIN		TYPE	MTL	FIN	JAMB	HEAD	SILL			1	2	3	4	5	6	7	8	9
LEVEL 1	100	HW100B	HALLWAY	NR	3' - 6"	7' - 0"	FG-1	AL			A															X	
LEVEL 1	100	HW100A	HALLWAY	NR	3' - 6"	7' - 0"	FG-1	AL			A															X	
LEVEL 1	100	HW100C	HALLWAY	NR	8' - 7"	7' - 0"	SG	GL											X					X			
LEVEL 1	1B-101	101	BED ROOM	NR	4' - 0"	7' - 0"	N1	WD			A			F4/AS-602	F2/AS-602		01										
LEVEL 1	1B-101A	101A	LITTER SHWR	NR	4' - 0"	7' - 0"	FG	GL			--			E2/AS-602	F1/AS-602		02		X								X
LEVEL 1	1B-102	102	BED ROOM	NR	4' - 0"	7' - 0"	N1	WD			A			F4/AS-602	F2/AS-602		01										
LEVEL 1	1B-102A	102A	LITTER SHWR	NR	4' - 0"	7' - 0"	FG	GL			--			E2/AS-602	F1/AS-602		02		X								X
LEVEL 1	1B-103	103	BED ROOM	NR	4' - 0"	7' - 0"	N1	WD			A			F4/AS-602	F2/AS-602		01										
LEVEL 1	1B-103A	103A	LITTER SHWR	NR	4' - 0"	7' - 0"	FG	GL			--			E2/AS-602	F1/AS-602		02		X								X
LEVEL 1	1B-104	104	BED ROOM	NR	4' - 0"	7' - 0"	N1	WD			A			F4/AS-602	F2/AS-602		01										
LEVEL 1	1B-104A	104A	LITTER SHWR	NR	4' - 0"	7' - 0"	FG	GL			--			E2/AS-602	F1/AS-602		02		X								X
LEVEL 1	1B-105	105	BED ROOM	NR	4' - 0"	7' - 0"	N1	WD			A			F4/AS-602	F2/AS-602		01										
LEVEL 1	1B-105A	105A	LITTER SHWR	NR	4' - 0"	7' - 0"	FG	GL			--			E2/AS-602	F1/AS-602		02		X								X
LEVEL 1	1B-106	106	BED ROOM	NR	4' - 0"	7' - 0"	N1	WD			A			F4/AS-602	F2/AS-602		01										
LEVEL 1	1B-106A	106A	LITTER SHWR	NR	4' - 0"	7' - 0"	FG	GL			--			E2/AS-602	F1/AS-602		02		X								X
LEVEL 1	1B-107	107	TELE CONFERENCE ROOM	20MIN	3' - 0"	7' - 0"	F	WD			A			F4/AS-602	F2/AS-602		05										
LEVEL 1	1B-108	108	CONSULTATION ROOM	20MIN	3' - 0"	7' - 0"	F	WD			A			F4/AS-602	F2/AS-602		06										
LEVEL 1	1B-109	109	CONSULTATION ROOM	20MIN	3' - 0"	7' - 0"	F	WD			A			F4/AS-602	F2/AS-602		06										
LEVEL 1	1B-110	110	STORAGE	20MIN	6' - 0"	7' - 0"	F2	WD			B			F4/AS-602	F2/AS-602		07										
LEVEL 1	1B-111	111	MECHANICAL	20MIN	3' - 0"	7' - 0"	F	WD			A			F4/AS-602	F2/AS-602		08										
LEVEL 1	1B-112	112	BED ROOM	NR	4' - 0"	7' - 0"	N1	WD			A			F4/AS-602	F2/AS-602		01										
LEVEL 1	1B-112A	112A	LITTER SHWR	NR	4' - 0"	7' - 0"	FG	GL			--			E2/AS-602	F1/AS-602		02		X								X
LEVEL 1	1B-113	113	EMS	20MIN	3' - 0"	7' - 0"	F	WD			A			F4/AS-602	F2/AS-602		09										
LEVEL 1	1B-114	114	WASHER AND DRYER	NR	4' - 0"	7' - 0"	N	WD			A			F4/AS-602	F2/AS-602		03										
LEVEL 1	1B-115	115	CONFERENCE ROOM	NR	3' - 0"	7' - 0"	F	WD			A			F4/AS-602	F2/AS-602		05										
LEVEL 1	1B-117	117	BED ROOM	NR	4' - 0"	7' - 0"	N1	WD			A			F4/AS-602	F2/AS-602		01										
LEVEL 1	1B-117B	117B	LITTER SHWR	NR	4' - 0"	7' - 0"	FG	GL			--			E2/AS-602	F1/AS-602		02		X								X
LEVEL 1	1B-119	119	BED ROOM	NR	4' - 0"	7' - 0"	N1	WD			A			F4/AS-602	F2/AS-602		01										
LEVEL 1	1B-119A	119A	LITTER SWHR	NR	4' - 0"	7' - 0"	FG	GL			--			E2/AS-602	F1/AS-602		02		X								X
LEVEL 1	1B-121	121	ELECTRICAL	NR	3' - 0"	7' - 0"	F	WD			A			F4/AS-602	F2/AS-602		10										
LEVEL 1	1B-122	122	BED ROOM	NR	4' - 0"	7' - 0"	N1	WD			A			F4/AS-602	F2/AS-602		01										
LEVEL 1	1B-122A	122A	LITTER SHWR	NR	4' - 0"	7' - 0"	FG	GL			--			E2/AS-602	F1/AS-602		02		X								X
LEVEL 1	1B-124	124	NURSE SUPERVISOR	NR	3' - 0"	7' - 0"	N	WD			A			F4/AS-602	F2/AS-602		14										
LEVEL 1	1B-125	125	MEDICATION ROOM	NR	3' - 0"	7' - 0"	N	WD			A			F4/AS-602	F2/AS-602		14										
LEVEL 1	1B-126	126	SPS ROOM	NR	3' - 0"	7' - 0"	N	WD			A			F4/AS-602	F2/AS-602		13										
LEVEL 1	1B-127	127	CLEAN LINEN	45MIN	3' - 0"	7' - 0"	F	WD			A			F4/AS-602	F2/AS-602		12										
LEVEL 1	1B-128	128	BED ROOM	NR	4' - 0"	7' - 0"	N1	WD			A			F4/AS-602	F2/AS-602		01										
LEVEL 1	1B-128A	128A	LITTER SHWR	NR	4' - 0"	7' - 0"	FG	GL			--			E2/AS-602	F1/AS-602		02		X								X
LEVEL 1	1B-129	129	BED ROOM	NR	4' - 0"	7' - 0"	N1	WD			A			F4/AS-602	F2/AS-602		01										
LEVEL 1	1B-129A	129A	LITTER SHWR	NR	4' - 0"	7' - 0"	FG	GL			--			E2/AS-602	F1/AS-602		02		X								X
LEVEL 1	1B-130	130	SOILED LINEN	45MIN	3' - 0"	7' - 0"	F	WD			A			F4/AS-602	F2/AS-602		11										
LEVEL 1	1B-132	132	STAFF TOILET	NR	3' - 0"	7' - 0"	F	WD			A			F4/AS-602	F2/AS-602		15										
LEVEL 1	1B-133	133	QUIET ROOM	NR	3' - 0"	7' - 0"	N	WD			A			F4/AS-602	F2/AS-602		14										
LEVEL 1	1B-134	134	CONSULTATION ROOM#2	20MIN	3' - 0"	7' - 0"	F	WD			A			F4/AS-602	F2/AS-602		06										
LEVEL 1	1B-135	135	ELEC.	NR	3' - 0"	7' - 0"	F	WD			A			F4/AS-602	F2/AS-602		09										
LEVEL 1	1B-136	136	CLEAN UTILITY	NR	3' - 0"	7' - 0"	N	WD			A			F4/AS-602	F2/AS-602		10										
LEVEL 1	1B-137	137	STAFF BREAK ROOM	NR	3' - 0"	7' - 0"	N	WD			A			F4/AS-602	F2/AS-602		05										
LEVEL 1	1B-138	138	STORAGE	NR	3' - 0"	7' - 0"	F	WD			A			F4/AS-602	F2/AS-602		16										
LEVEL 1	1B-139	139	OXYGEN STORAGE	45MIN	3' - 0"	7' - 0"	F	WD			A			F4/AS-602	F2/AS-602		12										
LEVEL 1	1B-140	140	STAFF LOCKER ROOM	NR	3' - 0"	7' - 0"	F	WD			A			F4/AS-602	F2/AS-602		05										
LEVEL 1	C1-6	C1-2	CORR	20MIN	7' - 0"	7' - 0"	N2	WD			B			F4/AS-602	F2/AS-602		04		X	X							
LEVEL 1	C1-7	C1-7B	CORRIDOR	20MIN	7' - 0"	7' - 0"	N2	WD			B			F4/AS-602	F2/AS-602		04		X	X							

DOOR HARDWARE KEYS

KEY NAME	DESCRIPTION
1	DOOR OPERATOR
2	CARD READER
3	ENTRANCE LOCK
4	PASSAGE LOCK
5	STOREROOM LOCK
6	EXIT DEVICE
7	FULLY GASKETED
8	DOOR CLOSER
9	PUSH BUTTON
10	
11	
12	
13	

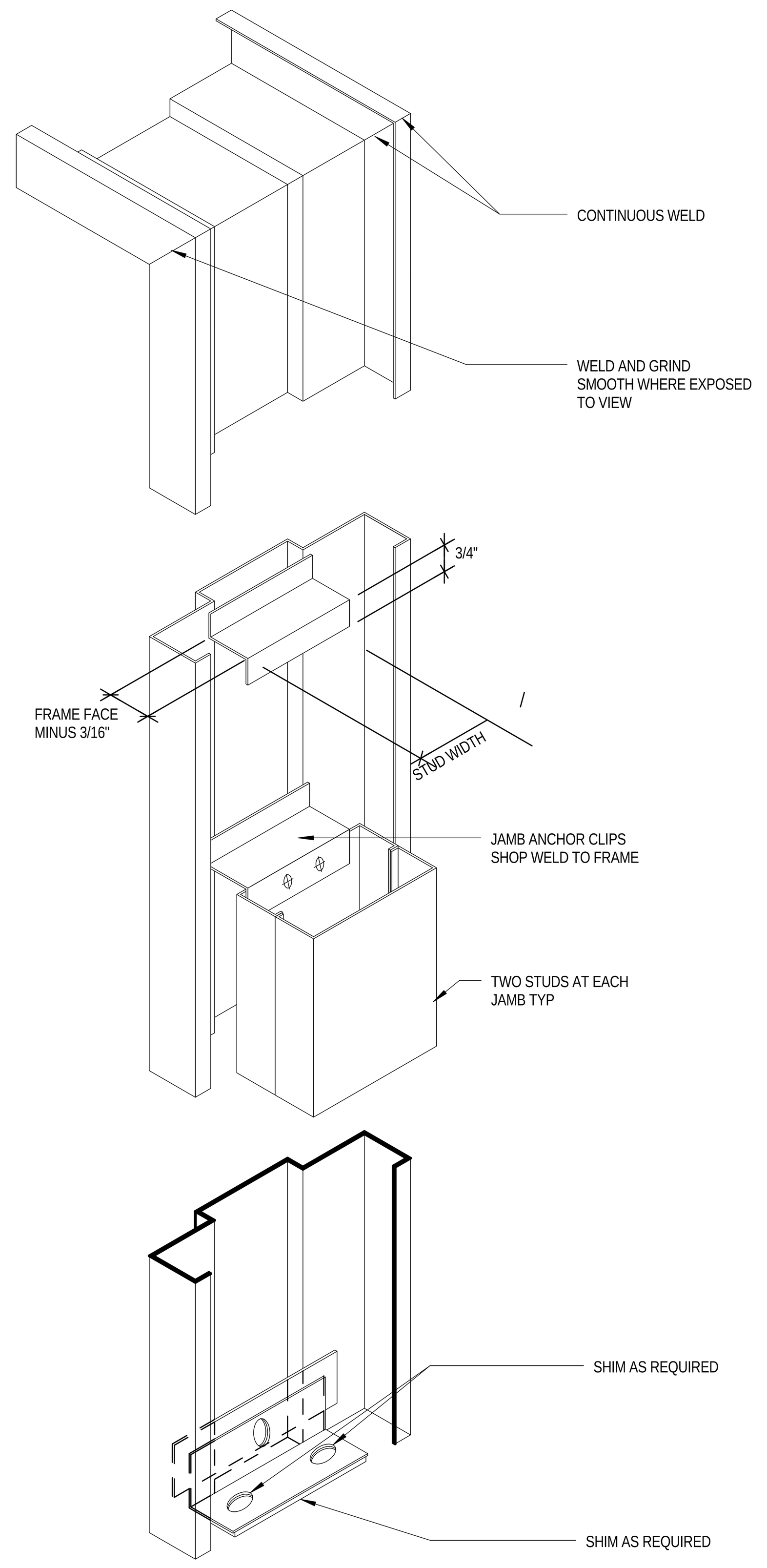

C1 FRAME ANCHOR
3" = 1'-0"

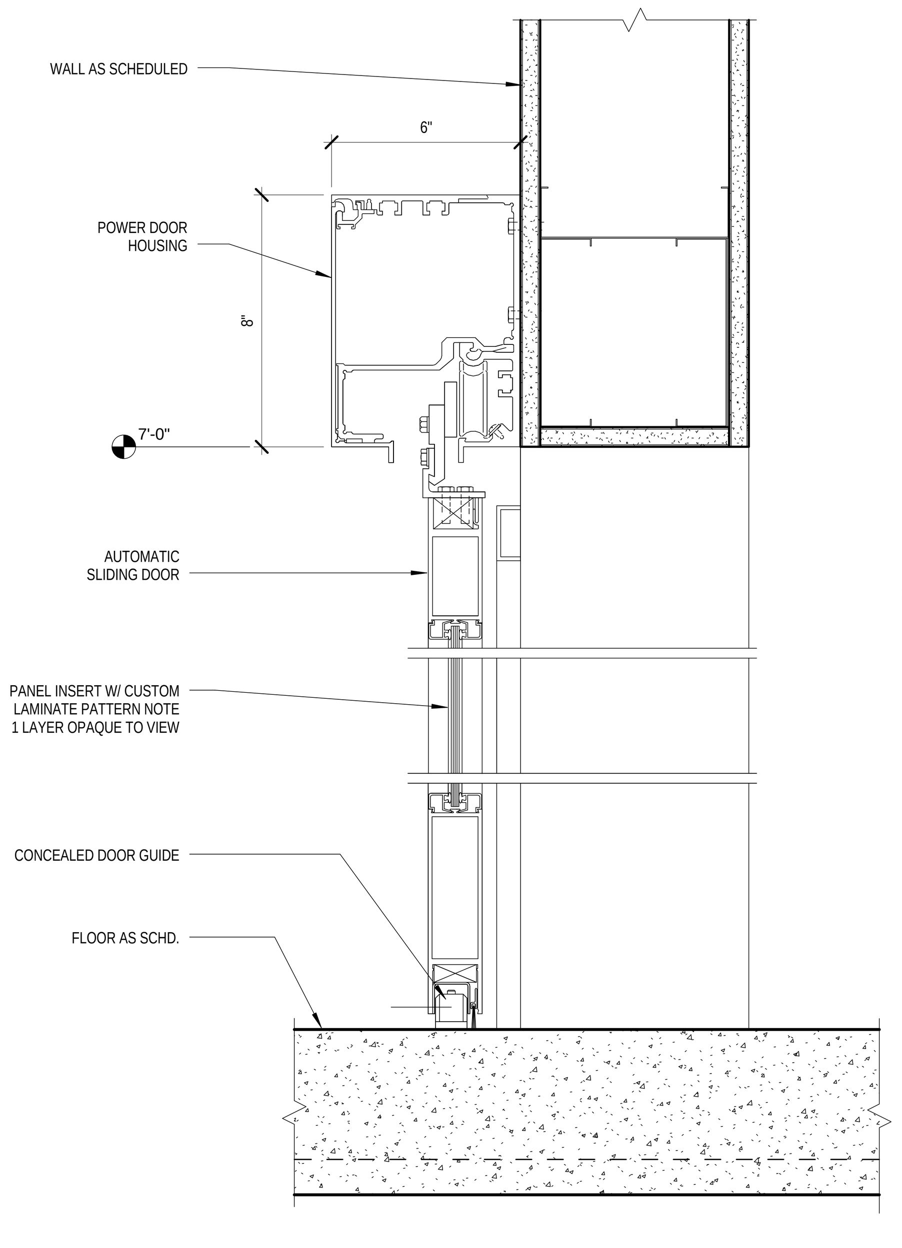

F1 LITTER TOILET HEAD DETAIL
3" = 1'-0"

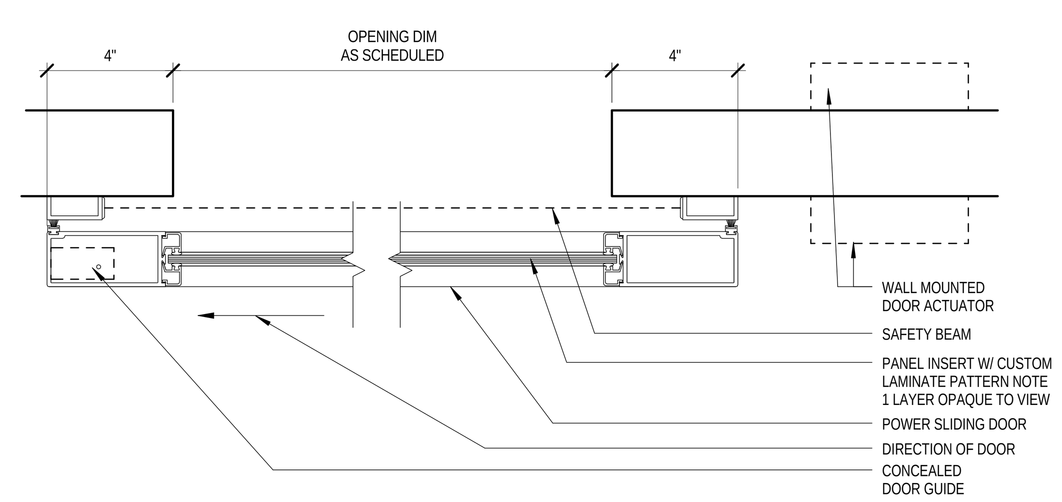

E2 LITTER TOILET DOOR JAMB
3" = 1'-0"

NOTE:
PROVIDE ANCHORS AT HEAD AT 2'-0" O.C. MIN. WHEN FRAME FOR PAIR OF DOORS IS GREATER THAN 5'-0".

NOTE:
PROVIDE MFR'S RECOMMENDED HEAD REINFORCING FOR DOORS OVER 3' - 0" WIDE. PROVIDE MINIMUM DOUBLE CHANNEL.

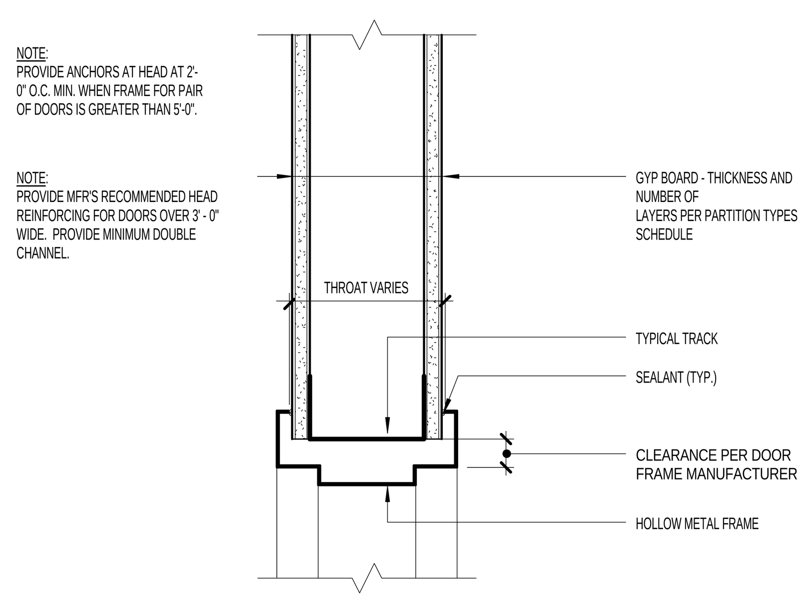

F2 TYPICAL DOOR HEAD DETAIL (INTERIOR)
3" = 1'-0"

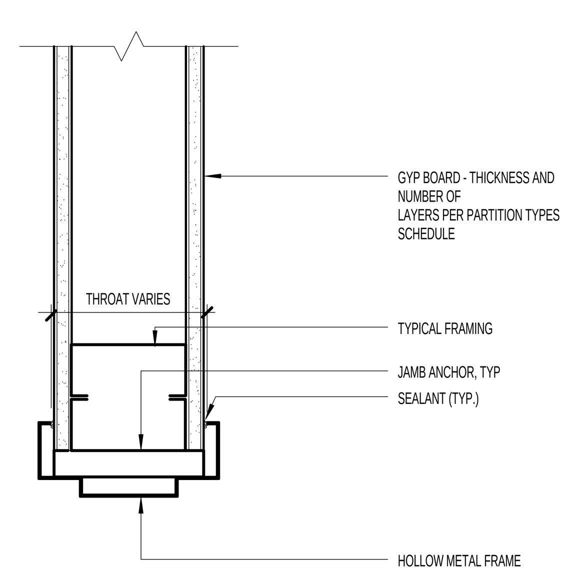

F4 TYPICAL DOOR JAMB DETAIL (INT.)
3" = 1'-0"

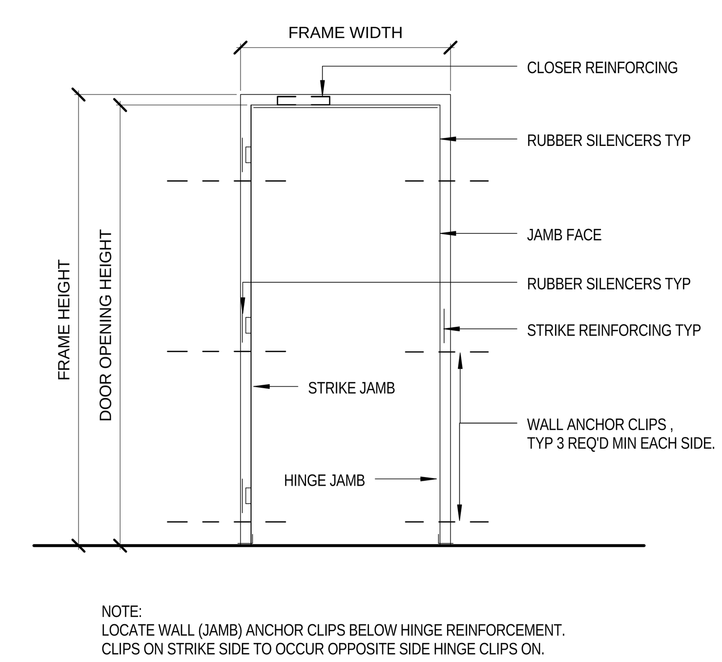

NOTE:
LOCATE WALL (JAMB) ANCHOR CLIPS BELOW HINGE REINFORCEMENT.
CLIPS ON STRIKE SIDE TO OCCUR OPPOSITE SIDE HINGE CLIPS ON.

F5 TYPICAL DOOR FRAME
3" = 1'-0"

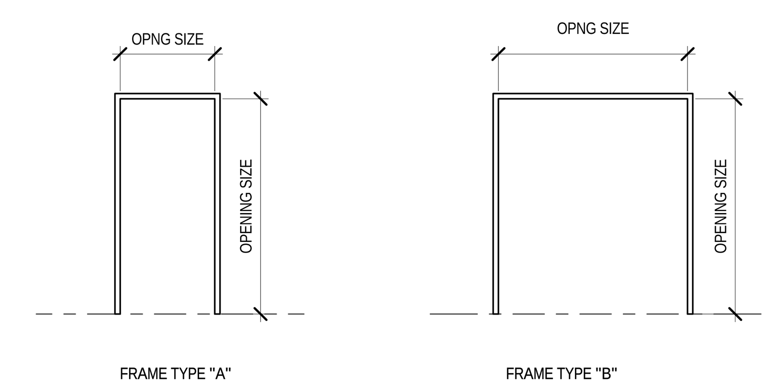

E7 DOOR FRAME TYPES
1/4" = 1'-0"

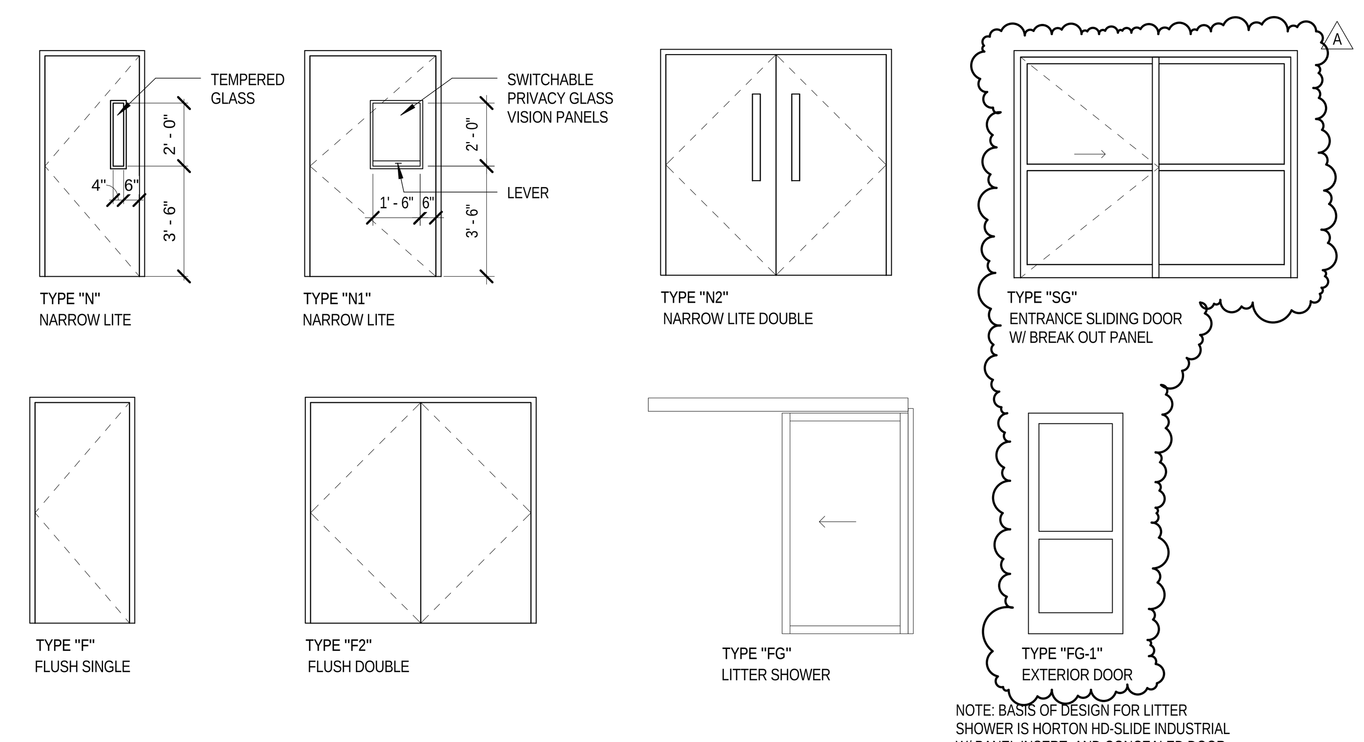

NOTE: BASIS OF DESIGN FOR LITTER SHOWER IS HORTON HD-SLIDE INDUSTRIAL W/ PANEL INSERT, AND CONCEALED DOOR GUIDE. NO DOOR TRACKS ARE ALLOWED AT THE LITTER SHOWER THRESHOLD.

F7 DOOR TYPES
1/4" = 1'-0"

#	Revision	Date
A	Bid RFI Addendum	05/01/2013

CONSULTANTS:

COST ESTIMATE
CUMMING
660 S. Figueroa St., Suite 900
Los Angeles, CA 90017
t 213.417.2360
f 213.408.4665

MEP ENGINEER
Glumac
617 West 7th St., Suite 500
Los Angeles, CA 90017
t 213.239.8866
f 213.239.8816

STRUCTURAL
Saiful - Bouquet
155 N. Lake Ave, Suite 600
Pasadena, CA 91101
t 626.304.2616
f 626.304.2676

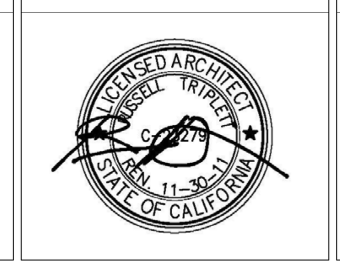

ARCHITECT/ENGINEERS:

ARCHITECT
Perkins+Will
617 West 7th St., Suite 1200
Los Angeles, CA 90017
t 213.270.8400
f 213.270.8410

PERKINS +WILL

Drawing Title
DOOR SCHEDULE & DETAILS

Approved: Project Director
Approver

Project Title
VETERANS AFFAIRS
LONG TERM CARE CONVERSION
SCI BUILDING 150

Location
LONG BEACH, CALIFORNIA

Date: FEBRUARY 22, 2013 | Checked: Checker | Drawn: Author

Project Number
600-12-138
(PW#712016.000)

Building Number
–

Drawing Number
AS-602

Dwg of

Office of Construction and Facilities Management

Department of Veterans Affairs

100% FINAL CONSTRUCTION DOCUMENTS
FULLY SPRINKLERED BUILDING

c:\temp\ARCH_VA_LTCU VA_lesacaj.rvt
5/2/2013 6:38:48 PM

VA FORM 08-6231