VA ADMINISTRATION BUILDING

PRIVATE OFFICE (C-1 A)

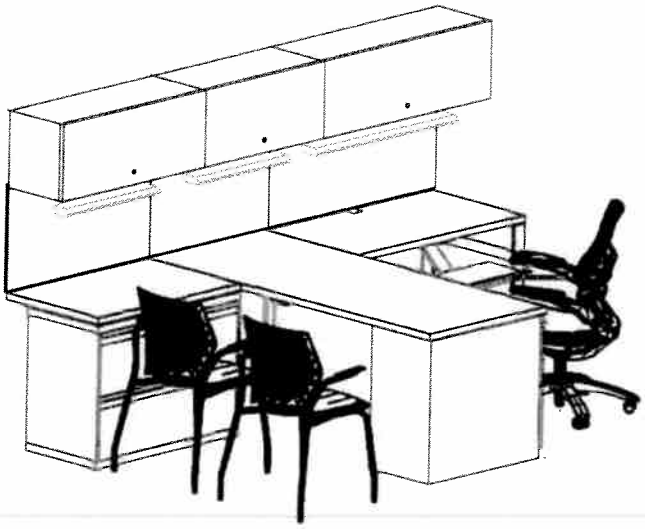

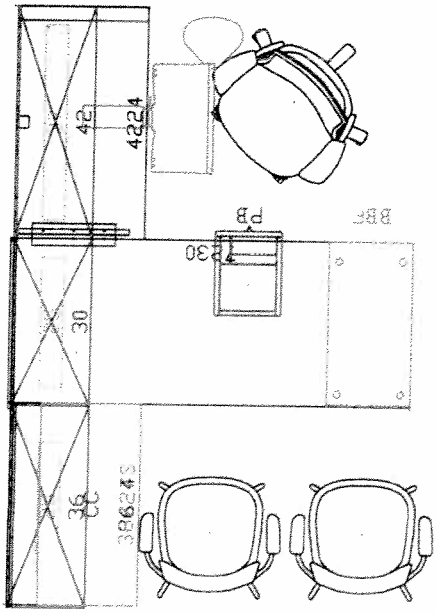

VA Administration Building

PRIVATE OFFICE C-1A

Item	Preview	Mfg	Part Number	Part Description	Qty
1		KNO	AWM1S48	Stiffener for Worksurface 32W, for 48"or 54"application	1
2		KNO	AWM1S66	Stiffener for Worksurface 50W, for 66" application	1
3		KNO	D1R3624N	Worksurface, Rectangular, 36Wx24D, no grommet	1
			(CORE)	Core Laminates	
			125	LAM: Natural Maple	
			(CORE)	Core Edgebands	
			125	EDGE: Natural Maple	
4		KNO	D1R4224G	Worksurface, Rectangular, 42Wx24D, with grommet	1
			(CORE)	Core Laminates	
			125	LAM: Natural Maple	
			(CORE)	Core Edgebands	
			125	EDGE: Natural Maple	
5		KNO	D1R7230N	Worksurface, Rectangular, 72Wx30D, no grommet	1
			(CORE)	Core Laminates	
			125	LAM: Natural Maple	
			(CORE)	Core Edgebands	
			125	EDGE: Natural Maple	
6		KNO	DB1LS24A	A Leg Support, 24D	1
			(CORE)	Core Paints	
			117T	PAINT: Soft Grey (Textured)	

VA Administration Building

PRIVATE OFFICE C-1A

Item	Preview	Mfg	Part Number	Part Description	Qty
7		KNO	DL3T5E25S	T5 Task Light, Standard, 25"W for use with 30" and wider Overhead	2
			~	*** No Selection ***	
8		KNO	DL3T5E37S	T5 Task Light, Standard, 37"W for use with 42" and wider Overhead	1
			~	*** No Selection ***	
9		KNO	DS1WM30	Overhead Wall Mount Bracket, 30W	1
			117T	PAINT: Soft Grey (Textured)	
10		KNO	DS1WM36	Overhead Wall Mount Bracket, 36W	1
			117T	PAINT: Soft Grey (Textured)	
11		KNO	DS1WM42	Overhead Wall Mount Bracket, 42W	1
			117T	PAINT: Soft Grey (Textured)	
12		KNO	DS2PFL30A	Floorstanding Pedestal, Series 2 steel front, Box/Box/File, 29-1/4D, with lock, Series 2 pull	1
			(CORE TX)	Textured Core Paints	
			117T	PAINT: Soft Grey (Textured)	
			(RANDOM)	LOCK: Randomly Keyed	
13		KNO	DS2PM30L	Overhead Cabinet, Series 2 steel or veneer front, 29-7/8W, Panel Mounted, with lock	1
			(STEEL)	Steel Door	
			(CORE)	Core Paints	
			117T	PAINT: Soft Grey (Textured)	
			117T	DOOR: Soft Grey (Textured)	
			(KEYALIKE)	LOCK: Keyed Alike	
			~	Spec lock core & key separate	

VA Administration Building

PRIVATE OFFICE C-1A

Item	Preview	Mfg	Part Number	Part Description	Qty
14		KNO	DS2PM36L	Overhead Cabinet, Series 2 steel or veneer front, 35-7/8W, Panel Mounted, with lock	1
			(STEEL)	Steel Door	
			(CORE)	Core Paints	
			117T	PAINT: Soft Grey (Textured)	
			117T	DOOR: Soft Grey (Textured)	
			(KEYALIKE)	LOCK: Keyed Alike	
			~	Spec lock core & key separate	
15		KNO	DS2PM42L	Overhead Cabinet, Series 2 steel or veneer front, 41-7/8W, Panel Mounted, with lock	1
			(STEEL)	Steel Door	
			(CORE)	Core Paints	
			117T	PAINT: Soft Grey (Textured)	
			117T	DOOR: Soft Grey (Textured)	
			(KEYALIKE)	LOCK: Keyed Alike	
			~	Spec lock core & key separate	
16		KNO	F-30-20	Universal Fabric Board, 30Wx20H	1
			S1	OPT: Squ Corner/Rect Edge	
			A	OPT: 1/2" Mineral Board	
			30	OPT: Fabric Group (F30)	
			(TBA30)	FABRIC: TBA	
			FWMR20	OPT: 1/2" Reveal Wall-Mount	

VA Administration Building

PRIVATE OFFICE C-1A

Item	Preview	Mfg	Part Number	Part Description	Qty
17		KNO	F-36-20	Universal Fabric Board, 36Wx20H	1
			S1	OPT: Squ Corner/Rect Edge	
			A	OPT: 1/2" Mineral Board	
			30	OPT: Fabric Group (F30)	
			(TBA30)	FABRIC: TBA	
			FWMR20	OPT: 1/2" Reveal Wall-Mount	
18		KNO	F-42-20	Universal Fabric Board, 42Wx20H	1
			S1	OPT: Squ Corner/Rect Edge	
			A	OPT: 1/2" Mineral Board	
			30	OPT: Fabric Group (F30)	
			(TBA30)	FABRIC: TBA	
			FWMR20	OPT: 1/2" Reveal Wall-Mount	
19		KNO	OAKA2P1SL2BK	Act II Keyboard Platform, with Short Easy Lift Arm, Phenolic	1
			22	TRACK: 21-5/8"	
20		KNO	C2F2736CCC	Calibre Lateral File, 2-12" drawers with rails, 36Wx27H, with lock	1
			(CORE TX)	Textured Core Paints	
			117T	PAINT: Soft Grey tx	
			(RANDOM)	LOCK: Randomly Keyed	
21		KNO	EB1C20L	Cantilever, Left Hand, 20"	1
			(BLACK)	Black	

VA Administration Building

PRIVATE OFFICE C-1A

Item	Preview	Mfg	Part Number	Part Description	Qty
22		KNO	EB1F24	Flat Bracket, 24"	1
23		KNO	EP1WMC28	Wall Mount Channel, 28H	1
			(CORE)	Core Paints	
			117	TRIM: Soft Grey	
24		KNO	111HP2SLHC	Generation by Knoll task chair, high performance arms, plastic base, standard cylinder, with lumbar, hard casters	1
			DK	FINISH: Dark	
			06	BACK: Espresso	
			USF	SEAT: Ultra Seat Foam	
			~	Standard Textile or Leather	
			(K1386)	TEX: Whip (E)	
			(UNDCOL)	*** Undecided Color ***	
25		KNO	2SASXGL	MultiGeneration by Knoll stacking chair, fixed arms, glides	2
			2	FRAME: Black	
			ON	SHELL: Onyx	
			~	Standard Textile	
			(K1386)	TEX: Whip (E)	
			(UNDCOL)	*** Undecided Color ***	
26		KNO	AUPPDU	Pencil Drawer	1

VA Administration Building

PRIVATE OFFICE C-1A

Item	Preview	Mfg	Part Number	Part Description	Qty
27		KNO	RSBWH30	Wall Hung Support Bracket, 30D	1
			P1	OPT: P1 Paint	
			(CORE)	Core Paint	
			117	PAINT: Soft Grey	
28		KNO	RSBWH36	Wall Hung Support Bracket, 36D	1
			P1	OPT: P1 Paint	
			(CORE)	Core Paint	
			117	PAINT: Soft Grey	
				Grand Total	