VA ADMINISTRATION BUILDING

EXECUTIVE SECRETARIES
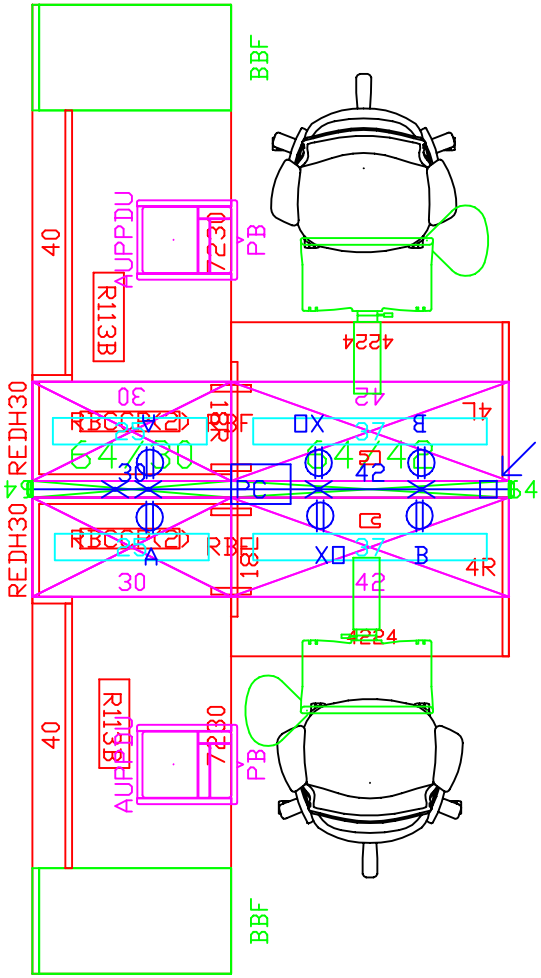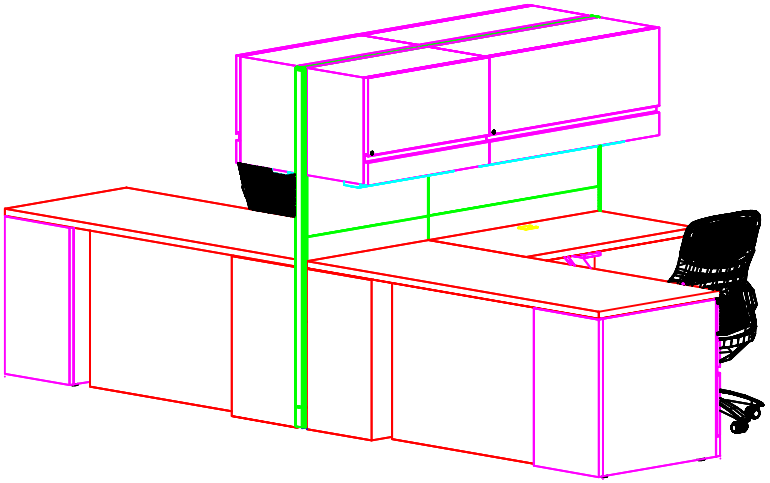
(FRONT VIEW)