VA ADMINISTRATION BUILDING

EXECUTIVE SECRETARIES
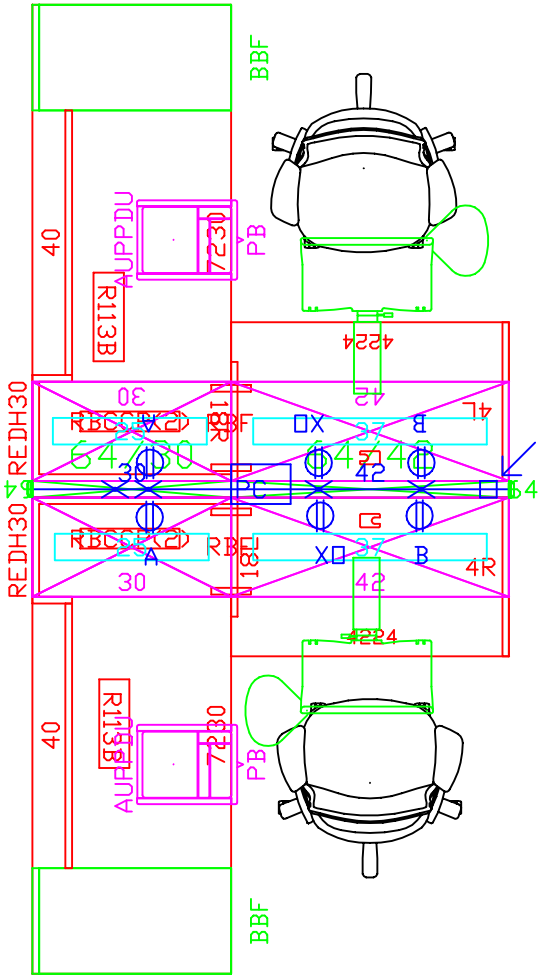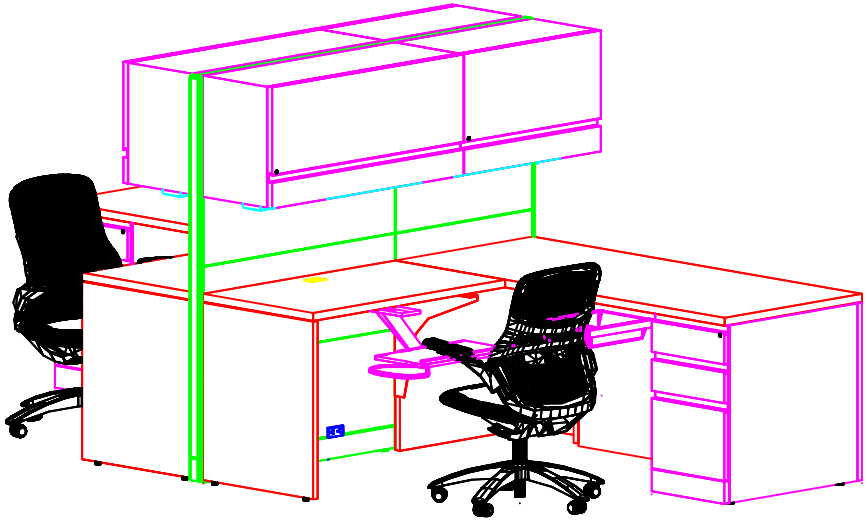
(INTERIOR VIEW)