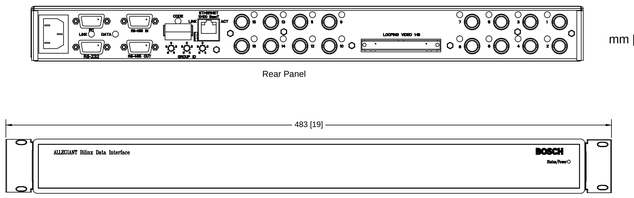

10 SECURITY CAMERA HEAD END DATA INTERFACE DIAGRAM
1/2"=1'-0"

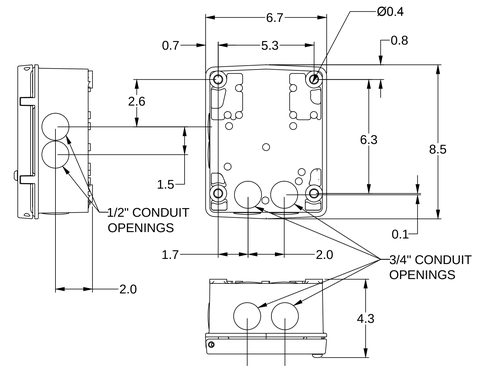

9 SECURITY CAMERA POWER SUPPLY DETAIL
NTS

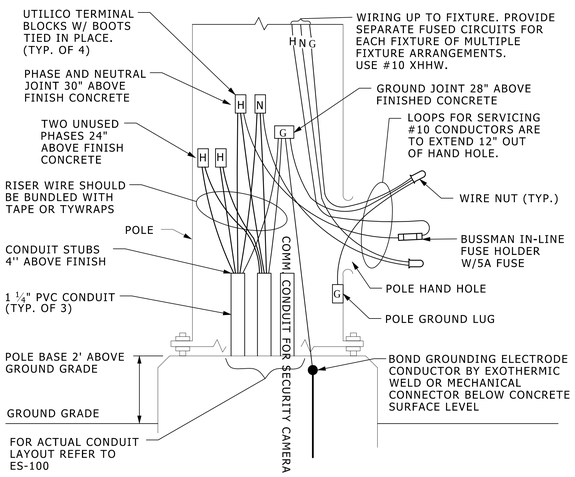

1 PARKING LOT LIGHT POLE WIRING DETAIL
NTS

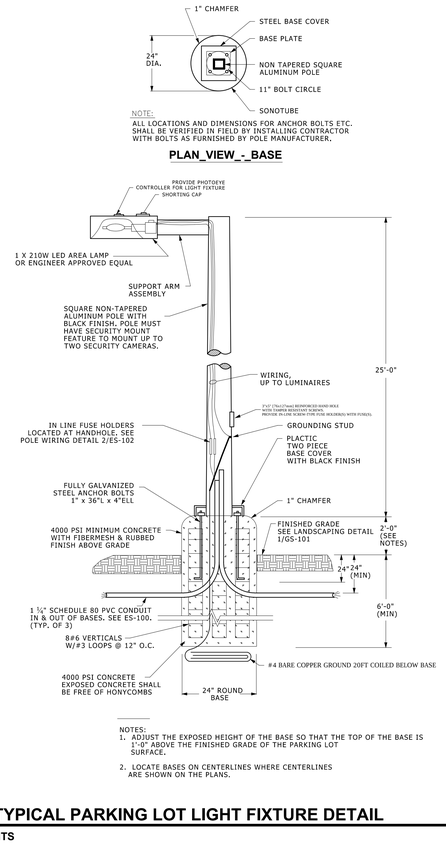

2 TYPICAL PARKING LOT LIGHT FIXTURE DETAIL
NTS

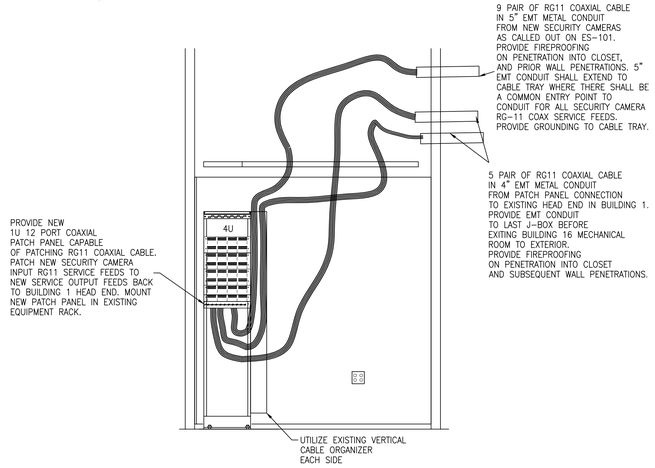

3 TELECOMM ROOM (16-14) ELEVATION, BUILDING 16
1/2"=1'-0"

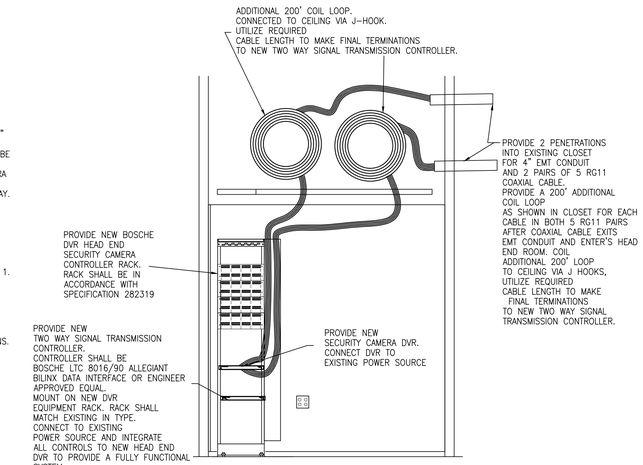

4 POLICE HEAD END SECURITY ROOM (C115) ELEVATION, BUILDING 1
1/2"=1'-0"

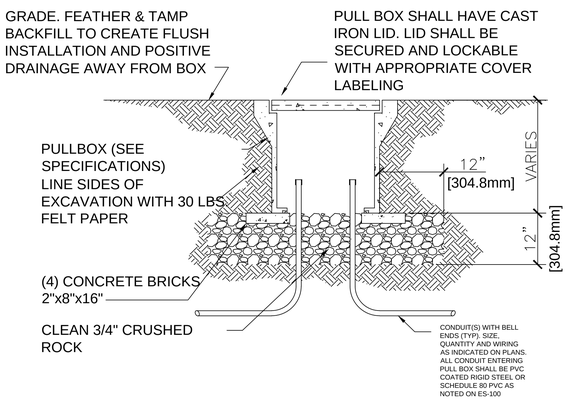

5 UNDERGROUNd PULL BOX DETAIL (TURF AREAS)
NTS

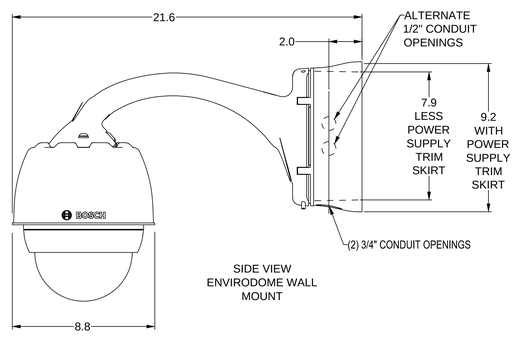

6 WALL/ FLUSH SECURITY CAMERA MOUNTING DETAIL
NTS

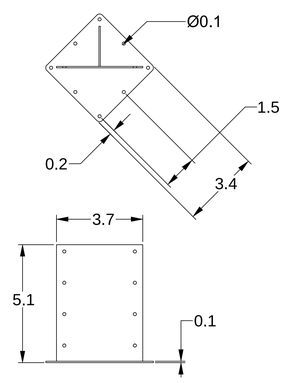

7 SECURITY CAMERA MOUNTING PLATE
NTS

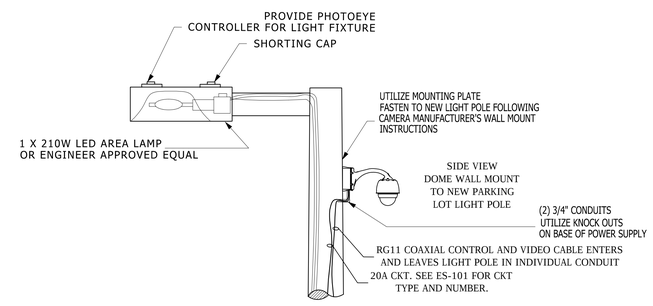

8 PARKING LOT LIGHT POLE SECURITY CAMERA MOUNTING DETAIL
NTS

Revisions	Date

(Company Logo/Information Block)

Drawing Title: ELECTRICAL DETAILS	Project Title: UPGRADE FOR BUILDING 16 SITEWORK		Date: 05/04/2013
			Project No.: 528A7-13-715
Approved: Facility Manager	Building Number: 16	Checked: CF	Drawn: AZH
	Location: VAMC SYRACUSE, NY		DRAWING NO. ES-102 Dwg. 11 Of 11

VA HEALTHCARE NETWORK UPSTATE NEW YORK

DEPT. OF VETERANS AFFAIRS