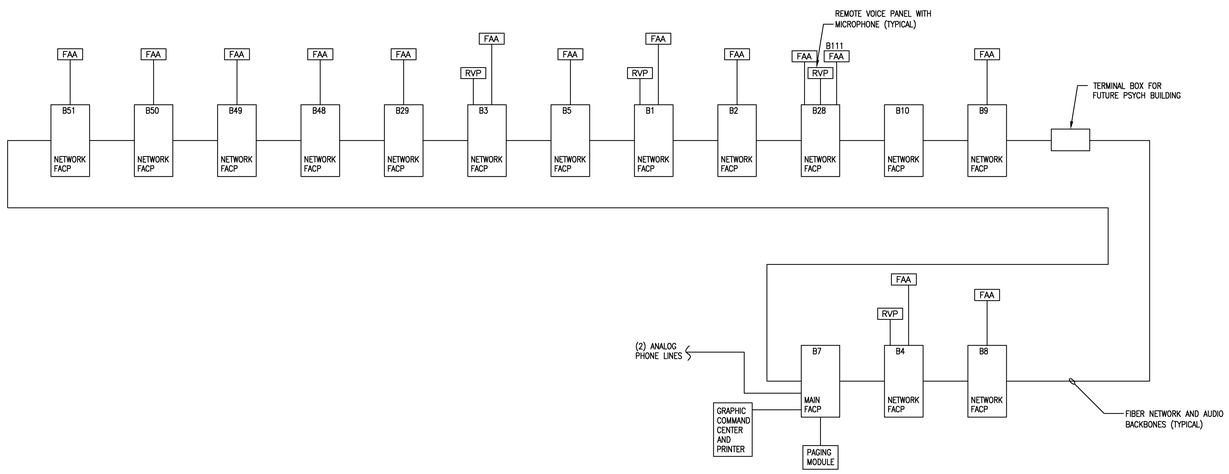

1 E001 FIRE ALARM NETWORK RISER DIAGRAM
SCALE = NTS

100% Construction Documents - For Construction

No	REVISION	DATE

FP&C Consultants, Inc.
3770 Broadway
Kansas City, MO 64111
816.931.3377
www.fpc-consultants.com

Design Tree
ENGINEERING AND LAND SURVEYING
Alexandria Office
120 17th Avenue W.
Alexandria, MN 56308
(320) 762-1290
St. Cloud Office
3339 West St. Germain, Suite 250
St. Cloud, MN 56301
(320) 217-5557

JLG architects
Alexandria
525 Broadway Street
Alexandria, MN 56308
phone 320.759.9030
facsimile 320.759.9062
www.jlgarchitects.com

copyright © 2013

JEFFREY SCOTT LICENSED 12174 03/13/13 KANSAS PROFESSIONAL ENGINEER

DRAWING TITLE: FIRE ALARM NETWORK RISER DIAGRAM

APPROVED: PROJECT DIRECTOR DATE:

PROJECT TITLE: FIRE ALARM REPLACEMENT

DATE: 03.12.2013
SCALE: AS NOTED
PROJECT NO.: 02213001
BUILDING NO.: AS NOTED
CHECKED BY: HHB
DRAWN: CAB
CAD FILE: XXX
LOCATION: ST. CLOUD VA MEDICAL CENTER ST. CLOUD, MN 56303
DRAWING NO.: FA200

St. Cloud VA Health Care System
Brainerd | Montevideo | Alexandria

VA FORM 08-6231