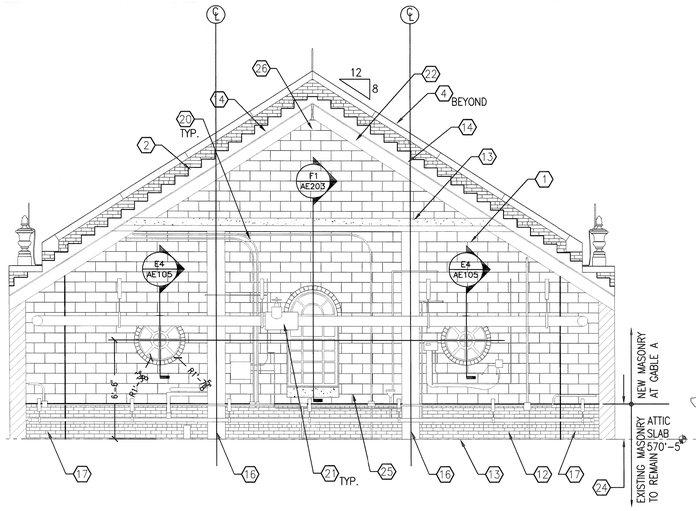

B1 GABLE A INTERIOR ELEVATION
SCALE: 1/4" = 1'-0"

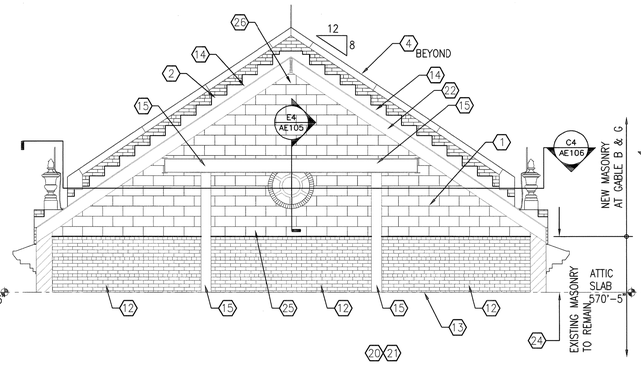

B4 GABLE B (G SIMILAR) INTERIOR ELEVATION
SCALE: 1/4" = 1'-0"

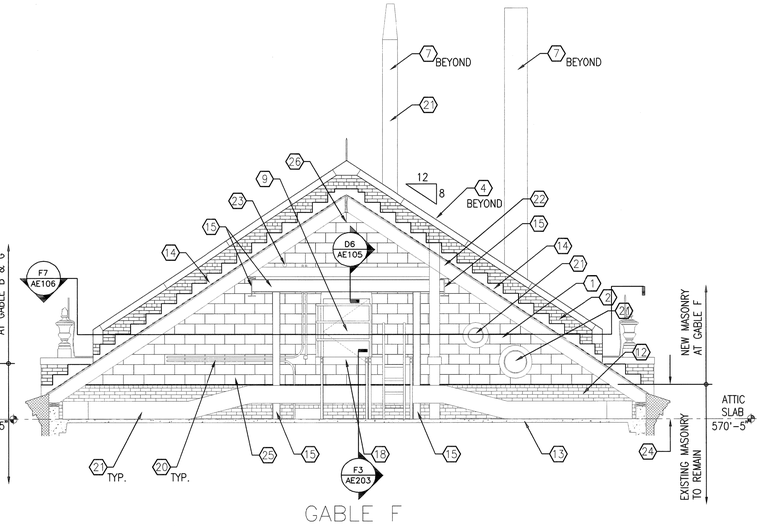

B6 GABLE F INTERIOR ELEVATION
SCALE: 1/4" = 1'-0"

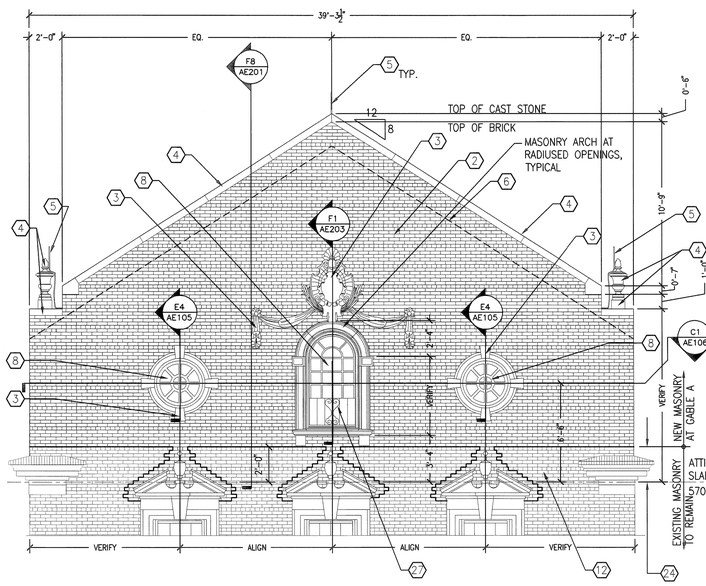

E1 GABLE A EXTERIOR ELEVATION
SCALE: 1/4" = 1'-0"

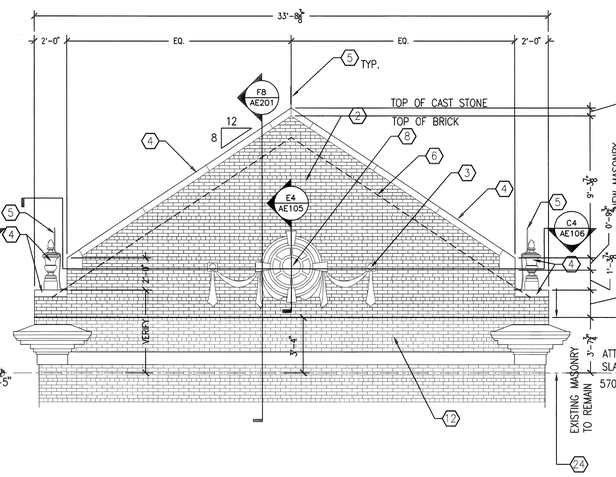

E4 GABLE B (G SIMILAR) EXTERIOR ELEVATION
SCALE: 1/4" = 1'-0"

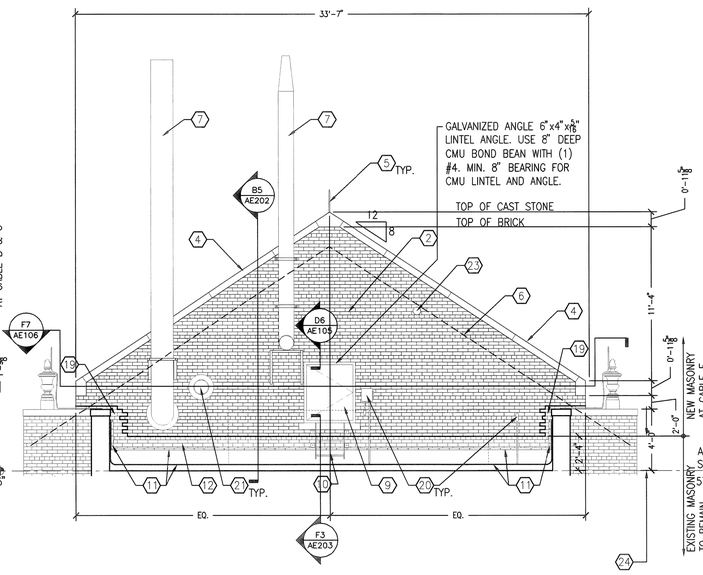

F6 GABLE F EXTERIOR ELEVATION
SCALE: 1/4" = 1'-0"

GENERAL SHEET NOTES

THE FOLLOWING APPLIES TO EXISTING ITEMS WHETHER OVERTLY SHOWN IN THESE DOCUMENTS OR NOT:

1. DETACH AND SHORE-UP IN-PLACE ALL MECHANICAL, ELECTRICAL, PLUMBING AND OTHER EXISTING ITEMS ATTACHED IN ANY WAY TO EXISTING MASONRY GABLE WALLS. REMOVE AND REUSE BRACKETS, HANGERS AND OTHER EXISTING DEVICES REQUIRED FOR REATTACHMENT OF SUCH ITEMS. DO NOT DISABLE, DISCONNECT OR OTHERWISE DISCONTINUE OR DISRUPT THE USE OF EXISTING MECHANICAL, ELECTRICAL, PLUMBING, FIRE PROTECTION AND OTHER EXISTING ITEMS. UNLESS OTHERWISE NOTED, SUCH ITEMS SHALL REMAIN IN PLACE AND IN FULL OPERATION. WHEN SUCH ITEMS ARE LOCATED OUTBOARD OF TEMPORARY PARTITION, AND BECAUSE SUCH ITEMS ARE OTHERWISE EXPOSED TO WEATHER, EACH SHALL BE COVERED AND PROTECTED FROM DAMAGE AND REMAIN FULLY OPERATION WITHOUT ANY DAMAGE. ALL JOINTS IN ELECTRICAL CONDUIT SHALL BE COVERED WITH WATER-TIGHT WRAP. ALL PENETRATIONS IN CONCRETE FLOORS SHALL BE SEALED WATER-TIGHT. PROVIDE WEATHER-PROOF SHEET COVERING FOR EXPOSED AND INSULATED DUCTWORK AND FOR INSULATED PIPING FOR THE TOTAL DURATION OF TIME THAT WORK IS PROCEEDING AT ADJACENT GABLE. REMOVE TEMPORARY PROTECTIVE COVERING AFTER MASONRY WORK IS COMPLETED AT WORK LOCATION. REMOVE SHORING AND REATTACH MECHANICAL, ELECTRICAL, PLUMBING, FIRE PROTECTION EQUIPMENT AND OTHER EXISTING ITEMS TO NEW MASONRY USING EXISTING BRACKETS, HANGERS AND OTHER EXISTING DEVICES. PROVIDE WALL FASTENERS, ANCHOR BOLTS AND CLIPS TO BE OF EQUAL OR GREATER STRENGTH THAN EXISTING TO REATTACH SUCH ITEMS. FINALLY, REMOVE TEMPORARY PARTITION WHEN DIRECTED TO DO SO BY THE COTR.
2. THE GENERAL CONTRACTOR SHALL COORDINATE THE LOCATION OF TEMPORARY PARTITIONS CONSIDERING EXISTING CONDITIONS AND WORK-ROOM REQUIREMENTS. EXACT LOCATIONS SHALL BE APPROVED BY THE COTR.
3. FOR REPLACING EXISTING DECORATIVE MASONRY STONEWORK, THE CONTRACTOR SHALL CAREFULLY EXTRACT EXISTING ELEMENTS AND CREATE A MOLD IN ORDER TO CREATE A FACSIMILE REPRODUCTION OF THE EXISTING DECORATIVE ELEMENTS IN NEW DECORATIVE CAST STONE.
4. WINDOW LOCATIONS TO REPLICATE FORMER LOCATIONS.

SHEET KEYNOTES (#)

1. NEW 8" CMU STRUCTURAL BACK-UP WALL.
2. NEW BRICK MASONRY VENEER ON EXTERIORS; MATCH EXISTING FACE BRICK SIZE, SHAPE, COLOR AND BRICK PATTERN.
3. CAREFULLY REMOVE EXISTING DECORATIVE STONEWORK AND INSTALL NEW DECORATIVE CAST STONE.
4. NEW DECORATIVE FACSIMILE REPRODUCTION CAST STONE UNITS.
5. SEE ELECTRICAL DRAWINGS FOR WORK RELATED TO LIGHTNING PROTECTION SYSTEMS.
6. LINE OF ROOF BEYOND.
7. EXISTING STAINLESS STEEL STACK. SEE MECHANICAL DRAWINGS FOR WORK RELATED TO STACKS.
8. CAREFULLY REMOVE AND REINSTALL EXISTING WINDOW. REFURBISH, CLEAN AND PAINT WOOD SURFACES.
9. REINSTALL EXISTING H.M. DOOR AND H.M. FRAME. PAINT ALL SURFACES.
10. REINSTALL EXISTING LADDER.
11. PROTECT EXISTING ROOF AND FLASHING. INSTALL 3/4" PLYWOOD OR SIMILAR TO PROTECT ROOF DURING CONSTRUCTION.
12. EXISTING MASONRY TO REMAIN. CLEAN FACE OF MASONRY WHERE INDICATED. SEAL EXTERIOR MASONRY TO REMAIN ABOVE ATTIC FLOOR AS SPECIFIED.
13. EXISTING CONCRETE FLOOR.
14. NEW STAINLESS STEEL STEP FLASHING.
15. EXISTING STEEL STRUCTURE TO REMAIN.
16. EXISTING CONCRETE PILASTER TO REMAIN.
17. REINSTALL MASONRY PILASTER. PROVIDE NEW MASONRY WHERE INDICATED.
18. REMOVE AND REINSTALL EXISTING STEEL LANDING, STAIRS AND GUARDRAIL.
19. SAW-TOOTH NEW BRICK INTO EXISTING BRICK.
20. SEE ELECTRICAL DRAWINGS FOR WORK RELATED TO ELECTRICAL SYSTEMS.
21. SEE MECHANICAL DRAWINGS FOR WORK RELATED TO MECHANICAL SYSTEMS.
22. SUPPORT EXISTING ROOF STRUCTURE WITH DUST-PROOF ENGINEERED TEMPORARY PARTITION DURING CONSTRUCTION. REMOVE TEMPORARY PARTITION WHEN DIRECTED BY COTR.
23. EXISTING ATMOSPHERIC VENT PIPE.
24. TUCK POINT EXPOSED EXISTING MASONRY TO REMAIN IN INDICATED AREA ABOVE ATTIC SLAB. SEAL EXTERIOR MASONRY TO REMAIN ABOVE ATTIC FLOOR AS SPECIFIED.
25. INSTALL FULL-HEIGHT, FULL-WIDTH TEMPORARY PARTITION PRIOR TO BEGINNING ANY DEMOLITION. SEE B7/AE201. LOCATION TO BE APPROVED BY COTR.
26. SEE D1/AE201 FOR TYPICAL STEPPED CMU BOND BEAM.
27. REMOVE AND REINSTALL WROUGHT IRON RAIL.

KEYPLAN

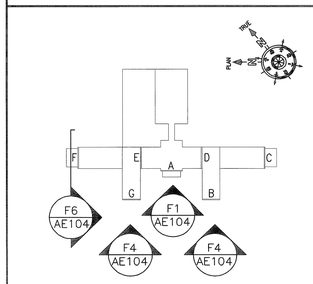

REVISION NO.	REVISION DESCRIPTION	By Date

Revisions

Department of Veterans Affairs
Lebanon
VA Medical Center
1700 South Lincoln Avenue
Lebanon, PA 17042

SEAL

Architect/Engineer Address
Harrell, Saltrick & Hopper
Design & Management Solutions for the Built Environment
8016 TOWER POINT DRIVE
CHARLOTTE, NC 28227
P 704.814.1320
F 704.321.0833
WWW.HSHPC.COM
COPYRIGHT © 2013 HARRELL SALTRICK & HOPPER, PC
HSH PROJECT # 11064

Recommended Approvals:	
1. MEDICAL DIRECTOR	6. OPERATIONS SERVICE LINE MANAGER
2. ASSOCIATE DIRECTOR	7. INFECTION CONTROL MANAGER
3. CHIEF OF STAFF	8. SAFETY MANAGER
4. ASSOC. DIRECTOR	9. GENERAL ENGINEER
5. SERVICE LINE MGRS.	10. COTR

Drawing Title: BUILDING 1 ENLARGED GABLE ELEVATIONS

BID DOCUMENTS

Project Title: FACADE CORRECTIONS BUILDING 1

Date: FEBRUARY 28, 2013

Project Number: 595-11-117

Drawn	Building Number	AutoCAD File Name	DRAWING No.
GG			AE104
Checked	Reviewed	Const. Contract No.	DWG OF

Veterans Affairs

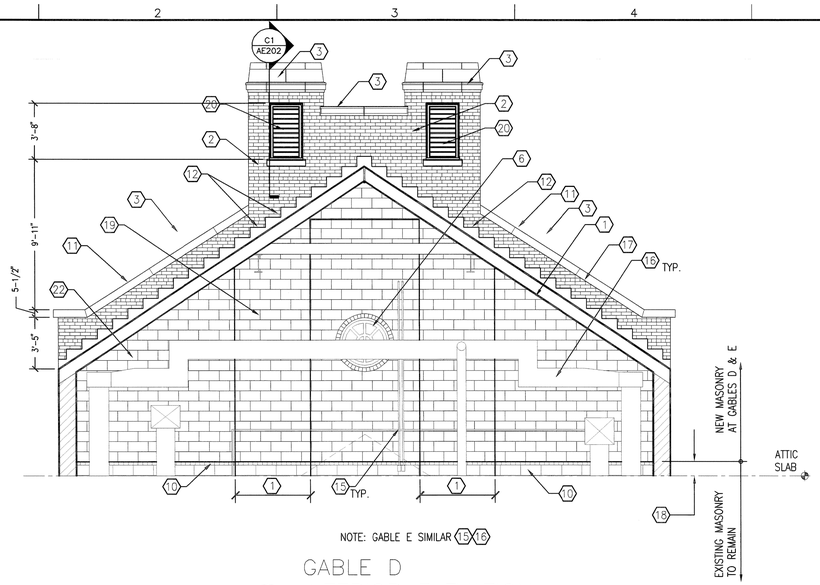

NOTE: GABLE E SIMILAR 15 16

B2 GABLE D INTERIOR ELEVATION

SCALE: 1/4" = 1'-0"

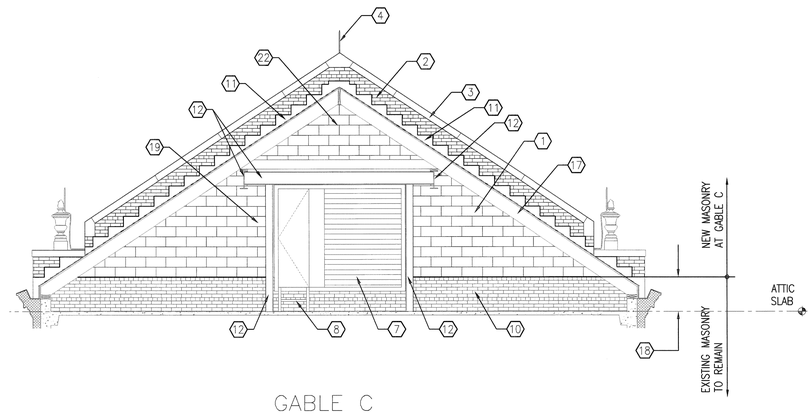

B6 GABLE C INTERIOR ELEVATION

SCALE: 1/4" = 1'-0"

DEDUCTIVE ALTERNATE

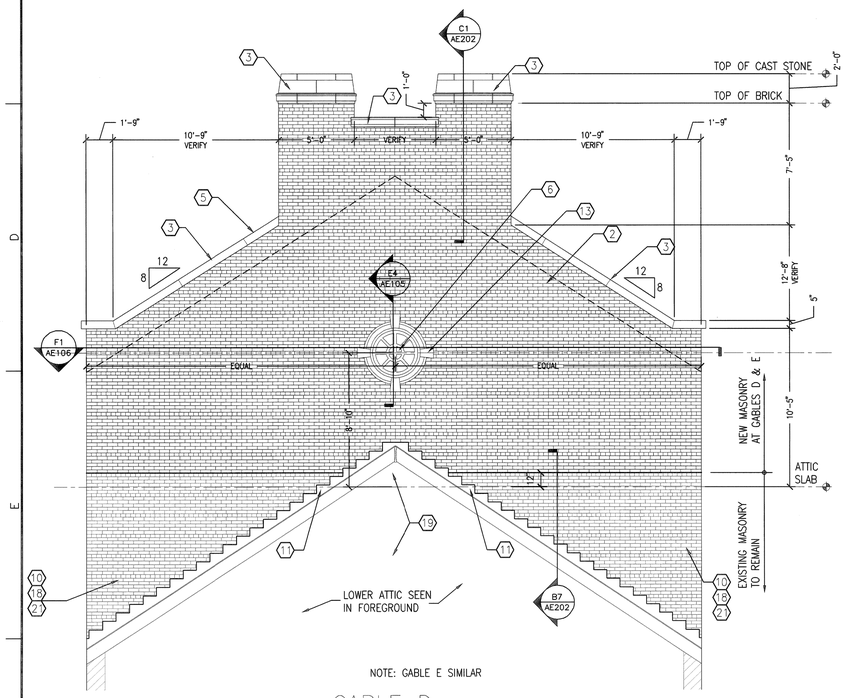

NOTE: GABLE E SIMILAR

E2 GABLE D EXTERIOR ELEVATION

SCALE: 1/4" = 1'-0"

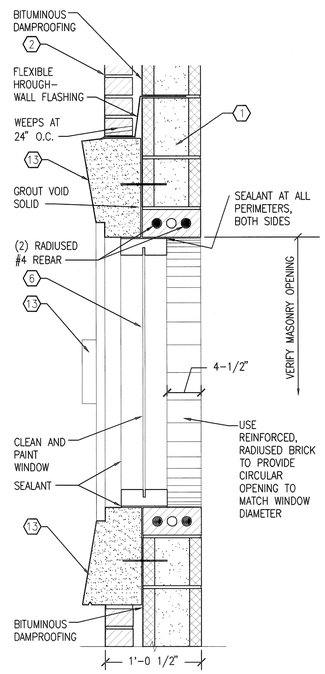

E4 TYPICAL ENLARGED SECTION DETAIL AT RADIUSED BRICK OPENING

SCALE: 1 1/2" = 1'-0"

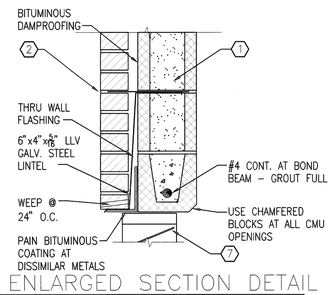

D6 ENLARGED SECTION DETAIL

SCALE: 1 1/2" = 1'-0"

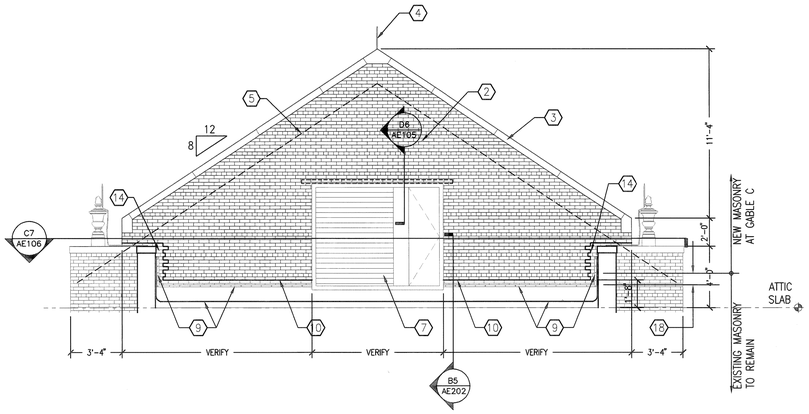

E6 GABLE C EXTERIOR ELEVATION

SCALE: 1/4" = 1'-0"

DEDUCTIVE ALTERNATE

GENERAL SHEET NOTES

THE FOLLOWING APPLIES TO EXISTING ITEMS WHETHER OVERTLY SHOWN IN THESE DOCUMENTS OR NOT:

1. DETACH AND SHORE-UP IN-PLACE ALL MECHANICAL, ELECTRICAL, PLUMBING AND OTHER EXISTING ITEMS ATTACHED IN ANY WAY TO EXISTING MASONRY GABLE WALLS. REMOVE AND REUSE BRACKETS, HANGERS AND OTHER EXISTING DEVICES REQUIRED FOR REATTACHMENT OF SUCH ITEMS. DO NOT DISABLE, DISCONNECT OR OTHERWISE DISCONTINUE OR DISRUPT THE USE OF EXISTING MECHANICAL, ELECTRICAL, PLUMBING, FIRE PROTECTION AND OTHER EXISTING ITEMS. UNLESS OTHERWISE NOTED, SUCH ITEMS SHALL REMAIN IN PLACE AND IN FULL OPERATION. WHEN SUCH ITEMS ARE LOCATED OUTBOARD OF TEMPORARY PARTITION, AND BECAUSE SUCH ITEMS ARE OTHERWISE EXPOSED TO WEATHER, EACH SHALL BE COVERED AND PROTECTED FROM DAMAGE AND REMAIN FULLY OPERATION WITHOUT ANY DAMAGE. ALL JOINTS IN ELECTRICAL CONDUIT SHALL BE COVERED WITH WATER-TIGHT WRAP. ALL PENETRATIONS IN CONCRETE FLOORS SHALL BE SEALED WATER-TIGHT. PROVIDE WEATHER-PROOF SHEET COVERING FOR EXPOSED AND INSULATED DUCTWORK AND FOR INSULATED PIPING FOR THE TOTAL DURATION OF TIME THAT WORK IS PROCEEDING AT ADJACENT GABLE. REMOVE TEMPORARY PROTECTIVE COVERING AFTER MASONRY WORK IS COMPLETED AT WORK LOCATION. REMOVE SHORING AND REATTACH MECHANICAL, ELECTRICAL, PLUMBING, FIRE PROTECTION EQUIPMENT AND OTHER EXISTING ITEMS TO NEW MASONRY USING EXISTING BRACKETS, HANGERS AND OTHER EXISTING DEVICES. PROVIDE WALL FASTENERS, ANCHOR BOLTS AND CLIPS TO BE OF EQUAL OR GREATER STRENGTH THAN EXISTING TO REATTACH SUCH ITEMS. FINALLY, REMOVE TEMPORARY PARTITION WHEN DIRECTED TO DO SO BY THE COTR.
2. THE GENERAL CONTRACTOR SHALL COORDINATE THE LOCATION OF TEMPORARY PARTITIONS CONSIDERING EXISTING CONDITIONS AND WORK-ROOM REQUIREMENTS. EXACT LOCATIONS SHALL BE APPROVED BY THE COTR.

SHEET KEYNOTES (#)

1. NEW 8" CMU ON INTERIOR, GROUTED AND REINFORCED.
2. NEW BRICK MASONRY ON EXTERIORS; MATCH EXISTING FACE BRICK AND BRICK PATTERN.
3. NEW DECORATIVE CAST STONE UNITS: MATCH EXISTING.
4. SEE ELECTRICAL DRAWINGS FOR WORK RELATED TO LIGHTNING PROTECTION SYSTEMS.
5. LINE OF ROOF BEYOND.
6. CAREFULLY REMOVE AND REINSTALL EXISTING WINDOW. CLEAN AND PAINT WINDOW FRAME SURFACES TO REMAIN.
7. REMOVE AND REINSTALL EXISTING ALUMINUM DOOR AND LOUVER.
8. REINSTALL EXISTING LADDER.
9. PROTECT EXISTING ROOF AND FLASHING. INSTALL 3/8" PLYWOOD TO PROTECT ROOF
10. EXISTING MASONRY TO REMAIN.
11. NEW STAINLESS STEEL STEP FLASHING.
12. EXISTING STEEL STRUCTURE TO REMAIN.
13. REMOVE EXISTING AND INSTALL NEW DECORATIVE STONEWORK. MATCH EXISTING PROFILES USING CAST STONE UNITS.
14. SAW-TOOTH NEW BRICK INTO EXISTING BRICK.
15. SEE ELECTRICAL DRAWINGS FOR WORK RELATED TO ELECTRICAL SYSTEMS.
16. SEE MECHANICAL DRAWINGS FOR WORK RELATED TO MECHANICAL SYSTEMS.
17. SUPPORT EXISTING ROOF STRUCTURE WITH DUST-PROOF ENGINEERED TEMPORARY PARTITION DURING CONSTRUCTION. REMOVE TEMPORARY PARTITION WHEN DIRECTED BY COTR.
18. TUCK POINT EXPOSED EXISTING BRICK TO REMAIN IN INDICATED AREA ABOVE ATTIC SLAB.
19. INSTALL FULL-HEIGHT, FULL-WIDTH TEMPORARY PARTITION PRIOR TO BEGINNING ANY DEMOLITION. SEE B7/AE201. LOCATION TO BE APPROVED BY COTR.
20. REMOVE, SALVAGE, REINSTALL AND PAINT WOOD LOUVERS (4 LOCATIONS).
21. SEAL EXTERIOR MASONRY TO REMAIN ABOVE ATTIC FLOOR AS SPECIFIED.
22. SEE D1/AE201 FOR TYPICAL STEPPED CMU BOND BEAM.

KEYPLAN

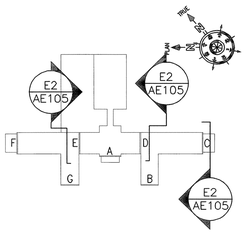

REVISION NO.	REVISION DESCRIPTION	
Revisions		By Date

Department of Veterans Affairs
Lebanon
VA Medical Center
1700 South Lincoln Avenue
Lebanon, PA 17042

SEAL

Architect/Engineer Address

Harrell, Saltrick & Hopper

Design & Management Solutions for the Built Environment

8016 TOWER POINT DRIVE
CHARLOTTE, NC 28227

P 704.814.1320
F 704.321.0833

WWW.HSHPC.COM

COPYRIGHT © 2013 HARRELL SALTRICK & HOPPER, PC

HSH PROJECT # 11064

Recommended Approvals:	
1. MEDICAL DIRECTOR	6. OPERATIONS SERVICE LINE MANAGER
2. ASSOCIATE DIRECTOR	7. INFECTION CONTROL MANAGER
3. CHIEF OF STAFF	8. SAFETY MANAGER
4. ASSOC. DIRECTOR	9. GENERAL ENGINEER
5. SERVICE LINE MGRS.	10. COTR

Drawing Title: BUILDING 1 ENLARGED GABLE ELEVATIONS

BID DOCUMENTS

Project Title: FACADE CORRECTIONS BUILDING 1

Date: FEBRUARY 28, 2013

Project Number: 595-11-117

Drawn	Building Number	AutoCAD File Name	DRAWING No.
GG			AE105
Checked	Reviewed	Const. Contract No.	DWG OF

Veterans Affairs

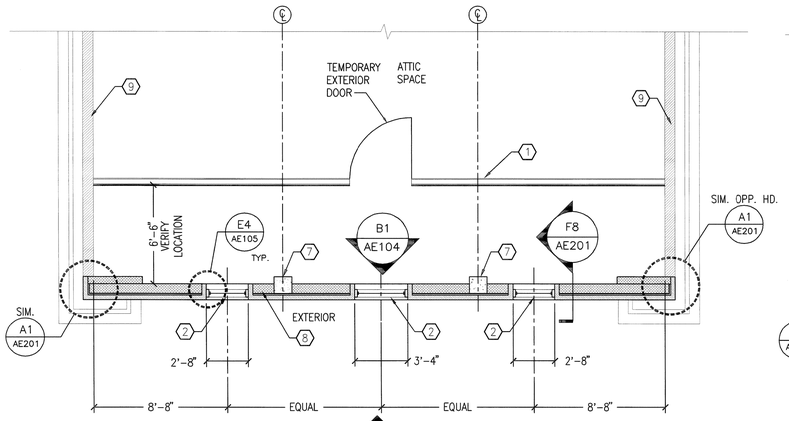

C1 GABLE A FLOOR PLAN
SCALE: 1/4" = 1'-0"

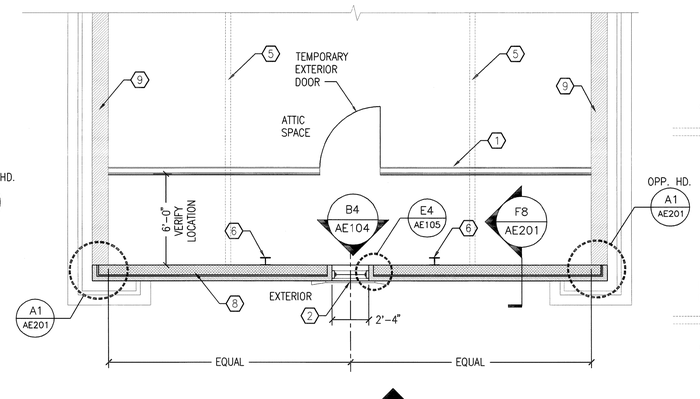

C4 GABLE B FLOOR PLAN
SCALE: 1/4" = 1'-0"
NOTE: GABLE G SIMILAR

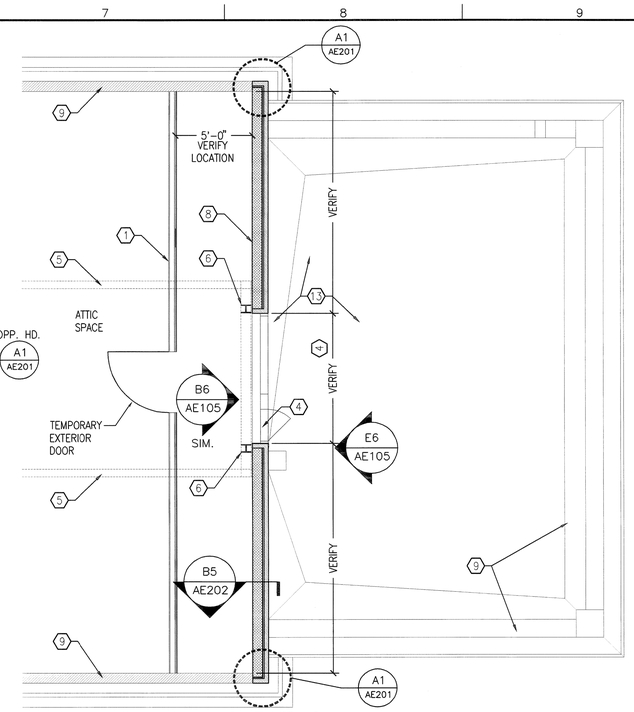

C7 GABLE C FLOOR PLAN (DEDUCTIVE ALTERNATE)
SCALE: 1/4" = 1'-0"

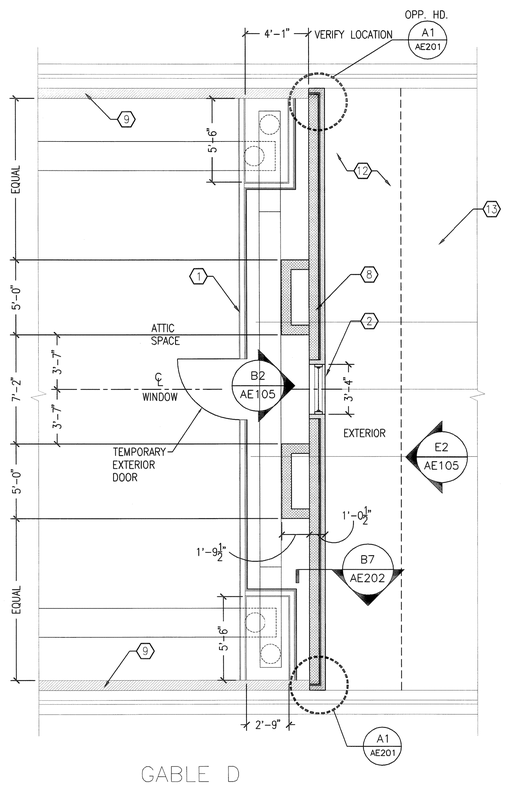

F1 GABLE D FLOOR PLAN
SCALE: 1/4" = 1'-0"

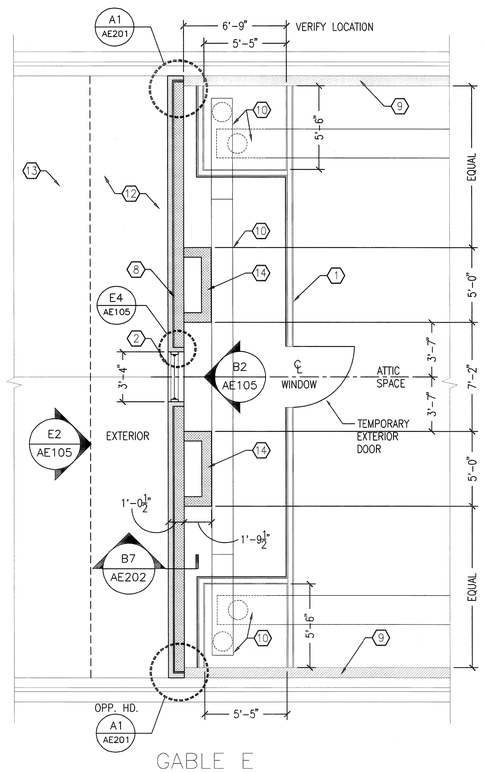

F4 GABLE E FLOOR PLAN
SCALE: 1/4" = 1'-0"

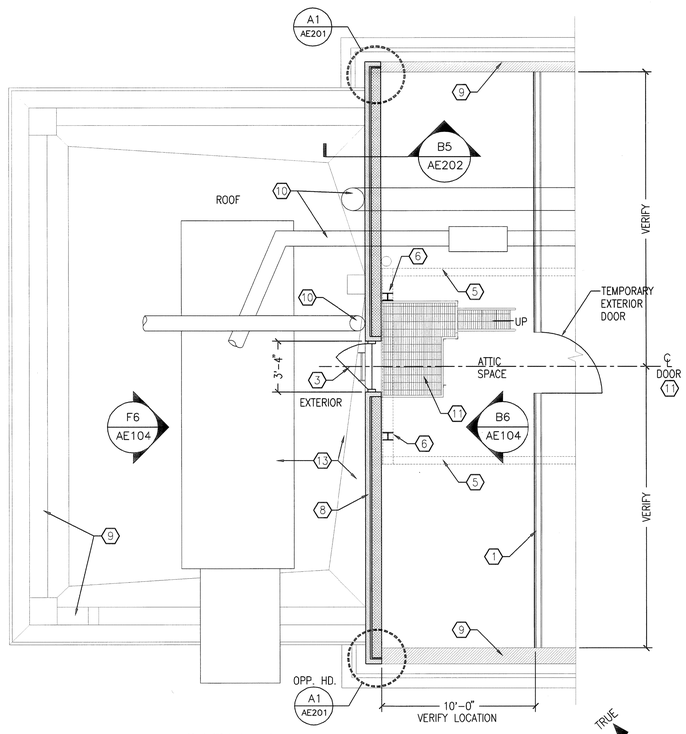

F7 GABLE F FLOOR PLAN
SCALE: 1/4" = 1'-0"

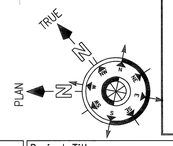

GENERAL SHEET NOTES

1. THE GENERAL CONTRACTOR SHALL COORDINATE THE LOCATION OF TEMPORARY PARTITIONS CONSIDERING EXISTING CONDITIONS AND WORK-ROOM REQUIREMENTS. EXACT LOCATIONS SHALL BE APPROVED BY THE COTR.

SHEET KEYNOTES (#)

1. SUPPORT EXISTING ROOF STRUCTURE WITH ENGINEERED TEMPORARY PARTITION DURING CONSTRUCTION. REMOVE TEMPORARY PARTITION WHEN DIRECTED BY COTR.
2. REINSTALL EXISTING WINDOW.
3. REINSTALL EXISTING H.M. DOOR AND H.M. FRAME
4. EXISTING DOOR AND LOUVER TO REMAIN.
5. EXISTING STEEL OVERHEAD STRUCTURE TO REMAIN.
6. EXISTING STEEL COLUMN TO REMAIN.
7. EXISTING CONCRETE COLUMN TO REMAIN.
8. NEW BRICK AND CMU GABLE WALL.
9. EXISTING CONSTRUCTION TO REMAIN.
10. SEE MECHANICAL FOR MECHANICAL WORK.
11. EXISTING STEEL LANDING, STAIRS AND HANDRAIL TO REMAIN.
12. INSTALL NEW ASPHALT SHINGLES AS REQUIRED IN AREAS DISTURBED BY MASONRY WORK.
13. PROTECT EXISTING ROOFING IN AREAS ADJACENT TO WORK LOCATIONS.
14. NEW CMU PILASTERS – MATCH EXISTING

KEYPLAN

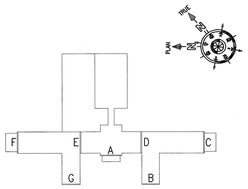

REVISION NO.	REVISION DESCRIPTION	
Revisions		By Date

Department of Veterans Affairs
Lebanon
VA Medical Center
1700 South Lincoln Avenue
Lebanon, PA 17042

SEAL: REGISTERED ARCHITECT COMMONWEALTH OF PENNSYLVANIA MARTIN CARR RAMIREZ 02/20/13

Architect/Engineer Address
Harrell, Saltrick & Hopper
Design & Management Solutions for the Built Environment
8016 TOWER POINT DRIVE, CHARLOTTE, NC 28227
P 704.814.1320 F 704.321.0833
WWW.HSHPC.COM
COPYRIGHT © 2013 HARRELL SALTRICK & HOPPER, PC
HSH PROJECT # 11064

Recommended Approvals:	
1. MEDICAL DIRECTOR	6. OPERATIONS SERVICE LINE MANAGER
2. ASSOCIATE DIRECTOR	7. INFECTION CONTROL MANAGER
3. CHIEF OF STAFF	8. SAFETY MANAGER
4. ASSOC. DIRECTOR	9. GENERAL ENGINEER
5. SERVICE LINE MGRS.	10. COTR

Drawing Title: BUILDING 1 ENLARGED GABLE FLOOR PLANS
BID DOCUMENTS

Project Title: FACADE CORRECTIONS BUILDING 1

Date: FEBRUARY 28, 2013
Project Number: 595-11-117

Drawn	Building Number	AutoCAD File Name	DRAWING No.
GG			AE106
Checked	Reviewed	Const. Contract No.	DWG OF

Veterans Affairs

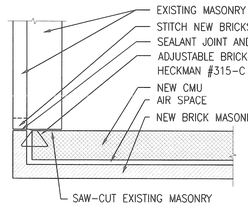

A1 PLAN DETAIL
SCALE: 3/4" = 1'-0"

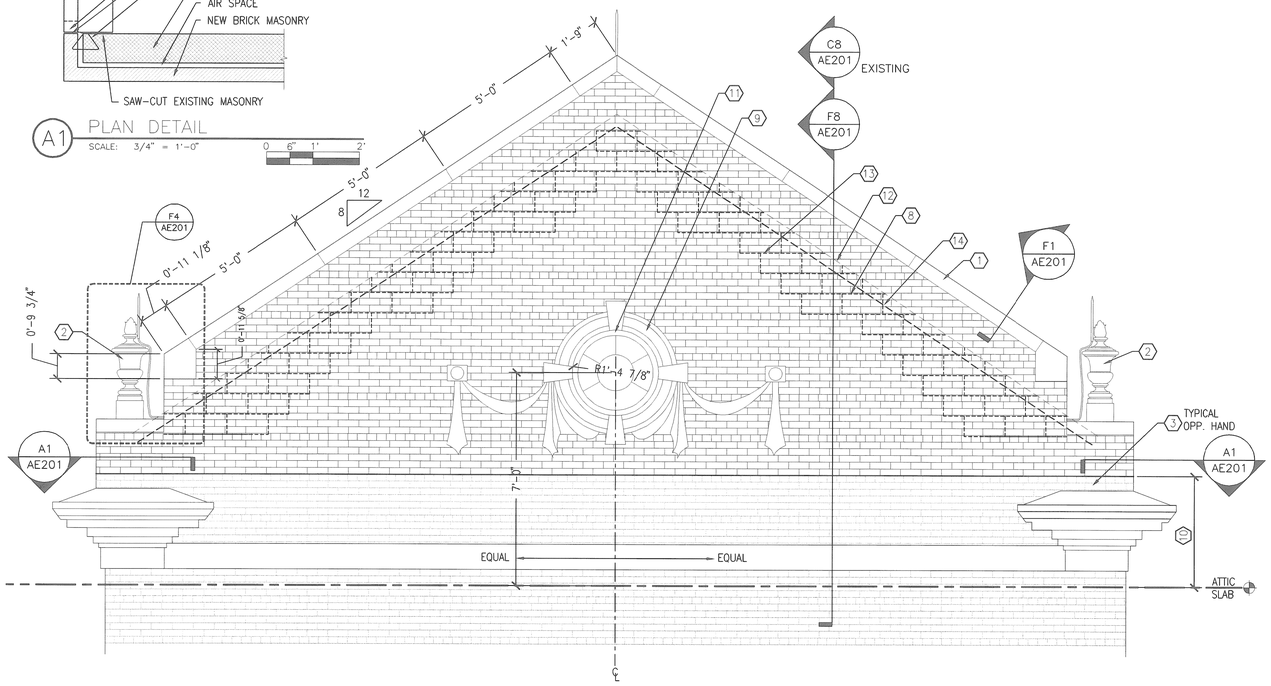

D1 ENLARGED TYPICAL GABLE ELEVATION
SCALE: 1/2" = 1'-0"

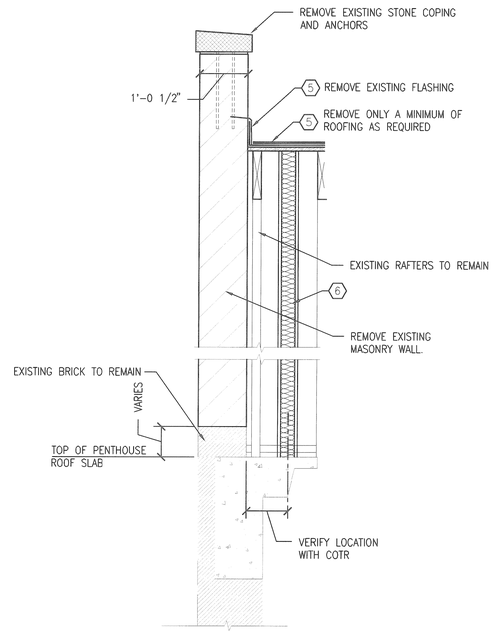

C8 TYPICAL GABLE DEMOLITION SECTION
SCALE: 3/4" = 1'-0"

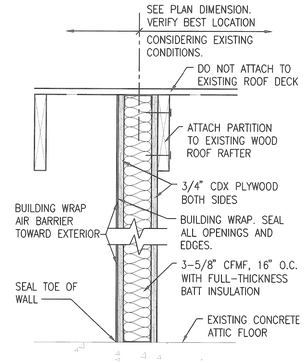

B7 TEMPORARY PARTITION SECTION
SCALE: 1-1/2" = 1'-0"

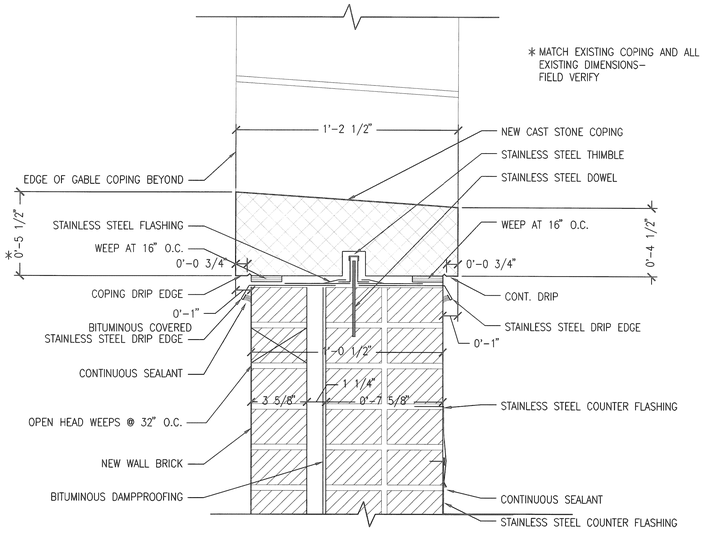

F1 COPING DETAIL
3" = 1'-0"

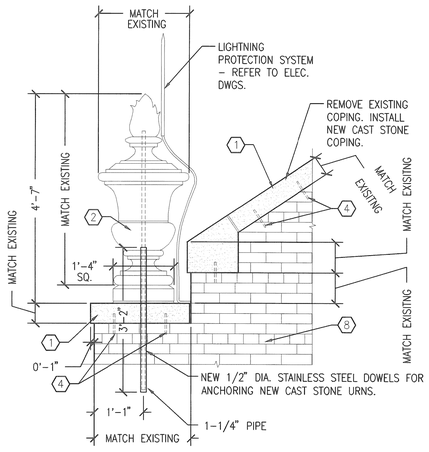

F4 TYPICAL GABLE DETAIL
SCALE: 3/4" = 1'-0"

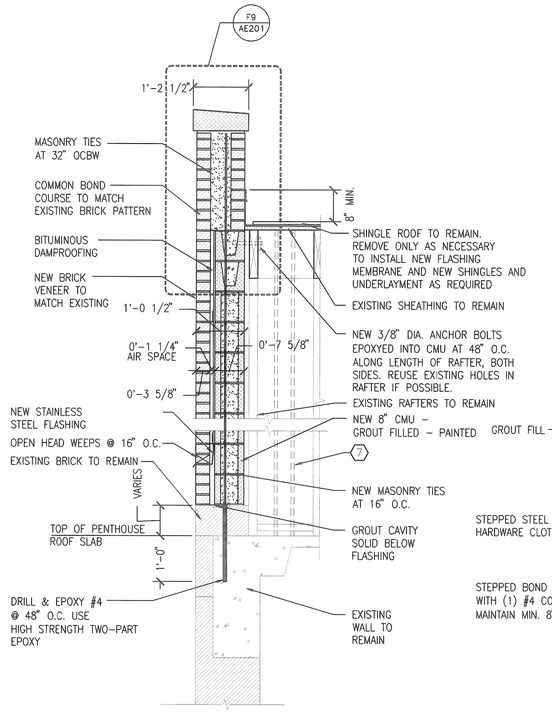

F8 GABLES A, G & B RENOVATION SECTION
SCALE: 3/4" = 1'-0"

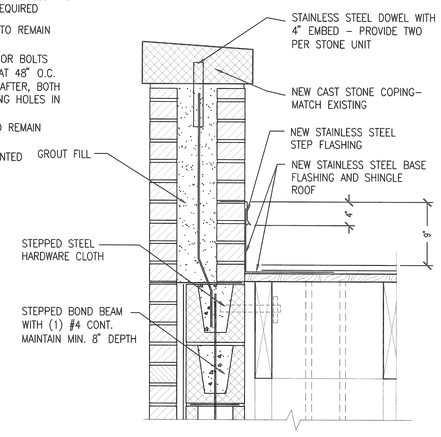

F9 ENLARGED SECTION DETAIL
SCALE: 1-1/2" = 1'-0"

GENERAL SHEET NOTES

1. EXISTING MASONRY TO BE REMOVED. INSTALL NEW BRICK TO MATCH EXISTING.
2. THE GENERAL CONTRACTOR SHALL COORDINATE THE LOCATION OF TEMPORARY DUST-PROOF PARTITIONS CONSIDERING EXISTING CONDITIONS AND WORK-ROOM REQUIREMENTS. EXACT LOCATIONS SHALL BE APPROVED BY THE COTR.
3. COLORS OF NEW CAST STONE AND NEW BRICK TO MATCH EXISITNG.

SHEET KEYNOTES ⟨#⟩

1. NEW CAST STONE COPING - MATCH EXISTING PROFILES
2. PRECAST URN - MATCH EXISTING
3. BRICK VENEER - EXISTING TO REMAIN
4. COPING ANCHOR - 1/2" DIA. STAINLESS STEEL DOWELS, TWO PER UNIT, MINIMUM
5. REMOVE EXISTING FLASHING AND ROOFING AFFECTED BY MASONRY WORK.
6. INSTALL ENGINEERED, INSULATED TEMPORARY PARTITION. SEE B7/AE201.
7. REMOVE TEMPORARY PARTITION AFTER NEW MASONRY IS INSTALLED WHEN DIRECTED BY COTR
8. NEW BRICK VENEER TO MATCH EXISTING BRICK AND BRICK PATTERN. PROVIDE "6TH COURSE HEADERS" IN COMMON BOND PATTERN. USE HALF BRICK AT HEADER COURSES TO KEEP CAVITY WALLS CLEAR.
9. NEW PRECAST WINDOW SURROUND AND DECORATIVE STONEWORK. MATCH EXISTING PROFILES USING CAST STONE UNITS.
10. TUCK POINT EXISTING BRICK TO REMAIN IN INDICATED AREA ABOVE ATTIC SLAB.
11. REMOVE AND REINSTALL EXISTING WINDOW. CLEAN AND PAINT WOOD WINDOWS TO SPECIFICATIONS.
12. LINE INDICATES TOP OF ROOF BEYOND.
13. STEPPED, GROUT-FILLED BOND BEAM - BEHIND BRICK, WITH 1 - #4 CONT., MAINTAIN MIN. 8" DEPTH.
14. #4 REBAR GROUTED INTO BOND BEAM.

REVISION NO.	REVISION DESCRIPTION	
Revisions		By Date

Department of Veterans Affairs
Lebanon
VA Medical Center
1700 South Lincoln Avenue
Lebanon, PA 17042

SEAL

Architect/Engineer Address
Harrell, Saltrick & Hopper
Design & Management Solutions for the Built Environment
8016 TOWER POINT DRIVE
CHARLOTTE, NC 28227
F 704.814.1320
F 704.501.0833
WWW.HSHPC.COM
COPYRIGHT © 2013 HARRELL SALTRICK & HOPPER, PC
HSH PROJECT # 11064

Recommended Approvals:	
1. MEDICAL DIRECTOR	6. OPERATIONS SERVICE LINE MANAGER
2. ASSOCIATE DIRECTOR	7. INFECTION CONTROL MANAGER
3. CHIEF OF STAFF	8. SAFETY MANAGER
4. ASSOC. DIRECTOR	9. GENERAL ENGINEER
5. SERVICE LINE MGRS.	10. COTR

Drawing Title: DETAILS
BID DOCUMENTS

Project Title: FACADE CORRECTIONS BUILDING 1
Drawn: GG
Building Number
AutoCAD File Name
Checked
Reviewed
Const. Contract No.

Date: FEBRUARY 28, 2013
Project Number: 595-11-117
DRAWING No. AE201
DWG OF

Veterans Affairs

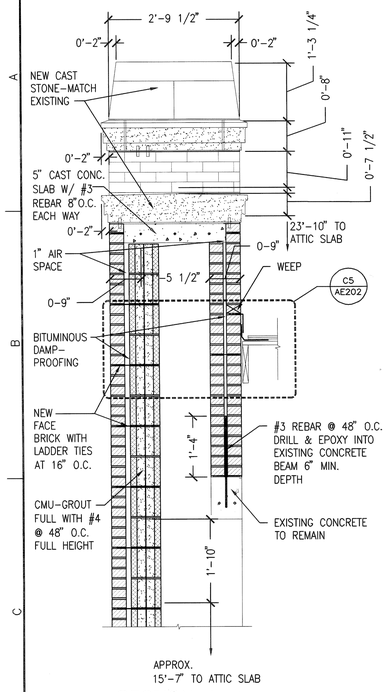

SECTION A–A

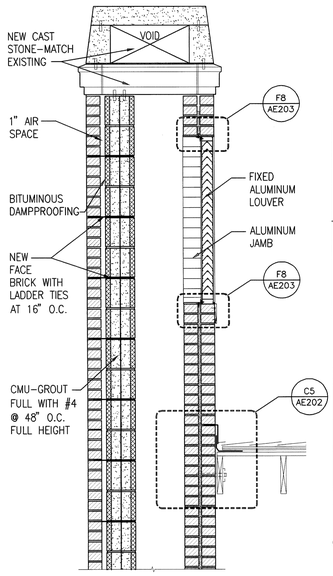

SECTION B–B

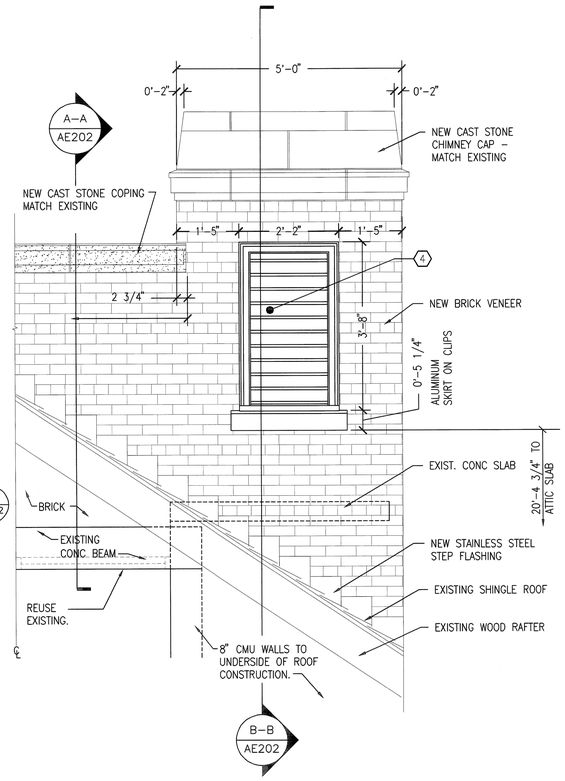

C1 VENT CHIMNEY ELEVATION & SECTIONS
SCALE: 3/4" = 1'-0"

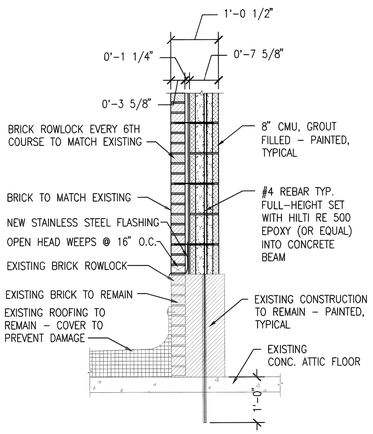

B5 GABLES C & F RENOVATION SECTION
SCALE: 3/4" = 1'-0"

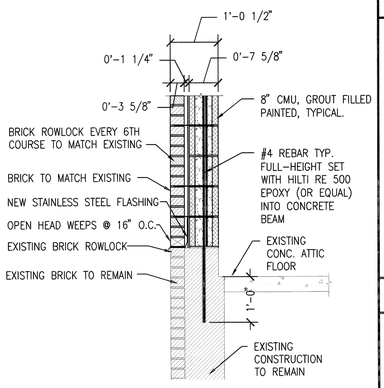

B7 GABLES D & E RENOVATION SECTION
SCALE: 3/4" = 1'-0"

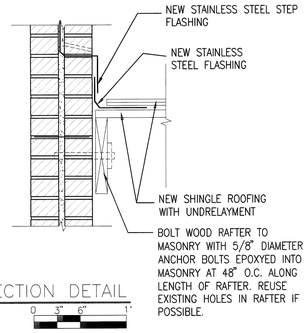

C5 ENLARGED SECTION DETAIL
SCALE: 1-1/2" = 1'-0"

GENERAL SHEET NOTES

1. PROTECT EXISTING WINDOW GLAZING AND FRAMES FROM DAMAGE DURING LINTEL REPLACEMENT WORK.

SHEET KEYNOTES (#)

1. EXISTING STEEL LINTEL TO BE REMOVED AND REPLACED.
2. EXISTING BRICK TO BE REMOVED, CLEANED AND REINSTALLED. USE GROUT TO MATCH EXISTING COLOR EXACTLY. PROVIDE WEEP HOLES AT 16" O.C. ATOP NEW GALVANIZED STEEL LINTEL AS DETAILED.
3. NEW PRECAST WINDOW DECORATIVE STONEWORK. MATCH EXISTING PROFILES USING CAST STONE UNITS.
4. REMOVE 4 EXISTING LOUVERS. PROVIDE AND INSTALL NEW ALUMINUM LOUVERS (REF.: MECH.).
5. ENSURE THAT VERTICAL PLANES OF NEW WORK AND EXISTING MASONRY TO REMAIN ARE FLUSH.
6. DECORATIVE CAST STONE TO BE REPLACED WITH NEW CAST STONE.
7. REPLICATE SPECIAL BRICK SHAPES TO MATCH EXISTING.
8. DECORATIVE CAST STONE ARCH HEADER TO BE REPLACED WITH REPLICATED ARCH HEADER IN NEW CAST STONE.

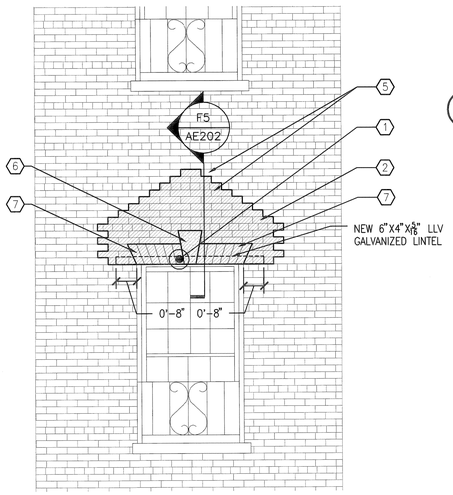

F1 ENLARGED TYPICAL WINDOW ELEVATION
SCALE: 1/2" = 1'-0"

SEE E3/AE202 FOR ATYPICAL ELEVATION.

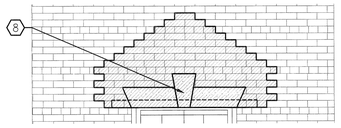

E3 ENLARGED WINDOW ELEVATION
SCALE: 1/2" = 1'-0"

FOR TYPICAL NOTES, DETAILS AND DIMENSIONS, SEE F1/AE202.

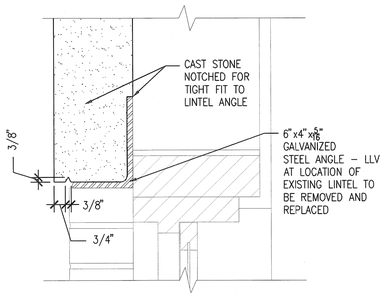

F4 ENLARGED SECTION DETAIL
SCALE: 3" = 1'-0"

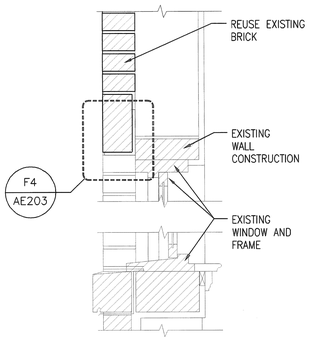

F5 NEW LINTEL DETAIL AT EXISTING WINDOWS
SCALE: 1-1/2" = 1'-0"

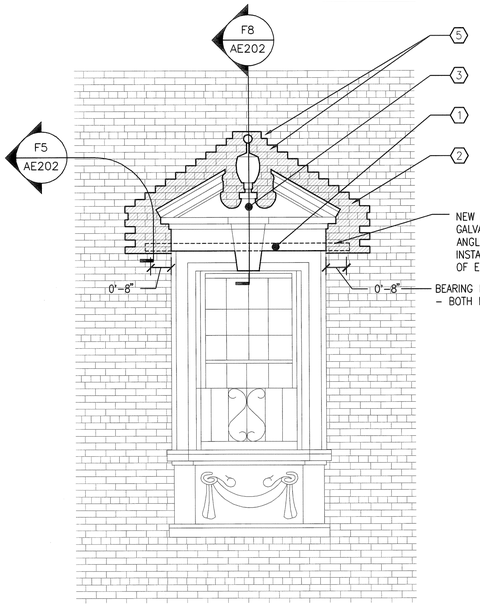

F6 ENLARGED WINDOW ELEVATION
SCALE: 1/2" = 1'-0"

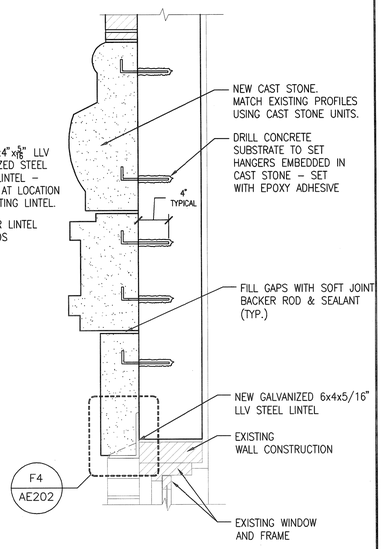

F8 NEW WINDOW LINTEL DETAIL
SCALE: 1-1/2" = 1'-0"

REVISION NO.	REVISION DESCRIPTION	
Revisions		By Date

Department of Veterans Affairs
Lebanon
VA Medical Center
1700 South Lincoln Avenue
Lebanon, PA 17042

SEAL

Architect/Engineer Address
Harrell, Saltrick & Hopper
Design & Management Solutions for the Built Environment
8016 TOWER POINT DRIVE
CHARLOTTE, NC 28227
P 704.814.1320
F 704.321.0833
WWW.HSHPC.COM
COPYRIGHT © 2013 HARRELL SALTRICK & HOPPER, PC
HSH PROJECT # 11064

Recommended Approvals:	
1. MEDICAL DIRECTOR	6. OPERATIONS SERVICE LINE MANAGER
2. ASSOCIATE DIRECTOR	7. INFECTION CONTROL MANAGER
3. CHIEF OF STAFF	8. SAFETY MANAGER
4. ASSOC. DIRECTOR	9. GENERAL ENGINEER
5. SERVICE LINE MGRS.	10. COTR

Drawing Title: DETAILS

BID DOCUMENTS

Project Title: FACADE CORRECTIONS BUILDING 1

Date: FEBRUARY 28, 2013

Project Number: 595-11-117

Drawn	Building Number	AutoCAD File Name	DRAWING No.
GG			AE202
Checked	Reviewed	Const. Contract No.	DWG OF

Veterans Affairs