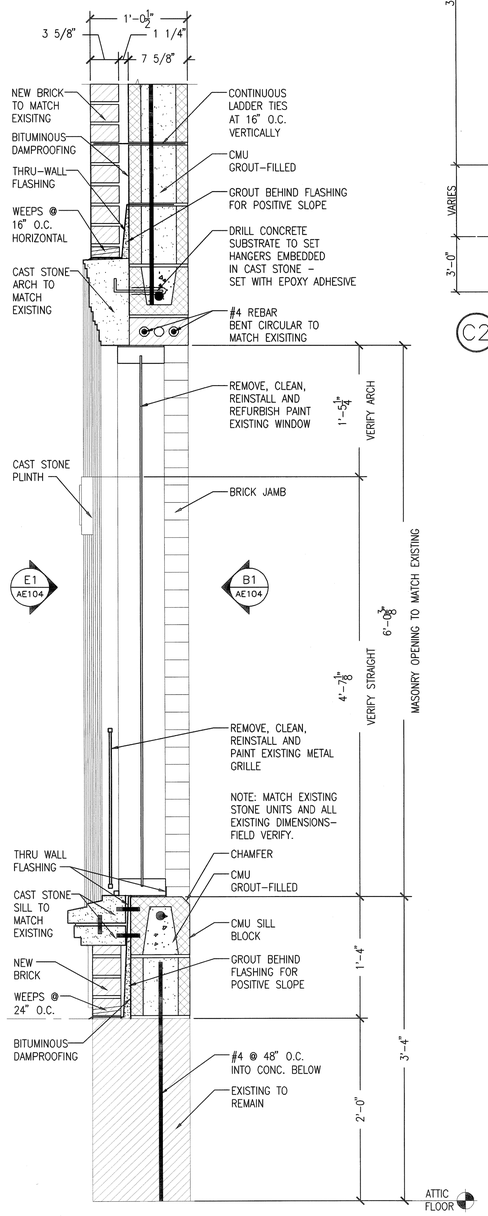

F1 WALL SECTION
SCALE: 1-1/2"=1'-0"

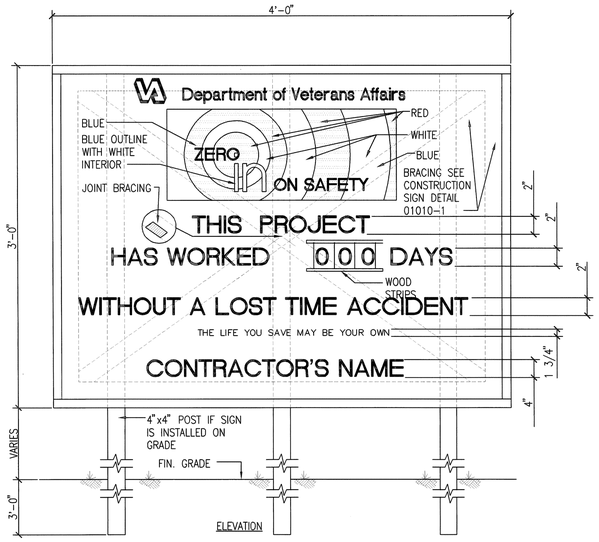

C2 SAFETY SIGN DETAIL
NOT TO SCALE
VA CAD DETAIL #: SD010000-02.DWG

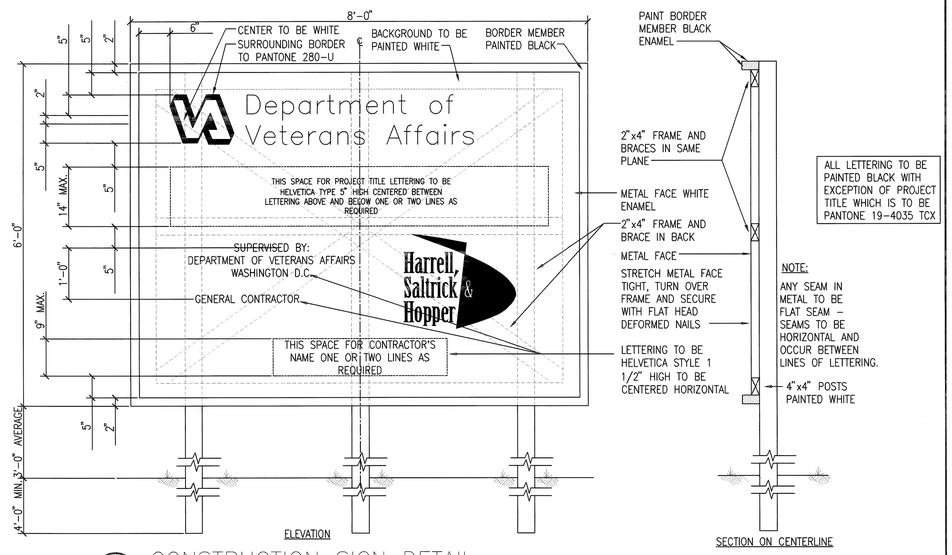

ALL LETTERING TO BE PAINTED BLACK WITH EXCEPTION OF PROJECT TITLE WHICH IS TO BE PANTONE 19-4035 TCX

NOTE:
ANY SEAM IN METAL TO BE FLAT SEAM - SEAMS TO BE HORIZONTAL AND OCCUR BETWEEN LINES OF LETTERING.

C5 CONSTRUCTION SIGN DETAIL
NOT TO SCALE
VA CAD DETAIL #: SD010000-01.DWG

GENERAL SHEET NOTES

1. LOCATE EXTERIOR SIGNAGE WHERE DIRECTED BY COTR.

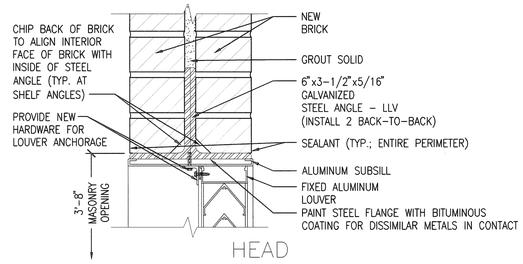

HEAD

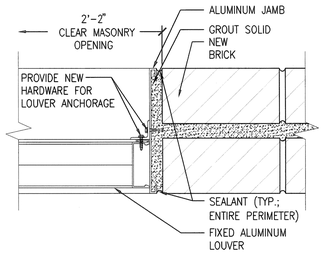

JAMB

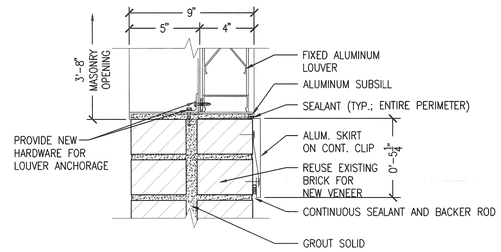

SILL

F8 LOUVER - HEAD, JAMB, & SILL DETAIL
SCALE: 3"=1'-0"

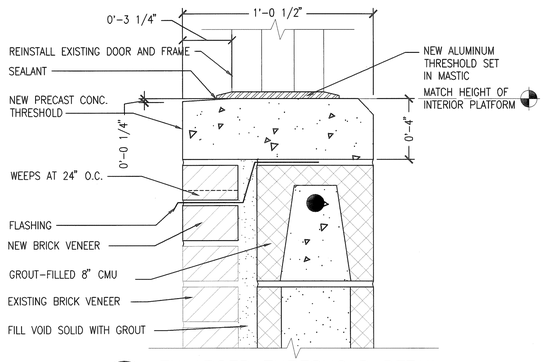

F3 ENLARGED THRESHOLD DETAIL
SCALE: 3" = 1'-0"

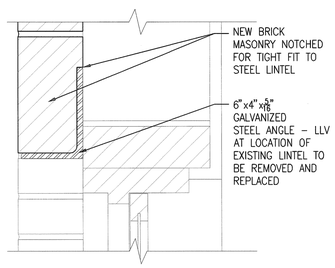

F4 ENLARGED SECTION DETAIL
SCALE: 3" = 1'-0"

REVISION NO.	REVISION DESCRIPTION	
Revisions		By Date

Department of Veterans Affairs
Lebanon
VA Medical Center
1700 South Lincoln Avenue
Lebanon, PA 17042

SEAL

Architect/Engineer Address
Harrell, Saltrick & Hopper
Design & Management Solutions for the Built Environment
8016 TOWER POINT DRIVE
CHARLOTTE, NC 28227
P 704.814.1320
F 704.321.0833
WWW.HSHPC.COM
COPYRIGHT © 2013 HARRELL SALTRICK & HOPPER, PC
HSH PROJECT # 11064

Recommended Approvals:	
1. MEDICAL DIRECTOR	6. OPERATIONS SERVICE LINE MANAGER
2. ASSOCIATE DIRECTOR	7. INFECTION CONTROL MANAGER
3. CHIEF OF STAFF	8. SAFETY MANAGER
4. ASSOC. DIRECTOR	9. GENERAL ENGINEER
5. SERVICE LINE MGRS.	10. COTR

Drawing Title: DETAILS
BID DOCUMENTS

Project Title: FACADE CORRECTIONS BUILDING 1

Date: FEBRUARY 28, 2013
Project Number: 595-11-117

Drawn	Building Number	AutoCAD File Name
GG		
Checked	Reviewed	Const. Contract No.

DRAWING No. AE203
DWG OF

Veterans Affairs

ABBREVIATIONS

AD	ACCESS DOOR
AF	AFTER FILTER
AFCE	AIR FLOW CONTROL VALVE
AFMS	AIR FLOW MEASURING STATION
AF	AIR FOIL WHEEL
AHU	AIR HANDLING UNIT
AP	ACCESS PANEL
BIW	BACKWARD INCLINED WHEEL
BG	BOTTOM GRILLE (WALL TYPE)
BR	BOTTOM REGISTER (WALL TYPE)
COR	CONTRACTING OFFICER'S REPRESENTATIVE
Db	DRY BULB TEMPERATURE
dB	DECIBELS
Dp	DEWPOINT TEMPERATURE
E/A	EXHAUST AIR
ECC	ENGINEERING CONTROL CENTER
EF	EXHAUST FAN
EPO	EMERGENCY POWER OFF (SWITCH)
EX.	EXISTING
FC	FLEXIBLE CONNECTION
FL	FLOOR
FD	FIRE DAMPER
HF	HEPA FILTER
HP	HORSEPOWER
LBS/HR	POUNDS PER HOUR
MPC	MEDIUM PRESSURE STEAM CONDENSATE RETURN
MPS	MEDIUM PRESSURE STEAM
MAX.	MAXIMUM
MIN.	MINIMUM
NOM.	NOMINAL
O/A	OUTDOOR AIR
PD	PRESSURE DROP
PF	PRE-FILTER
PH	PREHEAT
R/A	RETURN AIR
RF	RETURN FAN
RH	REHEAT COIL
Rh	RELATIVE HUMIDITY
RV	POWER TYPE ROOF VENTILATOR
S/A	SUPPLY AIR
SA	SOUND ATTENUATING UNIT
SCD	SMOKE CONTROL DAMPER
SD	SMOKE DAMPER
SP	STATIC PRESSURE
SPS	STATIC PRESSURE SENSOR
VFD	VARIABLE FREQUENCY DRIVE
VTW	VENT THROUGH WALL
Wb	WET BULB TEMPERATURE

GENERAL SYMBOLS

- POINT OF CONNECTION
- POINT OF DEMOLITION

VALVE SYMBOLS

- SHUT-OFF VALVE – SEE SPECIFICATIONS
- GLOBE VALVE
- GATE VALVE WITH 3/4 " HOSE ADAPTER
- CHECK VALVE
- ANGLE GLOBE VALVE
- BUTTERFLY VALVE
- BALL VALVE
- BALANCING VALVE
- CIRCUIT SETTER
- STRAIGHT-THRU MODULATING CONTROL VALVE
- STRAIGHT-THRU TWO POSITION CONTROL VALVE
- THREE-WAY MODULATING CONTROL VALVE
- AUTOMATIC FLOW CONTROL VALVE
- SAFETY OR PRESSURE RELIEF VALVE
- PRESSURE REDUCING VALVE
- MANUAL AIR VENT
- TEST PLUG (PRESSURE/TEMPERATURE)
- STEAM TRAP (MEDIUM/HIGH PRESSURE)
- CIRCUIT SETTER (METERING AND BALANCING)
- CONCENTRIC REDUCER

DUCTWORK SYMBOLS

- VANED ELBOW (PROVIDE ALL SQUARE OR RECTANGULAR ELBOWS WITH AIRFOIL TYPE TURNING VANES EVEN IF SYMBOL IS MISSING)
- VANED ELBOW (SHORT RADIUS)
- STANDARD RADIUS ELBOW
- 10x8 — NEW DUCT (WIDTH x DEPTH)
- FLEXIBLE DUCTWORK (INSULATED)
- EXISTING DUCT TO REMAIN
- EXISTING TO BE DEMOLISHED

GENERAL NOTES

1. THE FIRST FIGURE OF DUCT SIZE INDICATES DIMENSION OF FACE SHOWN OR INDICATED.
2. MECHANICAL CONTRACTOR SHALL PERFORM DUCT PRESSURE/LEAKAGE TEST(S) FOR ALL DUCTWORK IN THE PRESENCE COR AFTER GABLE CONSTRUCTION.
3. MECHANICAL CONTRACTOR SHALL REPAIR AND/OR REPLACE ANY ITEMS DAMAGED DURING CONSTRUCTION.

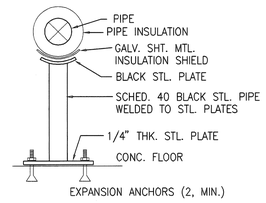

NOTE: ALL BLACK STEEL ITEMS SHALL BE PRIMED & PAINTED WITH 2 COATS OF BLACK ENAMEL PAINT. SEE SPEC. ITEM 14 FOR SPACING.

D7 PIPE SUPPORT FROM FLOOR
SCALE: NONE

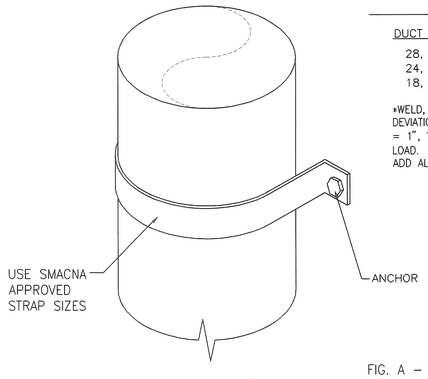

FIG. A

TABLE 4-4

DUCT GAGE	ALLOWABLE LOAD PER FASTENER*
28, 26	25 LB
24, 22, 20	35 LB
18, 16	50 LB

*WELD, BOLT OR NO. 8 SCREW (MIN.) DEVIATION PERMITTED BY OTHER ANALYSIS. X = 1", Y = 2"; ADD OTHERS TO ACCOMMODATE LOAD. MINIMUM OF 3 ON 24" WIDTH AND UP. ADD ALONG SIDES NEAREST ANCHORS

FIG. A – SUGGESTED SIZING

DUCT SIZE	BAND
< 24"	1" x 22 GA.
25" – 36"	1" x 20 GA.

F2 DUCT SUPPORT FROM WALL
SCALE: NONE

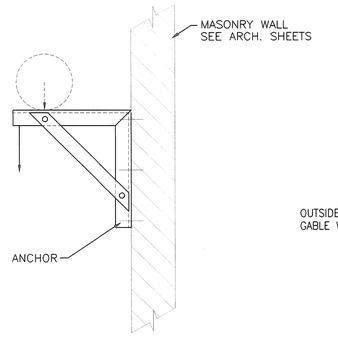

SEE KNEE BRACKET TABLES IN THE ROUND INDUSTRIAL STANDARDS

FIG. B – SUGGESTED SIZING

DUCT SIZE	ANGLE
30" x 12"	1" x 1" x 1/8"
36" x 18"	1" x 1" x 1/8"
42" x 24"	1-1/4" x 1-1/4" x 1/8"
48" x 30"	1-1/4" x 1-1/4" x 1/8"

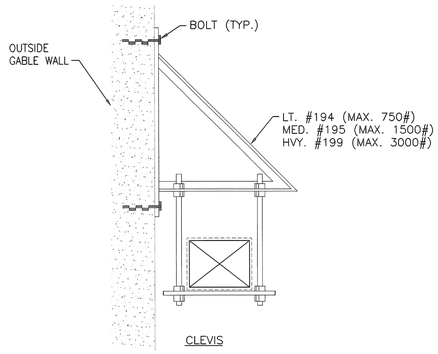

WALL BRACKET

F7 WALL MOUNT BRACKET DETAIL – DUCTWORK
SCALE: NONE

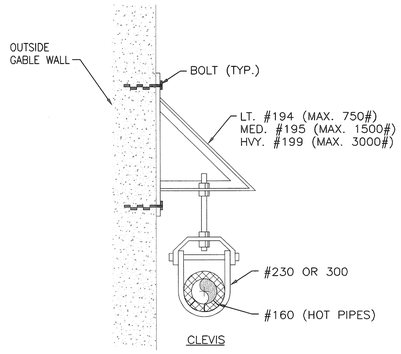

WALL BRACKET

F9 WALL MOUNT BRACKET DETAIL – PIPING
SCALE: NONE

REVISION NO.	REVISION DESCRIPTION	
Revisions		By Date

Department of Veterans Affairs
Lebanon
VA Medical Center
1700 South Lincoln Avenue
Lebanon, PA 17042

SEAL: COMMONWEALTH OF PENNSYLVANIA REGISTERED PROFESSIONAL ENGINEER ANDREA G. THOMPSON No. 050040 — 02/28/2013

Architect/Engineer Address
Harrell, Saltrick & Hopper
Design & Management Solutions for the Built Environment
8016 TOWER POINT DRIVE
CHARLOTTE, NC 28227
P 704.814.1320
F 704.321.0833
WWW.HSHPC.COM

COPYRIGHT © 2013 HARRELL, SALTRICK & HOPPER, PC
HSH PROJECT # 11064

Recommended Approvals:	
1. MEDICAL DIRECTOR	6. OPERATIONS SERVICE LINE MANAGER
2. ASSOCIATE DIRECTOR	7. INFECTION CONTROL MANAGER
3. CHIEF OF STAFF	8. SAFETY MANAGER
4. ASSOC. DIRECTOR	9. GENERAL ENGINEER
5. SERVICE LINE MGRS.	10. COTR

Drawing Title: MECHANICAL LEGEND, GENERAL NOTES AND DETAILS

BID DOCUMENTS

Project Title: FACADE CORRECTIONS BUILDING 1

Date: FEBRUARY 28, 2013

Project Number: 595-11-117

Drawn	Building Number	AutoCAD File Name	DRAWING No.
AGT			M001
Checked	Reviewed	Const. Contract No.	DWG OF

Veterans Affairs

C1 GABLE A PHOTO – INTERIOR
SCALE: NONE

C5 GABLE A PHOTO – INTERIOR
SCALE: NONE

SHEET KEYNOTES (#)

1. EXISTING GABLE WALL.
2. EXISTING PIPING; PROVIDE TEMPORARY SUPPORT FROM FLOOR DURING CONSTRUCTION.
3. EXISTING AIR DRYER: REMOVE FROM GABLE WALL AND RELOCATE AS INDICATED. EXTEND AND CONNECT COPPER TUBING TO UNIT IN NEW LOCATION. SEE ELECTRICAL DRAWINGS FOR POWER CONNECTIONS.
4. NEW LOCATION OF AIR DRYER. CONTRACTOR SHALL COORDINATE NEW LOCATION WITH OTHER TRADES PRIOR TO INSTALLATION.
5. TYPICAL ANGLE FRAME PIPE HANGER SHALL BE REMOVED DURING CONSTRUCTION, STORED AND RE-USED AFTER GABLE WALL CONSTRUCTION IS COMPLETE. PROVIDE TEMPORARY BRACING FROM THE FLOOR, FOR ALL PIPING (TYPICAL FOR ALL HANGERS).
6. PIPING SHALL BE TEMPORARILY SUPPORTED DURING GABLE WALL REMOVAL/CONSTRUCTION AND REMOVED, TYPICAL.
7. PROTECT ALL PIPING DURING CONSTRUCTION.
8. PIPING SHALL BE PROTECTED DURING GABLE CONSTRUCTION, TYPICAL.
9. REMOVE BRACES AND STORE. PROVIDE TEMPORARY SUPPORT FOR PIPING. RE-INSTALL BRACING AFTER GABLE CONSTRUCTION.
10. PROTECT EXISTING EQUIPMENT DURING GABLE CONSTRUCTION, TYPICAL.

GENERAL SHEET NOTES

A. ALL AIR SYSTEMS SHALL BE TESTED FOR AIRFLOW PRIOR TO AND AFTER THE CONSTRUCTION OF THE GABLE WALLS, THE CONTRACTOR SHALL PROVIDE A REPORT TO THE COR. THE AIRFLOW REPORT THAT INCLUDES CFM QUANTITY PRIOR TO WORK AND AFTER.

B. THE CONTRACTOR SHALL HAVE THE PERMISSION OF THE COR IN WRITING PRIOR TO THE SHUTDOWN OF ANY SYSTEM.

C. PROTECT ALL PIPING AND EQUIPMENT DURING CONSTRUCTION. ANY EQUIPMENT DAMAGED DURING CONSTRUCTION SHALL BE REPLACED AT THE CONTRACTORS EXPENSE.

D. THE FOLLOWING APPLIES TO ALL EXISTING ITEMS, WHETHER SPECIFICALLY SHOWN ON THESE DOCUMENTS OR NOT:

DETACH AND SHORE-UP IN-PLACE ALL MECHANICAL, ELECTRICAL, PLUMBING AND OTHER EXISTING ITEMS ATTACHED IN ANY WAY TO EXISTING MASONRY GABLE WALLS. REMOVE AND REUSE BRACKETS, HANGERS AND OTHER EXISTING DEVICES REQUIRED FOR REATTACHMENT OF SUCH ITEMS. DO NOT DISABLE, DISCONNECT OR OTHERWISE DISCONTINUE OR DISRUPT THE USE OF EXISTING MECHANICAL, ELECTRICAL, PLUMBING, FIRE PROTECTION AND OTHER EXISTING ITEMS. UNLESS OTHERWISE NOTED, SUCH ITEMS SHALL REMAIN IN PLACE AND IN FULL OPERATION THROUGHOUT CONSTRUCTION. WHEN SUCH ITEMS ARE LOCATED OUTBOARD OF THE TEMPORARY PARTITION OR ARE OTHERWISE EXPOSED TO WEATHER, EACH SHALL BE COVERED AND PROTECTED FROM DAMAGE AND REMAIN FULLY OPERATION WITHOUT ANY DAMAGE. ALL JOINTS IN ELECTRICAL CONDUIT SHALL BE COVERED WITH WATER-TIGHT WRAP. ALL PENETRATIONS IN CONCRETE FLOORS SHALL BE SEALED WATER-TIGHT. PROVIDE WEATHERPROOF SHEET COVERING FOR EXPOSED AND INSULATED DUCTWORK AND FOR INSULATED PIPING FOR THE TOTAL DURATION OF TIME THAT WORK IS PROCEEDING AT ADJACENT GABLE. REMOVE TEMPORARY PROTECTIVE COVERING AFTER MASONRY WORK IS COMPLETED AND APPROVED AT WORK LOCATION. REMOVE SHORING AND REATTACH MECHANICAL, ELECTRICAL, PLUMBING, FIRE PROTECTION EQUIPMENT AND OTHER EXISTING ITEMS TO NEW MASONRY USING EXISTING BRACKETS, HANGERS AND OTHER EXISTING DEVICES. WALL FASTENERS, ANCHOR BOLTS AND CLIPS SHALL BE EQUAL OR GREATER STRENGTH THAN EXISTING TO REATTACH SUCH ITEMS. FINALLY, REMOVE TEMPORARY PARTITION WHEN DIRECTED TO DO SO BY THE COR.

E. REFER TO G1002 FOR PHASING.

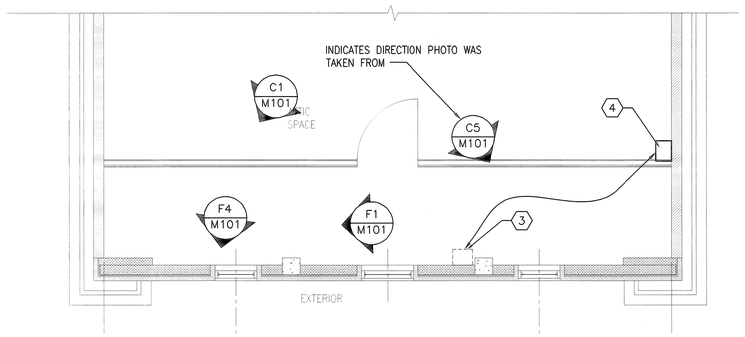

D6 GABLE A MECHANICAL PLAN
SCALE: 1/4" = 1'-0"

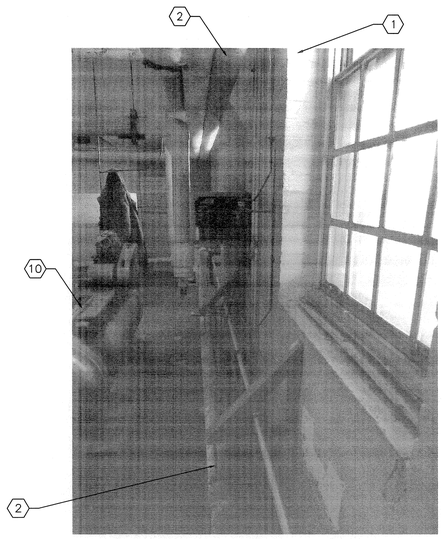

F1 GABLE A PHOTO – INTERIOR
SCALE: NONE

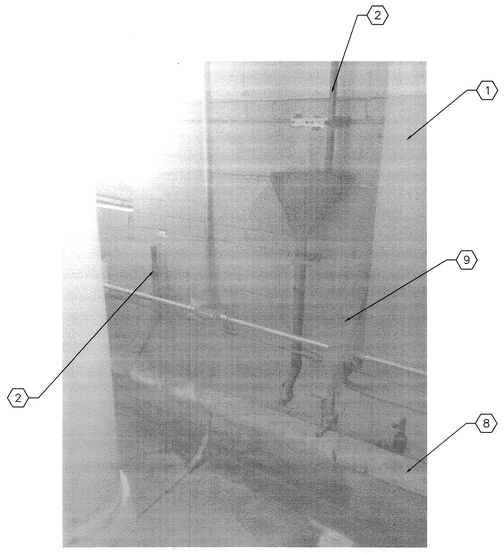

F4 GABLE A PHOTO – INTERIOR
SCALE: NONE

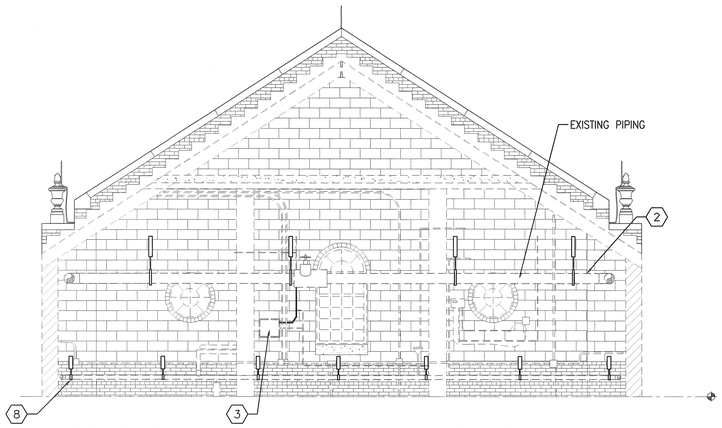

F6 GABLE A MECHANICAL INTERIOR SECTION
SCALE: 1/4" = 1'-0"

SHEET LEGEND

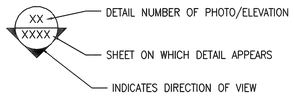

KEYPLAN

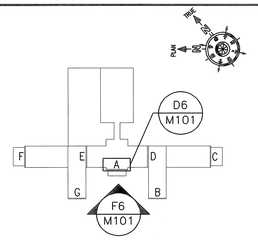

REVISION NO.	REVISION DESCRIPTION	
Revisions		By Date

Department of Veterans Affairs
Lebanon
VA Medical Center
1700 South Lincoln Avenue
Lebanon, PA 17042

SEAL: ANDREA G. THOMPSON, ENGINEER, No. 080646, COMMONWEALTH OF PENNSYLVANIA, 02/28/2013

Architect/Engineer Address
Harrell, Saltrick & Hopper
Design & Management Solutions for the Built Environment
8016 TOWER POINT DRIVE CHARLOTTE, NC 28227
P 704.814.1320 F 704.321.0833
WWW.HSHPC.COM
COPYRIGHT © 2013 HARRELL SALTRICK & HOPPER, PC
HSH PROJECT # 11064

Recommended Approvals:	
1. MEDICAL DIRECTOR	6. OPERATIONS SERVICE LINE MANAGER
2. ASSOCIATE DIRECTOR	7. INFECTION CONTROL MANAGER
3. CHIEF OF STAFF	8. SAFETY MANAGER
4. ASSOC. DIRECTOR	9. GENERAL ENGINEER
5. SERVICE LINE MGRS.	10. COTR

Drawing Title: GABLE A MECHANICAL SECTION, PHOTOS AND NOTES

Project Title: FACADE CORRECTIONS BUILDING 1

Date: FEBRUARY 28, 2013

Project Number: 595-11-117

BID DOCUMENTS

Drawn: DWS | Building Number | AutoCAD File Name

Checked | Reviewed | Const. Contract No.

DRAWING No. M101
DWG OF

Veterans Affairs

C2 GABLE B PHOTO – INTERIOR
SCALE: NONE

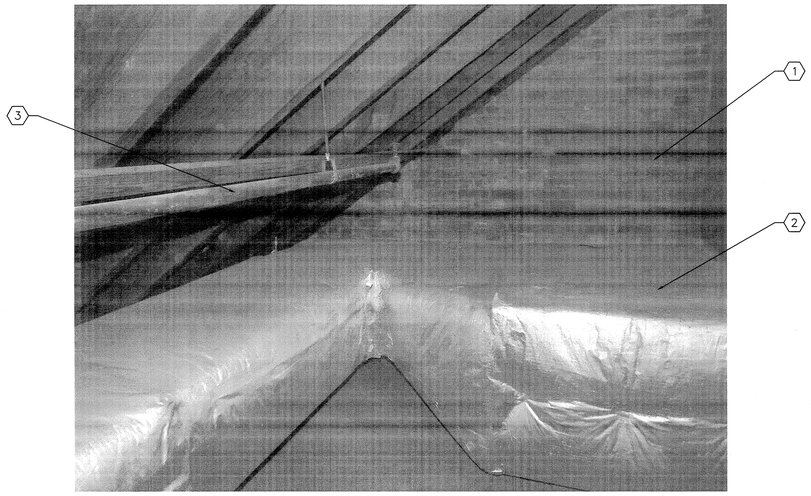

C6 GABLE B PHOTO – INTERIOR
SCALE: NONE

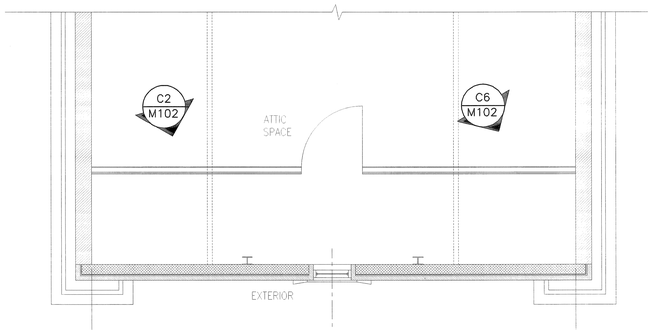

D4 GABLES B & G MECHANICAL PLAN
SCALE: 1/4" = 1'-0"

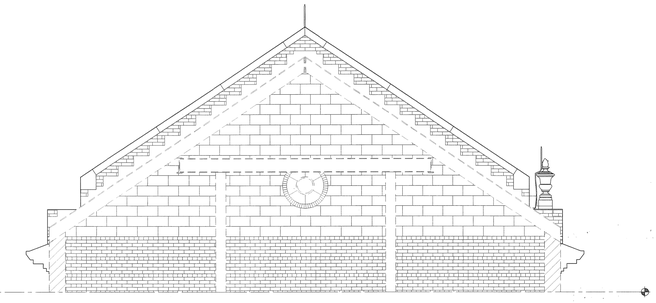

F1 GABLES B & G MECHANICAL INTERIOR SECTION
SCALE: 1/4" = 1'-0"

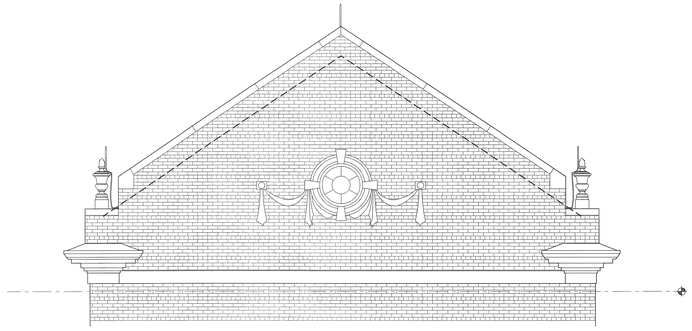

F5 GABLES B & G MECHANICAL EXTERIOR SECTION
SCALE: 1/4" = 1'-0"

GENERAL SHEET NOTES

A. THE ISOLATION ROOM SUPPLY AND EXHAUST SYSTEMS SHALL BE DE–ENERGIZED PRIOR TO CONSTRUCTION. OBTAIN PERMISSION FROM THE VAMC CONTRACTING OFFICER'S TECHNICAL REPRESENTATIVE (COR) PRIOR TO DE–ENERGIZING ANY SYSTEM, IN WRITING.

B. ALL AIR SYSTEMS SHALL BE TESTED FOR AIRFLOW PRIOR TO AND AFTER CONSTRUCTION OF THE GABLE WALLS. THE CONTRACTOR SHALL PROVIDE A REPORT TO THE COR THAT INCLUDES CFM QUANTITY PRIOR TO WORK AND AFTER.

C. THE CONTRACTOR SHALL HAVE THE PERMISSION OF THE COR IN WRITING PRIOR TO THE SHUTDOWN OF ANY SYSTEM.

D. ANY ADDITIONAL DUCTWORK FOUND BY THE MECHANICAL CONTRACTOR, PREVENTING CONSTRUCTION OF GABLE WALLS SHALL BE REMOVED AND STORED DURING CONSTRUCTION. END SHALL BE CAPPED AND INSULTED TO PREVENT CONSTRUCTION DEBRIS FROM ENTERING DUCTWORK. OBTAIN PERMISSION IN WRITING FROM THE COR PRIOR TO WORK. PROTECT ALL PIPING AND EQUIPMENT DURING CONSTRUCTION.

E. ANY EQUIPMENT DAMAGED DURING CONSTRUCTION SHALL BE REPLACED AT THE CONTRACTORS EXPENSE.

F. THE FOLLOWING APPLIES TO ALL EXISTING ITEMS, WHETHER SPECIFICALLY SHOWN ON THESE DOCUMENTS OR NOT:

DETACH AND SHORE–UP IN–PLACE ALL MECHANICAL, ELECTRICAL, PLUMBING AND OTHER EXISTING ITEMS ATTACHED IN ANY WAY TO EXISTING MASONRY GABLE WALLS. REMOVE AND REUSE BRACKETS, HANGERS AND OTHER EXISTING DEVICES REQUIRED FOR REATTACHMENT OF SUCH ITEMS. DO NOT DISABLE, DISCONNECT OR OTHERWISE DISCONTINUE OR DISRUPT THE USE OF EXISTING MECHANICAL, ELECTRICAL, PLUMBING, FIRE PROTECTION AND OTHER EXISTING ITEMS. UNLESS OTHERWISE NOTED, SUCH ITEMS SHALL REMAIN IN PLACE AND IN FULL OPERATION THROUGHOUT CONSTRUCTION. WHEN SUCH ITEMS ARE LOCATED OUTBOARD OF THE TEMPORARY PARTITION OR ARE OTHERWISE EXPOSED TO WEATHER, EACH SHALL BE COVERED AND PROTECTED FROM DAMAGE AND REMAIN FULLY OPERATION WITHOUT ANY DAMAGE. ALL JOINTS IN ELECTRICAL CONDUIT SHALL BE COVERED WITH WATER–TIGHT WRAP. ALL PENETRATIONS IN CONCRETE FLOORS SHALL BE SEALED WATER–TIGHT. PROVIDE WEATHERPROOF SHEET COVERING FOR EXPOSED AND INSULATED DUCTWORK AND FOR INSULATED PIPING FOR THE TOTAL DURATION OF TIME THAT WORK IS PROCEEDING AT ADJACENT GABLE. REMOVE TEMPORARY PROTECTIVE COVERING AFTER MASONRY WORK IS COMPLETED AND APPROVED AT WORK LOCATION. REMOVE SHORING AND REATTACH MECHANICAL, ELECTRICAL, PLUMBING, FIRE PROTECTION EQUIPMENT AND OTHER EXISTING ITEMS TO NEW MASONRY USING EXISTING BRACKETS, HANGERS AND OTHER EXISTING DEVICES. WALL FASTENERS, ANCHOR BOLTS AND CLIPS SHALL BE EQUAL OR GREATER STRENGTH THAN EXISTING TO REATTACH SUCH ITEMS. FINALLY, REMOVE TEMPORARY PARTITION WHEN DIRECTED TO DO SO BY THE COR.

G. REFER TO G1002 FOR PHASING.

SHEET KEYNOTES (#)

1. EXISTING GABLE WALL.
2. EXISTING MECHANICAL ITEMS SHALL REMAIN IN PLACE DURING CONSTRUCTION. EXISTING ITEMS SHALL BE PROTECTED FROM DAMAGE AND WEATHERPROOFED THROUGHOUT CONSTRUCTION. SEE GENERAL NOTE 1 ON ARCHITECTURAL SHEET AE106.
3. TYPICAL SPRINKLER PIPING AND HEADS. PROVIDE THERMAL PROTECTION DURING CONSTRUCTION, TO PREVENT FREEZING.

SHEET LEGEND

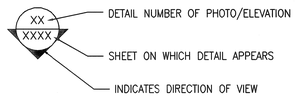

KEYPLAN

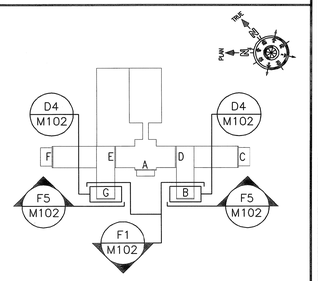

REVISION NO.	REVISION DESCRIPTION	
Revisions		By Date

Department of Veterans Affairs
Lebanon
VA Medical Center
1700 South Lincoln Avenue
Lebanon, PA 17042

SEAL

Architect/Engineer Address
Harrell, Saltrick & Hopper
Design & Management Solutions for the Built Environment
8016 TOWER POINT DRIVE
CHARLOTTE, NC 28227
P 704.814.1320
F 704.321.0833
WWW.HSHPC.COM
COPYRIGHT © 2013 HARRELL SALTRICK & HOPPER, PC
HSH PROJECT # 11064

Recommended Approvals:	
1. MEDICAL DIRECTOR	6. OPERATIONS SERVICE LINE MANAGER
2. ASSOCIATE DIRECTOR	7. INFECTION CONTROL MANAGER
3. CHIEF OF STAFF	8. SAFETY MANAGER
4. ASSOC. DIRECTOR	9. GENERAL ENGINEER
5. SERVICE LINE MGRS.	10. COTR

Drawing Title: GABLES B AND G MECHANICAL SECTIONS, PHOTOS AND NOTES

BID DOCUMENTS

Project Title: FACADE CORRECTIONS BUILDING 1

Date: FEBRUARY 28, 2013

Project Number: 595-11-117

Drawn	Building Number	AutoCAD File Name
DWS		
Checked	Reviewed	Const. Contract No.

DRAWING No. M102
DWG OF

Veterans Affairs

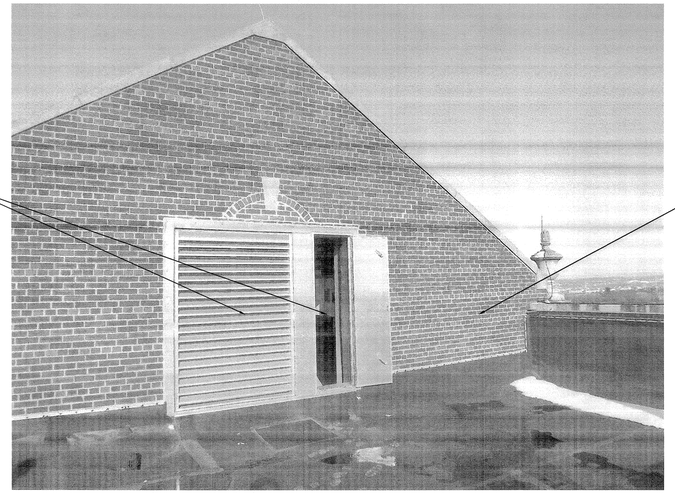

C2 GABLE C PHOTO – EXTERIOR
SCALE: NONE

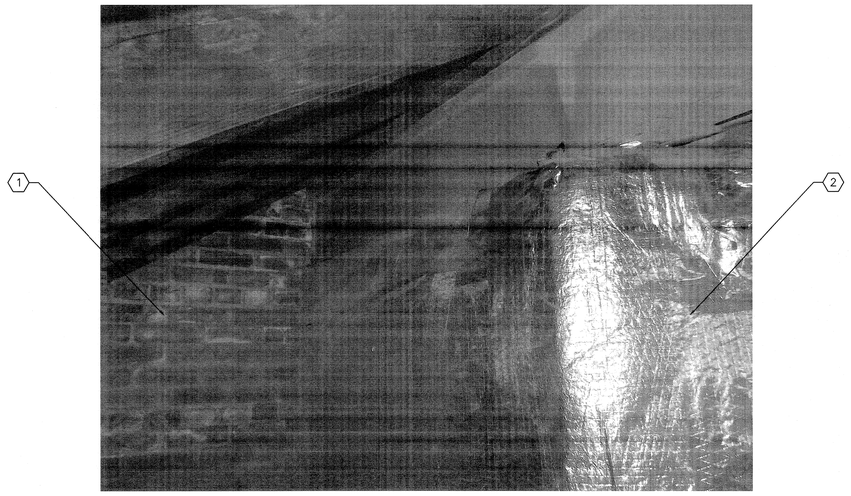

C8 GABLE C PHOTO – INTERIOR
SCALE: NONE

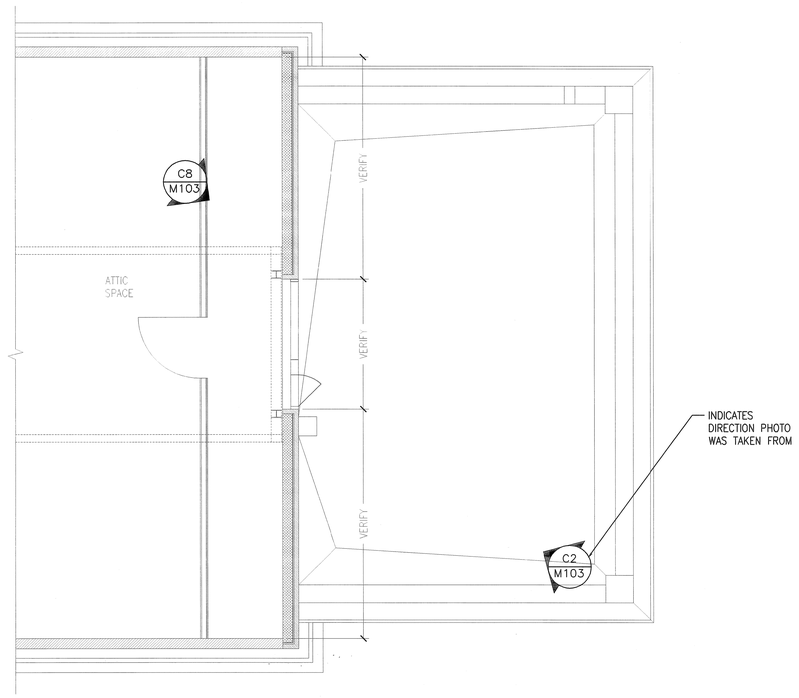

F3 GABLE C MECHANICAL PLAN
SCALE: 1/4" = 1'-0"

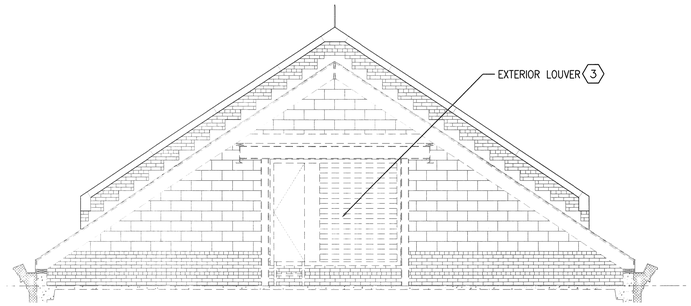

E6 GABLE C MECHANICAL INTERIOR SECTION
SCALE: 1/4" = 1'-0"

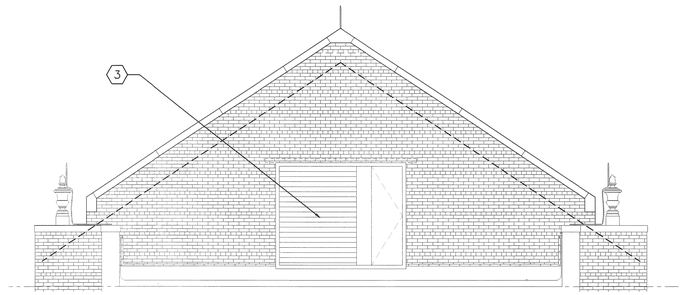

F6 GABLE C MECHANICAL EXTERIOR SECTION
SCALE: 1/4" = 1'-0"

GENERAL SHEET NOTES

A. ALL AIR SYSTEMS SHALL BE TESTED FOR AIRFLOW PRIOR TO AND AFTER CONSTRUCTION OF THE GABLE WALLS. THE CONTRACTOR SHALL PROVIDE A REPORT TO COR THAT INCLUDES CFM QUANTITY PRIOR TO AND AFTER CONSTRUCTION AND SHALL MATCH PRIOR AIRFLOW QUANTITIES.

B. THE CONTRACTOR SHALL HAVE THE PERMISSION OF THE COR IN WRITING PRIOR TO THE SHUTDOWN OF ANY SYSTEM.

C. ANY ADDITIONAL DUCTWORK FOUND BY THE MECHANICAL CONTRACTOR, PREVENTING CONSTRUCTION OF GABLE WALLS SHALL REMAIN OPERATIONAL DURING CONSTRUCTION. OBTAIN PERMISSION IN WRITING FROM THE COR TO REROUTE SUCH DUCTWORK TEMPORARILY PRIOR TO BEGINNING WORK.

D. ANY EQUIPMENT DAMAGED DURING CONSTRUCTION SHALL BE REPLACED AT THE CONTRACTORS EXPENSE.

E. THE ISOLATION ROOM SUPPLY AND EXHAUST SYSTEMS SHALL BE DE-ENERGIZED PRIOR TO CONSTRUCTION. OBTAIN PERMISSION FROM THE VAMC CONTRACTING OFFICER'S REPRESENTATIVE (COR) PRIOR TO DE-ENERGIZING ANY SYSTEM, IN WRITING.

F. THE FOLLOWING APPLIES TO ALL EXISTING ITEMS, WHETHER SPECIFICALLY SHOWN ON THESE DOCUMENTS OR NOT:

DETACH AND SHORE-UP IN-PLACE ALL MECHANICAL, ELECTRICAL, PLUMBING AND OTHER EXISTING ITEMS ATTACHED IN ANY WAY TO EXISTING MASONRY GABLE WALLS. REMOVE AND REUSE BRACKETS, HANGERS AND OTHER EXISTING DEVICES REQUIRED FOR REATTACHMENT OF SUCH ITEMS. DO NOT DISABLE, DISCONNECT OR OTHERWISE DISCONTINUE OR DISRUPT THE USE OF EXISTING MECHANICAL, ELECTRICAL, PLUMBING, FIRE PROTECTION AND OTHER EXISTING ITEMS. UNLESS OTHERWISE NOTED, SUCH ITEMS SHALL REMAIN IN PLACE AND IN FULL OPERATION THROUGHOUT CONSTRUCTION. WHEN SUCH ITEMS ARE LOCATED OUTBOARD OF THE TEMPORARY PARTITION OR ARE OTHERWISE EXPOSED TO WEATHER, EACH SHALL BE COVERED AND PROTECTED FROM DAMAGE AND REMAIN FULLY OPERATION WITHOUT ANY DAMAGE. ALL JOINTS IN ELECTRICAL CONDUIT SHALL BE COVERED WITH WATER-TIGHT WRAP. ALL PENETRATIONS IN CONCRETE FLOORS SHALL BE SEALED WATER-TIGHT. PROVIDE WEATHERPROOF SHEET COVERING FOR EXPOSED AND INSULATED DUCTWORK AND FOR INSULATED PIPING FOR THE TOTAL DURATION OF TIME THAT WORK IS PROCEEDING AT ADJACENT GABLE. REMOVE TEMPORARY PROTECTIVE COVERING AFTER MASONRY WORK IS COMPLETED AND APPROVED AT WORK LOCATION. REMOVE SHORING AND REATTACH MECHANICAL, ELECTRICAL, PLUMBING, FIRE PROTECTION EQUIPMENT AND OTHER EXISTING ITEMS TO NEW MASONRY USING EXISTING BRACKETS, HANGERS AND OTHER EXISTING DEVICES. WALL FASTENERS, ANCHOR BOLTS AND CLIPS SHALL BE EQUAL OR GREATER STRENGTH THAN EXISTING TO REATTACH SUCH ITEMS. FINALLY, REMOVE TEMPORARY PARTITION WHEN DIRECTED TO DO SO BY THE COR.

G. REFER TO GI102 FOR PHASING

SHEET KEYNOTES (#)

1. EXISTING GABLE WALL.
2. EXISTING MECHANICAL ITEMS SHALL REMAIN IN PLACE DURING CONSTRUCTION. EXISTING ITEMS SHALL BE PROTECTED FROM DAMAGE AND WEATHERPROOFED THROUGHOUT CONSTRUCTION. SEE GENERAL NOTE 1 ON ARCHITECTURAL SHEET AE106.
3. EXISTING LOUVER AND DOOR. SEE ARCHITECTURAL FOR EXTENT OF WORK. LOUVER SHALL BE REINSTALLED AFTER CONSTRUCTION.

SHEET LEGEND

XX / XXXX — DETAIL NUMBER OF PHOTO/ELEVATION
— SHEET ON WHICH DETAIL APPEARS
— INDICATES DIRECTION OF VIEW

KEYPLAN

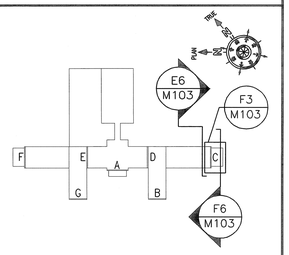

REVISION NO.	REVISION DESCRIPTION	
Revisions		By Date

Department of Veterans Affairs
Lebanon
VA Medical Center
1700 South Lincoln Avenue
Lebanon, PA 17042

SEAL: COMMONWEALTH OF PENNSYLVANIA REGISTERED PROFESSIONAL ENGINEER ANDREA G. THOMPSON No. 035246 — 02/28/2013

Architect/Engineer Address
Harrell, Saltrick & Hopper
Design & Management Solutions for the Built Environment
8016 TOWER POINT DRIVE
CHARLOTTE, NC 28227
P 704.814.1320
F 704.321.0833
WWW.HSHPC.COM
COPYRIGHT © 2013 HARRELL SALTRICK & HOPPER, PC
HSH PROJECT # 11064

Recommended Approvals:	
1. MEDICAL DIRECTOR	6. OPERATIONS SERVICE LINE MANAGER
2. ASSOCIATE DIRECTOR	7. INFECTION CONTROL MANAGER
3. CHIEF OF STAFF	8. SAFETY MANAGER
4. ASSOC. DIRECTOR	9. GENERAL ENGINEER
5. SERVICE LINE MGRS.	10. COTR

Drawing Title: GABLE C MECHANICAL SECTIONS, PHOTOS AND NOTES

Project Title: FACADE CORRECTIONS BUILDING 1

Date: FEBRUARY 28, 2013

Project Number: 595-11-117

BID DOCUMENTS

Drawn	Building Number	AutoCAD File Name	DRAWING No.
DWS			M103
Checked	Reviewed	Const. Contract No.	DWG OF

Veterans Affairs