DEPARTMENT OF VETERANS AFFAIRS

WILLIAM S. MIDDLETON VA HOSPITAL 2500 OVERLOOK TERRACE MADISON, WISCONSIN 53705

CONSTRUCT PHARMACY CACHE

VA PROJECT NUMBER 607-13-101
IDG PROJECT NUMBER 121002

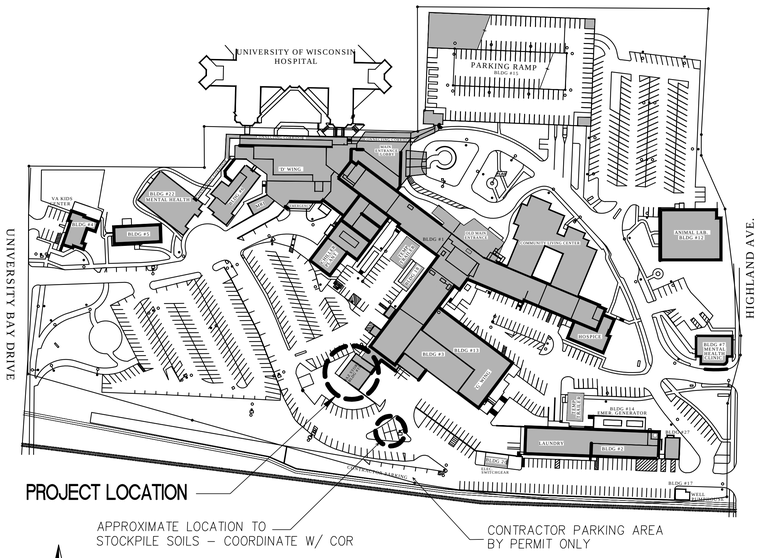

N
NTS

VA Site Map

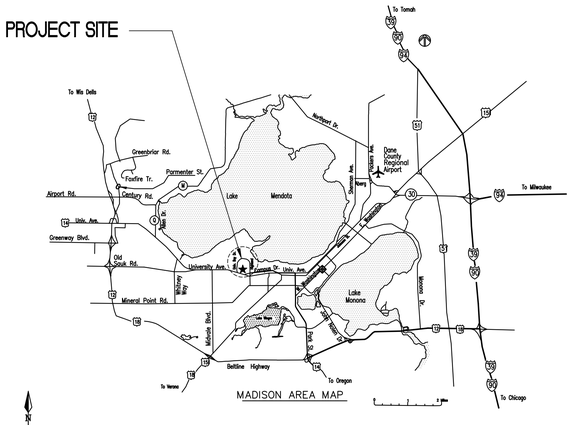

N
NTS

Vicinity Map

ARCHITECTURAL SYMBOLS

- CENTER LINE
- ELEVATION INDICATOR
- CENTER LINE INDICATOR
- CONTRACT LIMIT LINE
- DEMOLITION LINE
- EXISTING TO REMAIN LINE
- FEATURES ABOVE LINE INDICATOR
- FIRE RESISTIVE RATED LINE, 1 HOUR
- FIRE RESISTIVE RATED LINE, 2 HOUR
- FIRE RESISTIVE RATED LINE, 3 HOUR
- FIRE RESISTIVE RATED LINE, 4 HOUR
- FIRE–RATED, SMOKE BARRIER LINE, 1 HOUR
- FIRE–RATED, SMOKE BARRIER LINE, 2 HOUR
- FIRE–RATED, SMOKE BARRIER LINE, 3 HOUR
- FIRE–RATED, SMOKE BARRIER LINE, 4 HOUR
- HIDDEN FEATURES LINE
- NEW LINE
- PROPERTY LINE
- SMOKE BARRIER LINE
- BREAK, ROUND (USER DEFINES SIZE)
- BREAK, STRAIGHT (SEE SECTION INDICATORS, BUILDING, WITH BREAK STANDARDS)
- COLUMN GRID
- KEYNOTE
- WALL OR PARTITION TYPE
- NORTH ARROW
- DETAIL INDICATOR
- DETAIL INDICATOR
- DETAIL INDICATOR FOR SMALL CONDITIONS
- DIMENSION LINE
- DOOR OPENING/BORROWED LIGHT IDENTIFIER
- DRAWING BLOCK TITLE, TYPICAL
- ELEVATION INDICATOR, EXTERIOR
- ELEVATION INDICATOR, INTERIOR, MULTIPLE VIEW
- ELEVATION INDICATOR, INTERIOR, SINGLE VIEW
- BUILDING SECTION INDICATOR
- GRAPHIC SCALE
- DETAIL INDICATOR
- FURNITURE, FIXTURE, & EQUIPMENT INDICATOR
- GRAPHIC SCALE, 1/8"=1'–0"
- ROOM NAME AND NUMBER
- FIRE EXTINGUISHER CABINET
- CORNER GUARD
- V V ITEM – VA SUPPLIED & INSTALLED
- VC ITEM – VA SUPPLIED & CONTRACTOR INSTALLED
- CC ITEM – CONTRACTOR SUPPLIED & INSTALLED

MATERIALS LEGEND

- CONCRETE
- EARTH
- BASE COURSE
- EXISTING CONSTRUCTION TO REMAIN
- EXISTING CONSTRUCTION TO BE REMOVED
- NEW CONSTRUCTION
- RIGID INSULATION
- BATT INSULATION

FIRE RATINGS	IN HOURS
BEARING WALLS & COLUMNS	3
TRUSSES, GIRDERS, BEAMS	3
FLOOR CONSTRUCTION	2
ROOF CONSTRUCTION	2
SHAFTS	2

AREA SQUARE FOOTAGE	RENOVATION AREA
GROUND FLOOR	1783 SF

BUILDING INFORMATION

1BC, NFPA 101: LATEST ADDITION
OCCUPANCY: IBC S–1 MODERATE HAZARD STORAGE
CLASS OF CONSTRUCTION: IBC 2B NON–COMBUSTIBLE (CONSTRUCTED AS 1A)
BUILDING FULLY SPRINKLERED

SHEET INDEX

G100	COVER SHEET / ABBREVIATIONS AND SYMBOLS
G101	LIFE SAFETY PLAN
H100	ASBESTOS ABATEMENT PLAN – GROUND FLOOR
C100	EXISTING SITE AND EROSION CONTROL PLAN
C200	DEMOLITION PLAN
C300	SITE LAYOUT AND GRADING PLAN
C900	SITE CONSTRUCTION DETAILS
A100	GROUND FLOOR PLAN – DEMOLITION AND NOTES
A110	EXISTING EXTERIOR ELEVATIONS – DEMOLITION AND NOTES
A111	BUILDING SECTIONS – DEMOLITION AND NOTES
A200	GROUND FLOOR PLAN – RENOVATION AND NOTES
A201	ROOF PLAN – RENOVATION AND NOTES
A400	NEW EXTERIOR ELEVATIONS – RENOVATION AND NOTES
A500	BUILDING SECTIONS – RENOVATION AND NOTES
A501	EXTERIOR WALL SECTIONS
A600	SECTION DETAILS
A601	PLAN DETAILS AND WALL TYPES
S001	GENERAL NOTES
S100	FOUNDATION AND FRAMING PLANS
S500	FOUNDATION DETAILS
S505	MASONRY DETAILS
S510	STEEL DETAILS
S511	STEEL DETAILS
P001	PLUMBING PLANS, GENERAL NOTES, LEGENDS AND SCHEDULES
M001	MECHANICAL GENERAL NOTES, LEGENDS, CONTROL DIAGRAM AND POINTS.
M002	MECHANICAL SCHEDULES, ROOF PLAN AND COMMUNICATIONS WIRING PLAN
M100	MECHANICAL PLANS
M200	MECHANICAL DETAILS
M201	MECHANICAL DETAILS
E001	ELECTRICAL GENERAL NOTES, LEGENDS, AND SCHEDULES
E100	ELECTRICAL PANEL LOCATIONS AND DEMO PLANS
E101	ELECTRICAL LIGHTING, POWER, AND SYSTEMS PLANS
E200	ELECTRICAL SCHEDULES

PROJECT INFORMATION				
NAME OF PROJECT:	MIDDLETON VA HOSPITAL - PHARMACY CACHE			
ADDRESS:	2500 OVERLOOK TERRACE MADISON, WISCONSIN 53705			
PROPOSED USE:	STORAGE, PHARMACY CACHE			
OWNER OR AUTHORIZED AGENT:	DEPARTMENT OF VETERANS AFFAIRS			
OWNED BY:	FEDERAL			
CODE ENFORCEMENT JURISDICTION:	VA			
DESIGN RESPONSIBILITY				
DISCIPLINE	FIRM	NAME	LICENSE NUMBER	TELEPHONE
ARCHITECTURAL	NAGEL ARCHITECTS	GREG NAGEL	A-9635	262-641-0746
INTERIOR DESIGN				
CIVIL	GRAEF	EDWARD PREMO	E-41079	608-242-1550
STRUCTURAL	GRAEF	BRYANT STEMPSKI	E-37299	608-242-1550
PLUMBING	IBC ENGINEERING	LEV ZVENYACH	E-25627	262-649-1190
MECHANICAL	IBC ENGINEERING	LEV ZVENYACH	E-25627	262-649-1190
ELECTRICAL	IBC ENGINEERING	LEV ZVENYACH	E-25627	262-649-1190
OTHER				

Approved: Chief of Construction, FM

Approved: VA Project Engineer

Approved: Office Manager

Approved: Architect / Engineer

100% CONSTRUCTION DOCUMENTS

Revisions:	Date

CONSULTANTS:

ARCHITECT/ENGINEERS:

13100 watertown plank road
suite 200
elm grove, wi 53122

p 262.641.0746
f 888.600.6207

nagel architects

IBC ENGINEERING SERVICES INC.
N8 W22195 JOHNSON DR., STE 150 WAUKESHA, WI 53186
p 262.549.1190 fx 262.549.1620

Drawing Title: COVER SHEET ABBREVIATIONS AND SYMBOLS

Approved: Project Director

Project Title: Middleton VAH Construct Pharmacy Cache

Location: Madison, WI

Date: May 13, 2013 | Checked: SAM | Drawn: SAS

Project Number: 607-13-101

Building Number: 19

Drawing Number: G100

Office of Construction and Facilities Management

Department of Veterans Affairs

VA FORM 08–6231

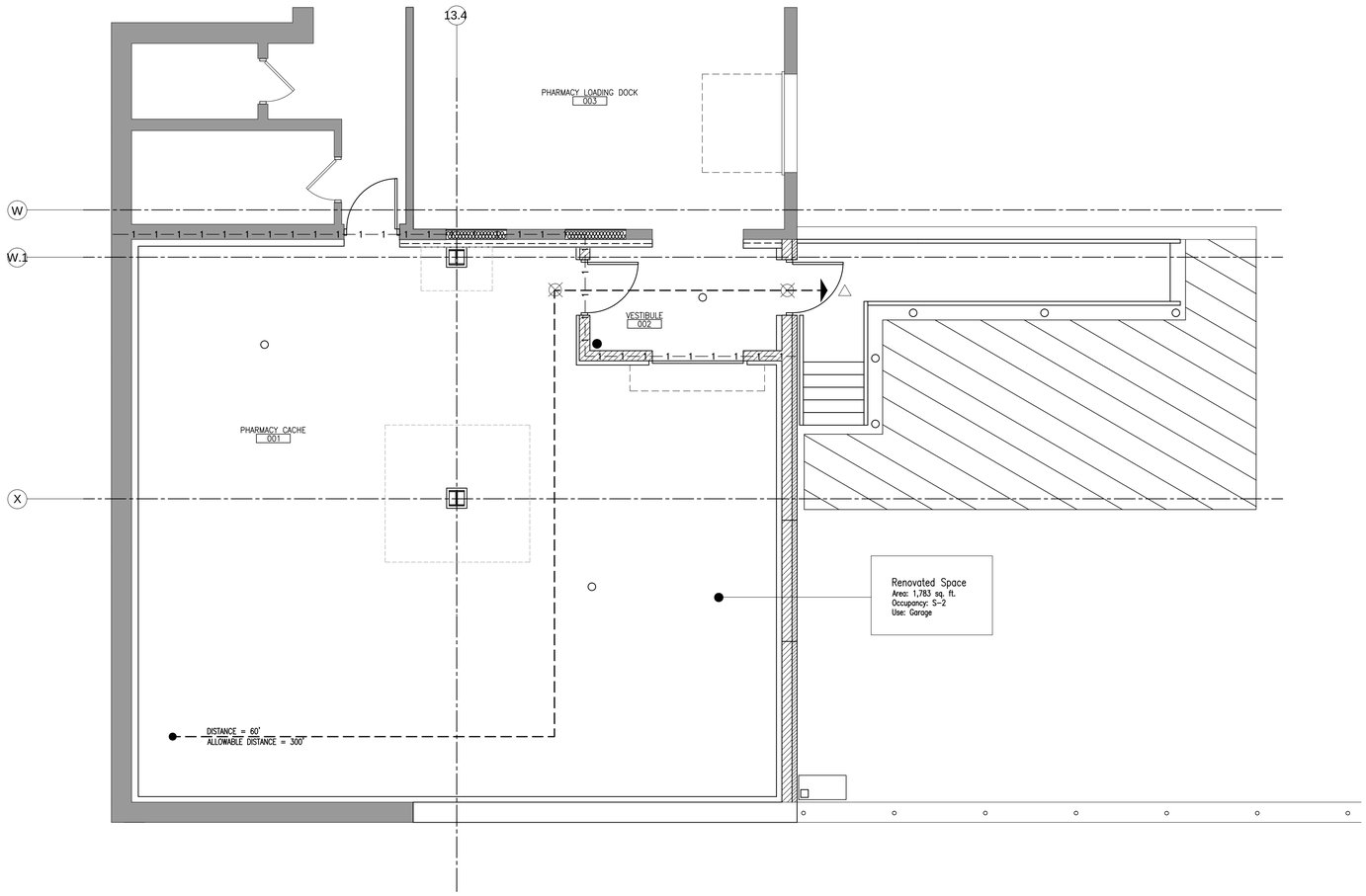

F1 LIFE SAFETY PLAN

1/4" = 1'-0"

PLAN NORTH

GENERAL NOTES:

1. EXISTING BUILDING PLANS HAVE BEEN SHOWN ACCORDING TO ORIGINAL BUILDING PLANS AND FIELD NOTES AND MEASUREMENTS. EXISTING CONDITIONS AND DIMENSIONS SHALL BE FIELD VERIFIED BY CONTRACTORS AND DISCREPANCIES REPORTED TO THE ARCHITECT PRIOR TO FRAMING.

2. EXISTING WALLS, PARTITIONS, FLOOR LINES AND DOORS AND FRAMES THAT REMAIN ARE SHOWN IN CONTINUOUS LINE WEIGHT. THESE AND EXISTING FLOOR AND WALL FINISHES THAT ARE SCHEDULED TO REMAIN SHALL BE PROTECTED FROM DAMAGE DURING DEMOLITION AND CONSTRUCTION. ANY SUCH EXISTING CONDITIONS WHICH ARE DAMAGED OR BECOME UNSTABLE DUE TO OTHER DEMOLITION SHALL BE REPLACED AT NO COST TO OWNER WITH NEW CONSTRUCTION TO MATCH.

3. GC SHALL PROVIDE AND MAINTAIN APPROPRIATE BARRICADES AND SAFETY MEASURES IN AREAS OF CONSTRUCTION AT ALL TIMES.

4. ALL CUTTING AND PATCHING SHALL BE THE RESPONSIBILITY OF EACH SUBCONTRACTOR UNLESS OTHERWISE STIPULATED BY OR ARRANGED WITH THE GC.

5. ALL EXISTING WALLS, PATCH FLUSH TO REPAIR EXISTING HOLES, DAMAGED AREAS AND WHERE WALLS WERE PREVIOUSLY REMOVED, OR UTILITY MODIFICATIONS WERE PERFORMED. PROVIDE NEW FINISHES PER SCHEDULE.

6. PROVIDE GYPSUM BOARD CONTROL JOINTS AT ALL LOCATIONS WHERE NEW WALL SURFACE MEETS EXISTING TO REMAIN.

7. ALL DIMENSIONS ARE TO FACE OF STUD AT NEW WALL CONSTRUCTION OR FACE OF EXISTING WALL SURFACE TO REMAIN UNLESS NOTED OTHERWISE.

8. ALL DIMENSIONS NOTED TO BE BE VERIFIED SHALL BE VERIFIED ON SITE BY THE CONTRACTOR AND REPORTED TO THE ARCHITECT FOR CONFIRMATION PRIOR TO FRAMING OF WALLS.

9. DIMENSIONS NOTED AS CLEAR OR CL'R ARE FINAL FINISHED WALL SURFACE TO FINAL FINISHED WALL SURFACE, SEE FINISH SCHEDULE AND VERIFY FINAL FINISH OF WALL PRIOR TO FRAMING.

LIFE SAFETY LEGEND:

—1—1—1—1—1—	FIRE RESISTIVE RATED LINE, 1 HOUR
—2—2—2—2—2—	FIRE RESISTIVE RATED LINE, 2 HOUR
—3—3—3—3—3—	FIRE RESISTIVE RATED LINE, 3 HOUR
—4—4—4—4—4—	FIRE RESISTIVE RATED LINE, 4 HOUR
—1s—1s—1s—1s—	FIRE-RATED, SMOKE BARRIER LINE, 1 HOUR
—2S—2S—2S—	FIRE-RATED, SMOKE BARRIER LINE, 2 HOUR
—3S—3S—3S—	FIRE-RATED, SMOKE BARRIER LINE, 3 HOUR
—4S—4S—4S—	FIRE-RATED, SMOKE BARRIER LINE, 4 HOUR
●	FIRE EXTINGUISHER
	EGRESS CORRIDOR
⊗	EXIT SIGN
△	EXTERIOR EGRESS

100% CONSTRUCTION DOCUMENTS

Revisions:	Date

CONSULTANTS:

ARCHITECT/ENGINEERS:

13100 watertown plank road
suite 200
elm grove, wi 53122

p 262.641.0746
f 888.600.6207

nagel architects

IBC ENGINEERING SERVICES INC.
N8 W22195 JOHNSON DR, STE 120
WAUKESHA, WI 53186
p 262.549.1190
fx 262.549.1620

Drawing Title: LIFE SAFETY FLOOR PLAN

Approved Project Director:

Project Title: Middleton VAH Construct Pharmacy Cache

Location: Madison, WI

Date: May 13, 2013

Checked: AW

Drawn: AJS

Project Number: 607-13-101

Building Number: 19

Drawing Number: G101

Office of Construction and Facilities Management

Department of Veterans Affairs

VA FORM 08-6231

GENERAL NOTES

1. DASHED LINES INDICATE DEMOLITION BY GC. FOR REFERENCES ONLY.

PLAN NOTES

1. REMOVE DOOR FRAME WITH ASBESTOS CONTAINING (AC) CAULK/SEALANT. REMOVE ALL RESIDUAL CAULK FROM OPENING.
2. REMOVE DUCT INSULATION WITH ASBESTOS CONTAINING MASTIC ON PAPER.

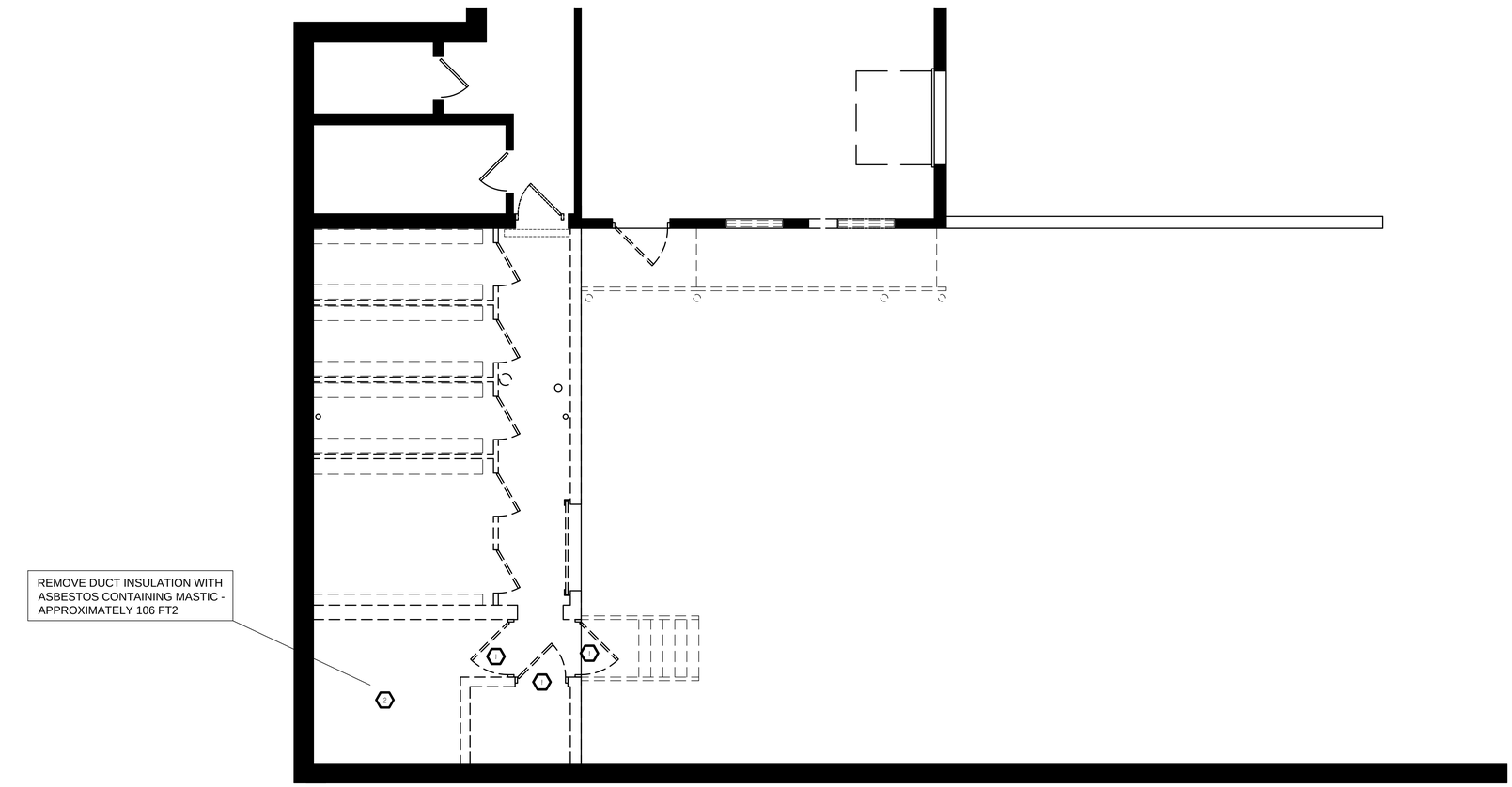

1 ASBESTOS ABATEMENT PLAN - GROUND FLOOR
SCALE: 1/4" = 1'

100% CONSTRUCTION DOCUMENTS

Revisions:	Date

CONSULTANTS:

EMC Environmental Management Consulting, Inc.
W7748 HWY V
LAKE MILLS, WI 53551
PHONE: (920) 648-6343
FAX: (920) 648-4370

ARCHITECT/ENGINEERS:

13100 watertown plank road
suite 200
elm grove, wi 53122
p 262.641.0746
f 888.600.6207

nagel architects

IBC ENGINEERING SERVICES INC.
N8 W22195 JOHNSON DR, STE 100
WAUKESHA, WI 53186
262.549.1190
fx 262.549.1620

Drawing Title: ASBESTOS ABATEMENT PLAN - GROUND FLOOR	Project Title: Middleton VAH Pharmacy Cache	Project Number: 607-13-101	Office of Construction and Facilities Management
Approved: Project Director	Location: Madison, WI	Building Number: 19	
	Date: May 13, 2013 / Checked: SAM / Drawn: SAS	Drawing Number: H100	Department of Veterans Affairs

VA FORM 08-6231

GENERAL NOTES

1. THE UNDERGROUND UTILITIES SHOWN HAVE BEEN LOCATED FROM FIELD SURVEY INFORMATION AND EXISTING DRAWINGS. THE SURVEYOR MAKES NO GUARANTEES THAT THE UNDERGROUND UTILITIES SHOWN COMPRISE ALL SUCH UTILITIES IN THE AREA, EITHER IN SERVICE OR ABANDONED. THE SURVEYOR FURTHER DOES NOT WARRANT THAT THE UNDERGROUND UTILITIES SHOWN ARE IN THE EXACT LOCATION INDICATED ALTHOUGH HE DOES CERTIFY THAT THEY ARE LOCATED AS ACCURATELY AS POSSIBLE FROM INFORMATION AVAILABLE. THE SURVEYOR HAS NOT PHYSICALLY LOCATED THE UNDERGROUND UTILITIES.

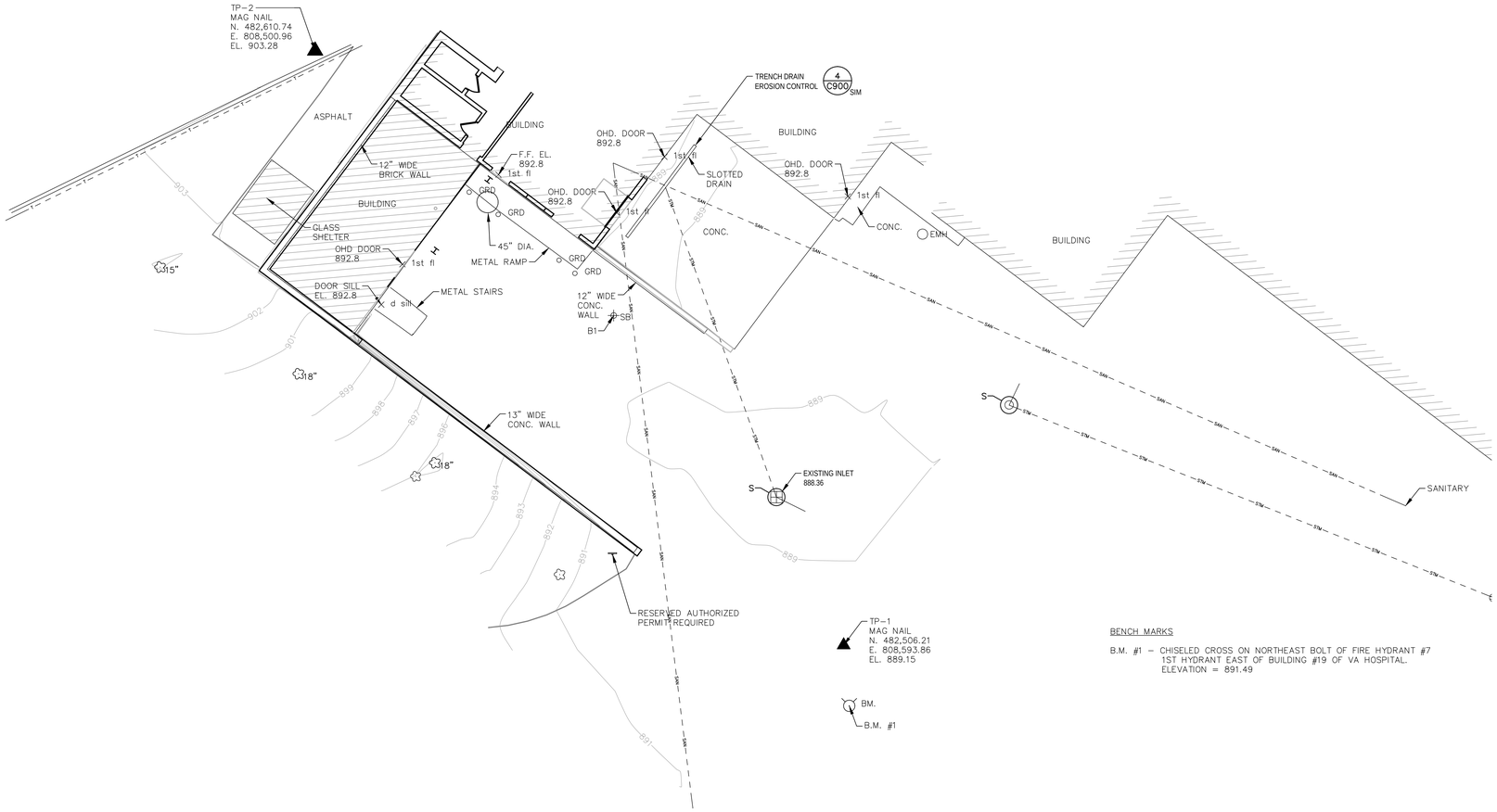

BENCH MARKS

B.M. #1 – CHISELED CROSS ON NORTHEAST BOLT OF FIRE HYDRANT #7
1ST HYDRANT EAST OF BUILDING #19 OF VA HOSPITAL.
ELEVATION = 891.49

SURVEY LEGEND

- EXISTING DECIDUOUS TREE
- EXISTING MAJOR CONTOUR
- EXISTING MINOR CONTOUR
- EXISTING BURIED COMMUNICATIONS
- EXISTING BURIED ELECTRIC
- EXISTING BURIED STEAM
- EXISTING CWS/CWR

GENERAL NOTES

1. UNDERGROUND UTILITIES HAVE BEEN SHOWN TO A REASONABLE DEGREE OF ACCURACY AND IT SHALL BE THE CONTRACTOR'S RESPONSIBILITY TO VERIFY THE EXACT LOCATION OF ALL UNDERGROUND UTILITIES.

EROSION CONTROL LEGEND

- SILT FENCE, SEE 2/C-900
- INLET PROTECTION, SEE 1/C-900

CONTROL POINTS

#	NORTHING	EASTING	ELEV.	DESCRIPTION
TP-1	482,506.21	808,593.86	889.15	MAG NAIL

REMOVAL NOTES

1. EXISTING CONDITIONS SHALL BE FIELD VERIFIED BY THE CONTRACTOR AND DISCREPANCIES REPORTED TO THE ENGINEER PRIOR TO STARTING WORK.
2. CONTRACTOR IS RESPONSIBLE FOR SECURING THE JOB SITE TO PROTECT THE PUBLIC. COORDINATE WITH VA.
3. IF REQUIRED, VA WILL REMOVE ALL PLANTINGS IN AREAS OF EXCAVATION UNLESS OTHERWISE NOTED. COORDINATE AT LEAST 2 WEEKS PRIOR TO CONSTRUCTION ACTIVITIES IN THESE AREAS TO COORDINATE WHAT REMOVALS ARE NEEDED TO PERFORM THE WORK.

EROSION CONTROL NOTES

1. CONSTRUCTION SITE EROSION CONTROL AND SEDIMENTATION CONTROL SHALL COMPLY WITH THE REQUIREMENTS OF DANE COUNTY, CITY OF MADISON, AND THE WISCONSIN DEPARTMENT OF NATURAL RESOURCES (WDNR) "CONSTRUCTION SITE EROSION AND SEDIMENT CONTROL TECHNICAL STANDARDS".

2. ALL EROSION CONTROL MEASURES SHALL BE ADJUSTED TO MEET FIELD CONDITIONS AT THE TIME OF CONSTRUCTION AND SHALL BE INSTALLED PRIOR TO ANY GRADING OR DISTURBANCE OF EXISTING SURFACE MATERIAL ON SITE.

3. ALL EROSION AND SEDIMENT CONTROL MEASURES WILL BE CHECKED FOR STABILITY AND OPERATION AFTER A RAINFALL OF 0.5 INCHES OR MORE, BUT NO LESS THAN ONCE EVERY WEEK. MAINTENANCE OF ALL EROSION CONTROL STRUCTURES SHALL BE PROVIDED TO INSURE INTENDED PURPOSE IS ACCOMPLISHED. CONTRACTOR SHALL BE RESPONSIBLE FOR CLEANUP AND REMOVAL OF ALL SEDIMENT WHEN LEAVING PROPERTY. EROSION CONTROL MEASURES MUST BE IN WORKING CONDITION AT END OF EACH WORK DAY.

4. SILT FENCE SHALL BE INSTALLED IN THE LOCATIONS SHOWN ON THE CONSTRUCTION PLANS OR AS OTHERWISE COORDINATED BETWEEN VA AND ENGINEER. SEDIMENT DEPOSITS WILL BE REMOVED FROM BEHIND THE SILT FENCE WHEN DEPOSITS REACH A DEPTH OF 6 INCHES. THE SILT FENCE WILL BE REPAIRED OR REPLACED AS NECESSARY TO MAINTAIN A BARRIER.

5. FILTER FABRIC SHALL BE INSTALLED BENEATH INLET COVERS TO TRAP SEDIMENT AS PER INLET PROTECTION DETAIL IN THE LOCATIONS SHOWN ON THE CONSTRUCTION PLANS OR AS OTHERWISE COORDINATED BETWEEN VA AND ENGINEER.

6. EROSION CONTROL MEASURES SHALL BE MAINTAINED ON A CONTINUING BASIS UNTIL SITE IS FULLY STABILIZED.

7. PERIODIC STREET SWEEPING WILL BE COMPLETED BY THE CONTRACTOR TO MAINTAIN THE PUBLIC STREET FREE OF DUST AND DIRT.

8. SILT FENCE SHALL BE INSTALLED IN HORSESHOE FASHION AROUND ALL TOPSOIL AND FILL STOCKPILES.

9. REMOVE EROSION CONTROL MEASURES ONLY WHEN SITE IS FULLY STABILIZED.

10. SITE DEWATERING. WATER PUMPED FROM THE SITE SHALL BE TREATED BY SEDIMENT BASINS OR OTHER APPROPRIATE BEST MANAGEMENT PRACTICES SPECIFIED BY THE WDNR TECHNICAL STANDARDS. WATER SHALL NOT BE DISCHARGED IN A MANNER THAT CAUSES EROSION OF THE SITE, ADJACENT SITES, OR RECEIVING CHANNELS.

11. WASTE AND MATERIAL DISPOSAL. ALL WASTE AND UNUSED BUILDING MATERIALS (INCLUDING GARBAGE, DEBRIS, CLEANING WASTES, WASTEWATER, TOXIC MATERIALS, OR HAZARDOUS MATERIALS) SHALL BE PROPERLY DISPOSED IN ACCORDANCE WITH LANDFILL TIPPING FEE AND RECYCLING REQUIREMENTS AND NOT ALLOWED TO BE CARRIED OFF-SITE BY RUNOFF OR WIND.

12. TRACKING. ANY SEDIMENT REACHING A PUBLIC OR PRIVATE ROAD SHALL BE REMOVED BY STREET CLEANING, TO THE SATISFACTION OF THE VA BEFORE THE END OF EACH WORKDAY.

13. SEDIMENT CLEANUP. ALL OFF-SITE SEDIMENT DEPOSITS OCCURRING AS A RESULT OF A STORM EVENT SHALL BE CLEANED UP BY THE END OF THE NEXT WORK DAY. ALL OTHER OFF-SITE SEDIMENT DEPOSITS OCCURRING AS A RESULT OF CONSTRUCTION ACTIVITIES SHALL BE CLEANED UP BY THE END OF THE WORK DAY.

14. ALL DISTURBED GROUND LEFT INACTIVE FOR SEVEN OR MORE DAYS SHALL BE STABILIZED BY TEMPORARY OR PERMANENT SEEDING OR EQUIVALENT BEST MANAGEMENT PRACTICES.

15. SOIL OR DIRT STORAGE PILES SHALL BE LOCATED A MINIMUM OF 30 FEET FROM ANY DOWNSLOPE ROAD, LAKE, STREAM, WETLAND, OR DRAINAGE CHANNEL. STRAW BALE OR FILTER FABRIC FENCES SHALL BE PLACED ON THE DOWN SLOPE SIDE OF THE PILES. IF REMAINING FOR MORE THAN THIRTY DAYS, PILES SHALL BE STABILIZED BY MULCHING, VEGETATIVE COVER, TARPS OR OTHER MEANS.

16. REPAIR ANY SILTATION OR EROSION DAMAGE TO ADJOINING SURFACES AND DRAINAGEWAYS RESULTING FROM LAND DEVELOPMENT OR LAND DISTURBING ACTIVITIES.

17. KEEP A COPY OF THE EROSION CONTROL PLAN ON SITE.

0 5' 10' 20'
SCALE: 1" = 10'

100% CONSTRUCTION DOCUMENTS

Revisions: | Date

CONSULTANTS:

GRAEF
5126 W. Terrace Drive
Suite 111
Madison, WI 53718-8343
608 / 242 1550
608 / 242 0787 fax
www.graef-usa.com

ARCHITECT/ENGINEERS:

13100 watertown plank road
suite 200
elm grove, wi 53122
p 262.641.0746
f 262.641.0584
nagel architects

IBC ENGINEERING SERVICES INC.
N8 W22195 JOHNSON DR, STE 180 WAUKESHA, WI 53186
262.549.1190
fx 262.549.1620

Drawing Title: EXISTING SITE AND EROSION CONTROL PLAN	Project Title: Middleton VAH Construct Pharmacy Cache		Project Number: 607-13-101
			Building Number: 19
Approved: Project Director	Location: Madison, WI		Drawing Number: C100
	Date: May 13, 2013	Checked: EGP / Drawn: KRN	Dwg. of

Office of Construction and Facilities Management
Department of Veterans Affairs

VA FORM 08-6231

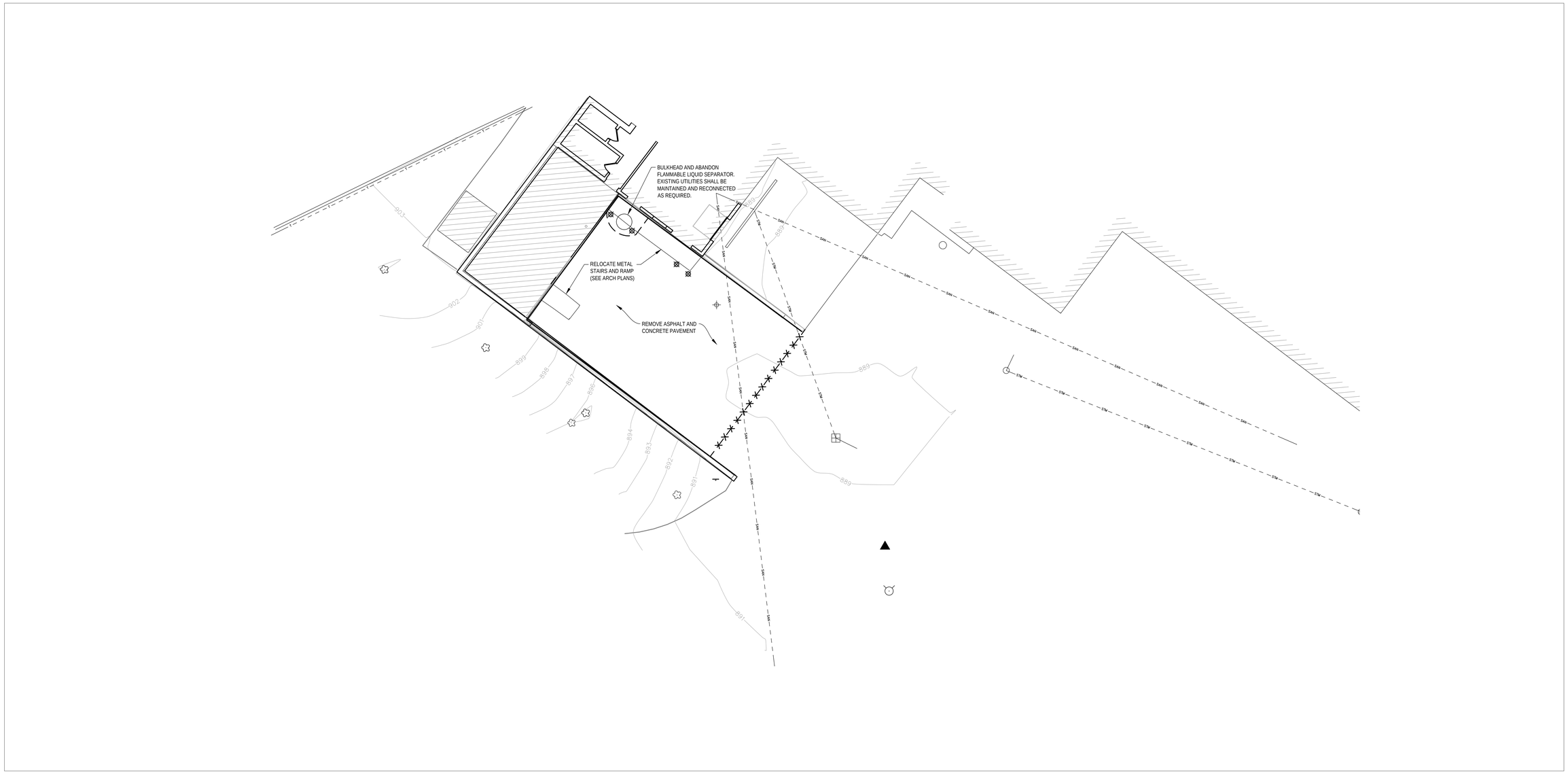

GENERAL NOTES

1. UNDERGROUND UTILITIES HAVE BEEN SHOWN TO A REASONABLE DEGREE OF ACCURACY AND IT SHALL BE THE CONTRACTOR'S RESPONSIBILITY TO VERIFY THE EXACT LOCATION OF ALL UNDERGROUND UTILITIES.
2. CONTRACTOR TO COORDINATE WITH UTILITY OWNER ON RELOCATION OF EXISTING UTILITY.

LEGEND

- REMOVE EXISTING SIDEWALK
- X X X SAWCUT
- REMOVE BOLLARD

REMOVAL NOTES

1. EXISTING CONDITIONS SHALL BE FIELD VERIFIED BY THE CONTRACTOR AND DISCREPENCIES REPORTED TO THE ENGINEER PRIOR TO STARTING WORK.
2. CONTRACTOR SHALL VERIFY ALL EXISTING LINES NOTED FOR ABANDONMENT OR REMOVAL. EXISTING UTILITIES MUST REMAIN IN SERVICE UNTIL NEW UTILITIES OR PLUMBING IS INSTALLED.
3. CONTRACTOR IS RESPONSIBLE FOR SECURING THE JOB SITE TO PROTECT THE PUBLIC. COORDINATE WITH OWNER OPERATIONS.
4. CONTRACTOR IS RESPONSIBLE FOR COMPLIANCE WITH LOCAL ORDINANCES FOR DUST CONTROL. COORDINATE WITH VA.
5. CONTRACTOR RESPONSIBLE TO SALVAGE EXISTING ONSITE BASE COURSE TO PROVIDE ENOUGH FOR USE IN GRADING AND RESHAPING UNDER NEW ASPHALT AREA.

0 5' 10' 20'
SCALE: 1" = 10'

100% CONSTRUCTION DOCUMENTS

Revisions:	Date

CONSULTANTS:

GRAEF
5126 W. Terrace Drive
Suite 111
Madison, WI 53718-8343
608 / 242 1550
608 / 242 0787 fax
www.graef-usa.com

ARCHITECT/ENGINEERS:

13100 watertown plank road
suite 200
elm grove, wi 53122
p 262.641.0746
f 262.641.0584
nagel architects
IBC ENGINEERING SERVICES INC.
N8 W22195 JOHNSON DR. STE 180 WAUKESHA, WI 53186
262.549.1190
fx 262.549.1620

Drawing Title: DEMOLITION PLAN	Project Title: Middleton VAH Construct Pharmacy Cache		Project Number: 607-13-101
			Building Number: 19
Approved: Project Director	Location: Madison, WI		Drawing Number: C200
	Date: May 13, 2013	Checked: EGP	Drawn: KRN
			Dwg. of

Office of Construction and Facilities Management

Department of Veterans Affairs

VA FORM 08-6231

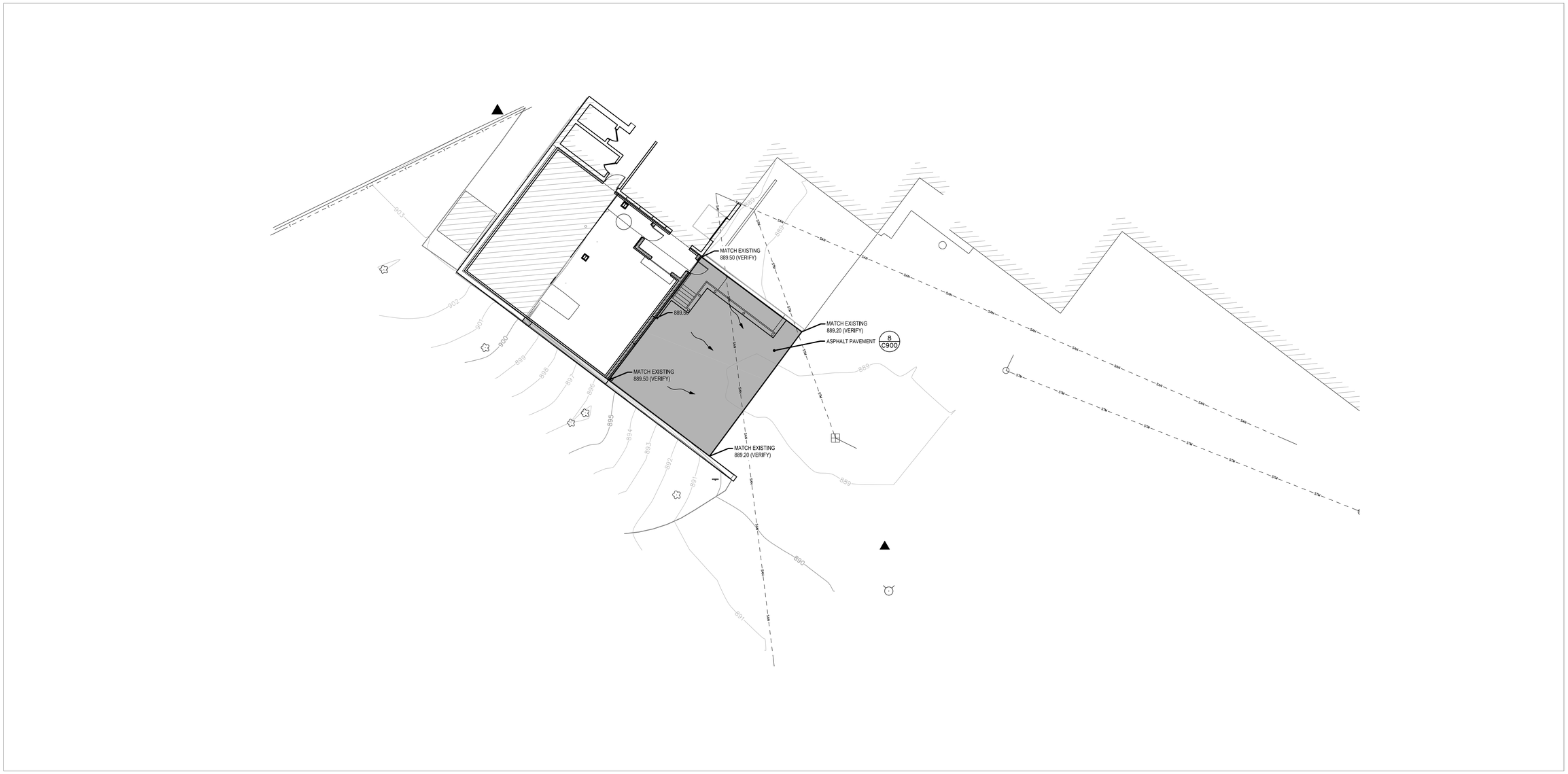

GENERAL NOTES:

1. ALL DISTURBED LAWN AREAS SHALL BE RESTORED USING MADISON PARKS BLEND FULL SUN.
2. PROTECT EXISTING UTILITIES AND SURFACE IMPROVEMENTS TO REMAIN. ANY DAMAGE SHALL BE REPAIRED OR REPLACED AT THE CONTRACTOR'S EXPENSE.

LEGEND

- CONTROL POINT
- PROPOSED CONTOUR
- DRAINAGE ARROW
- ASPHALT

0 5' 10' 20'
SCALE: 1" = 10'

100% CONSTRUCTION DOCUMENTS

Revisions:	Date

CONSULTANTS:

GRAEF
5126 W. Terrace Drive
Suite 111
Madison, WI 53718-8343
608 / 242 1550
608 / 242 0787 fax
www.graef-usa.com

ARCHITECT/ENGINEERS:

13100 watertown plank road
suite 200
elm grove, wi 53122
p 262.641.0746
f 262.641.0584

nagel architects

IBC ENGINEERING SERVICES INC.
N8 W22395 JOHNSON DR. STE 180 262.549.1190
WAUKESHA, WI 53186 fx 262.549.1620

Drawing Title: SITE LAYOUT AND GRADING PLAN

Approved: Project Director

Project Title: Middleton VAH Construct Pharmacy Cache

Location: Madison, WI

Date: May 13, 2013 | Checked: EGP | Drawn: KRN

Project Number: 607-13-101

Building Number: 19

Drawing Number: C300

Dwg. of

Office of Construction and Facilities Management

Department of Veterans Affairs

VA FORM 08-6231

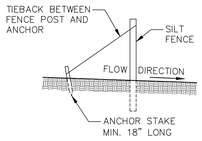

SILT FENCE TIE BACK
N.T.S.

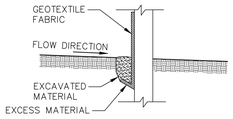

TRENCH DETAIL
N.T.S.

GENERAL NOTES:

DETAIL OF CONSTRUCTION NOT SHOWN ON THIS DRAWING SHALL CONFORM TO THE PERTINENT REQUIREMENTS OF THE WISCONSIN DNR CONSTRUCTION SITE BEST MANAGEMENT PRACTICE HANDBOOK.

WHEN POSSIBLE THE SILT FENCE SHOULD BE CONSTRUCTED IN AN ARC OR HORSE SHOE SHAPE, WITH THE ENDS POINTING UP SLOPE TO MAXIMIZE BOTH STRENGTH AND EFFECTIVENESS.

EXCAVATE A TRENCH A MINIMUM OF 4" WIDE & 6" DEEP TO BURY AND ANCHOR THE GEOTEXTILE FABRIC. FOLD MATERIAL TO FIT TRENCH AND BACKFILL & COMPACT TRENCH WITH EXCAVATED SOIL.

1 SILT TIE BACK AND TRENCH
N.T.S.

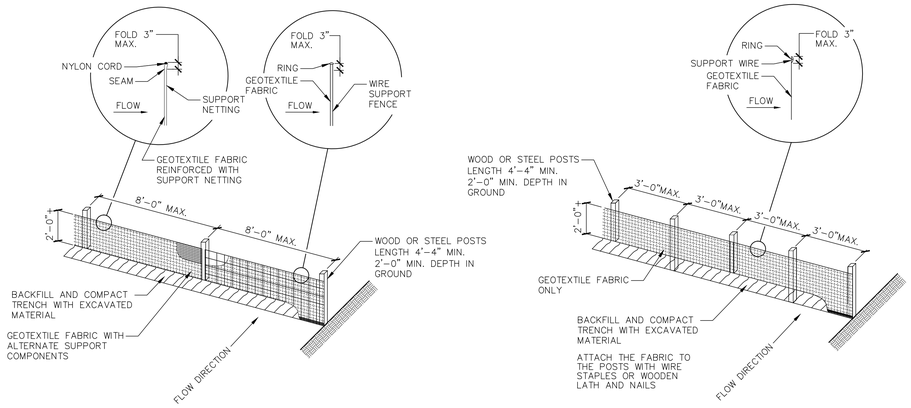

ALTERNATE "A"

NOTE: ADDITIONAL POST DEPTH OR TIE BACKS MAY BE REQUIRED IN UNSTABLE SOILS

ALTERNATE "B"

2 SILT FENCE
N.T.S.

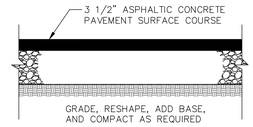

3 TYPICAL ASPHALT PAVING
N.T.S.

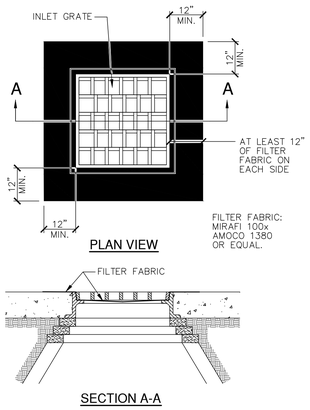

4 INLET GRATE SCREEN - SQUARE/RECTANGULAR
N.T.S.

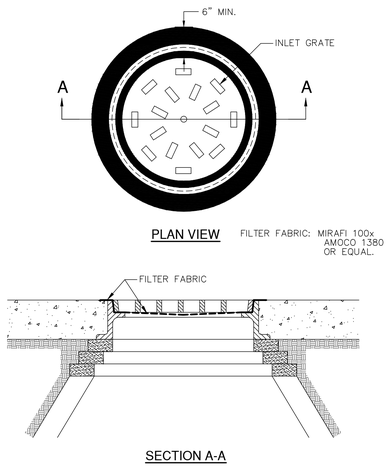

5 INLET GRATE SCREEN - ROUND
N.T.S.

100% CONSTRUCTION DOCUMENTS

Revisions:	Date

CONSULTANTS:

GRAEF
5126 W. Terrace Drive
Suite 111
Madison, WI 53718-8343
608 / 242 1550
608 / 242 0787 fax
www.graef-usa.com

ARCHITECT/ENGINEERS:

13100 watertown plank road
suite 200
elm grove, wi 53122
p 262.641.0746
f 262.641.0584
nagel architects

IBC ENGINEERING SERVICES INC.
N8 W22195 JOHNSON DR. STE 180 WAUKESHA, WI 53186
262.549.1190
fx 262.549.1620

Drawing Title: SITE CONSTRUCTION DETAILS

Approved: Project Director

Project Title: Middleton VAH Construct Pharmacy Cache

Location: Madison, WI

Date: May 13, 2013 | Checked: EGP | Drawn: KRN

Project Number: 607-13-101

Building Number: 19

Drawing Number: C900

Dwg. of

Office of Construction and Facilities Management

Department of Veterans Affairs

VA FORM 08-6231

DEMOLITION PLAN NOTES:

1. REMOVE EXISTING EXTERIOR WALL
2. REMOVE EXISTING CMU PARTITION/ MASONRY WALL
3. REMOVE EXISTING DOOR AND FRAME.
4. REMOVE EXISTING STORAGE SHELVING & PARTITIONS.
5. REMOVE EXISTING RAMP AND HANDRAIL/GUARDRAIL. (MAINTAIN FOR REUSE)
6. REMOVE EXISTING STAIRS AND HANDRAIL/GUARDRAIL. (MAINTAIN FOR REUSE)
7. REMOVE EXISTING WINDOW. (TURN OVER TO VA)
8. REMOVE FLOOR DRAIN.
9. ABANDON EXISTING INTERCEPTOR (SEE CIVIL)
10. REMOVE EXISTING ROOF STRUCTURE AND ROOFING
11. REMOVE EYE WASH. (TURN OVER TO VA)
12. REMOVE EXISTING STEEL STRUCTURE
13. REMOVE EXISTING BOLLARD, TYP.
14. REMOVE EXISTING OVERHEAD DOOR, TRACK, OPERATOR, AND RELATED CONSTRUCTION.
15. REMOVE EXISTING DOCK BUMPER
16. REMOVE EXISTING CONCRETE FLOOR SLAB
17. REMOVE EXISTING GUARDRAIL, COMPLETE.
18. CREATE OPENING IN EXISTING WALL
19. REMOVE EXISTING ASPHALT. (SEE CIVIL)

GENERAL NOTES:

1. EXISTING BUILDING PLANS HAVE BEEN SHOWN ACCORDING TO ORIGINAL BUILDING PLANS AND FIELD NOTES AND MEASUREMENTS. EXISTING CONDITIONS AND DIMENSIONS SHALL BE FIELD VERIFIED BY CONTRACTORS AND DISCREPANCIES REPORTED TO THE ARCHITECT PRIOR TO FRAMING.

2. EXISTING WALLS, PARTITIONS, FLOOR LINES AND DOORS AND FRAMES THAT REMAIN ARE SHOWN IN CONTINUOUS LINE WEIGHT. THESE AND EXISTING FLOOR AND WALL FINISHES THAT ARE SCHEDULED TO REMAIN SHALL BE PROTECTED FROM DAMAGE DURING DEMOLITION AND CONSTRUCTION. ANY SUCH EXISTING CONDITIONS WHICH ARE DAMAGED OR BECOME UNSTABLE DUE TO OTHER DEMOLITION SHALL BE REPLACED AT NO COST TO OWNER WITH NEW CONSTRUCTION TO MATCH.

3. GC SHALL PROVIDE AND MAINTAIN APPROPRIATE BARRICADES AND SAFETY MEASURES IN AREAS OF CONSTRUCTION AT ALL TIMES.

4. ALL CUTTING AND PATCHING SHALL BE THE RESPONSIBILITY OF EACH SUBCONTRACTOR UNLESS OTHERWISE STIPULATED BY OR ARRANGED WITH THE GC.

5. ALL EXISTING WALLS, PATCH FLUSH TO REPAIR EXISTING HOLES, DAMAGED AREAS AND WHERE WALLS WERE PREVIOUSLY REMOVED, OR UTILITY MODIFICATIONS WERE PERFORMED. PROVIDE NEW FINISHES PER SCHEDULE.

6. PROVIDE GYPSUM BOARD CONTROL JOINTS AT ALL LOCATIONS WHERE NEW WALL SURFACE MEETS EXISTING TO REMAIN.

7. ALL DIMENSIONS ARE TO FACE OF STUD AT NEW WALL CONSTRUCTION OR FACE OF EXISTING WALL SURFACE TO REMAIN UNLESS NOTED OTHERWISE.

8. ALL DIMENSIONS NOTED TO BE BE VERIFIED SHALL BE VERIFIED ON SITE BY THE CONTRACTOR AND REPORTED TO THE ARCHITECT FOR CONFIRMATION PRIOR TO FRAMING OF WALLS.

9. DIMENSIONS NOTED AS CLEAR OR CL'R ARE FINAL FINISHED WALL SURFACE TO FINAL FINISHED WALL SURFACE, SEE FINISH SCHEDULE AND VERIFY FINAL FINISH OF WALL PRIOR TO FRAMING.

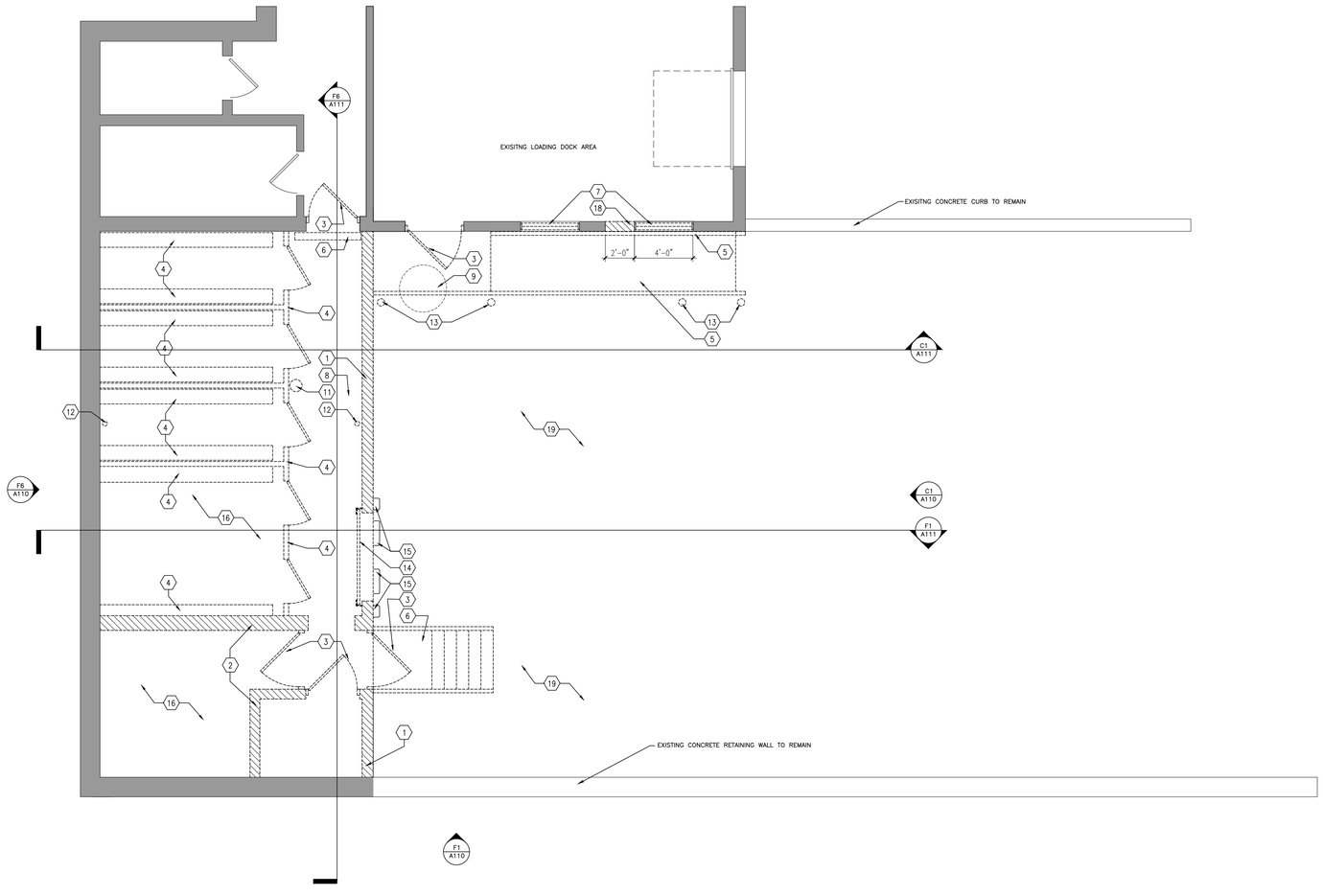

F1 GROUND FLOOR DEMO PLAN

1/4" = 1'-0"

PLAN NORTH

100% CONSTRUCTION DOCUMENTS

Revisions:	Date

CONSULTANTS:

ARCHITECT/ENGINEERS:

13100 watertown plank road
suite 200
elm grove, wi 53122

p 262.641.0746
f 888.600.6207

nagel architects

IBC ENGINEERING SERVICES INC.
N8 W22195 JOHNSON DR. STE 120 WAUKESHA, WI 53186 tx 262.549.1190 fx 262.549.1620

Drawing Title: GROUND FLOOR PLAN DEMOLITION AND NOTES

Approved: Project Director

Project Title: Middleton VAH Construct Pharmacy Cache

Location: Madison, WI

Date: May 13, 2013

Checked: SAM

Drawn: AJS

Project Number: 607-13-101

Building Number: 19

Drawing Number: A100

Office of Construction and Facilities Management

Department of Veterans Affairs

VA FORM 08-6231

DEMOLITION PLAN NOTES:

1. REMOVE EXISTING EXTERIOR WALL
2. REMOVE EXISTING CMU PARTITION/ MASONRY WALL
3. REMOVE EXISTING DOOR AND FRAME.
4. REMOVE EXISTING STORAGE SHELVING & PARTITIONS.
5. REMOVE EXISTING RAMP AND HANDRAIL/GUARDRAIL. (MAINTAIN FOR REUSE)
6. REMOVE EXISTING STAIRS AND HANDRAIL/GUARDRAIL. (MAINTAIN FOR REUSE)
7. REMOVE EXISTING WINDOW. (TURN OVER TO VA)
8. REMOVE FLOOR DRAIN.
9. ABANDON EXISTING INTERCEPTOR (SEE CIVIL)
10. REMOVE EXISTING ROOF STRUCTURE AND ROOFING
11. REMOVE EYE WASH. (TURN OVER TO VA)
12. REMOVE EXISTING STEEL STRUCTURE
13. REMOVE EXISTING BOLLARD, TYP.
14. REMOVE EXISTING OVERHEAD DOOR, TRACK, OPERATOR, AND RELATED CONSTRUCTION.
15. REMOVE EXISTING DOCK BUMPER
16. REMOVE EXISTING CONCRETE FLOOR SLAB
17. REMOVE EXISTING GUARDRAIL, COMPLETE.
18. CREATE OPENING IN EXISTING WALL
19. REMOVE EXISTING ASPHALT. (SEE CIVIL)

GENERAL NOTES:

1. EXISTING BUILDING PLANS HAVE BEEN SHOWN ACCORDING TO ORIGINAL BUILDING PLANS AND FIELD NOTES AND MEASUREMENTS. EXISTING CONDITIONS AND DIMENSIONS SHALL BE FIELD VERIFIED BY CONTRACTORS AND DISCREPANCIES REPORTED TO THE ARCHITECT PRIOR TO FRAMING.

2. EXISTING WALLS, PARTITIONS, FLOOR LINES AND DOORS AND FRAMES THAT REMAIN ARE SHOWN IN CONTINUOUS LINE WEIGHT. THESE AND EXISTING FLOOR AND WALL FINISHES THAT ARE SCHEDULED TO REMAIN SHALL BE PROTECTED FROM DAMAGE DURING DEMOLITION AND CONSTRUCTION. ANY SUCH EXISTING CONDITIONS WHICH ARE DAMAGED OR BECOME UNSTABLE DUE TO OTHER DEMOLITION SHALL BE REPLACED AT NO COST TO OWNER WITH NEW CONSTRUCTION TO MATCH.

3. GC SHALL PROVIDE AND MAINTAIN APPROPRIATE BARRICADES AND SAFETY MEASURES IN AREAS OF CONSTRUCTION AT ALL TIMES.

4. ALL CUTTING AND PATCHING SHALL BE THE RESPONSIBILITY OF EACH SUBCONTRACTOR UNLESS OTHERWISE STIPULATED BY OR ARRANGED WITH THE GC.

5. ALL EXISTING WALLS, PATCH FLUSH TO REPAIR EXISTING HOLES, DAMAGED AREAS AND WHERE WALLS WERE PREVIOUSLY REMOVED, OR UTILITY MODIFICATIONS WERE PERFORMED. PROVIDE NEW FINISHES PER SCHEDULE.

6. PROVIDE GYPSUM BOARD CONTROL JOINTS AT ALL LOCATIONS WHERE NEW WALL SURFACE MEETS EXISTING TO REMAIN.

7. ALL DIMENSIONS ARE TO FACE OF STUD AT NEW WALL CONSTRUCTION OR FACE OF EXISTING WALL SURFACE TO REMAIN UNLESS NOTED OTHERWISE.

8. ALL DIMENSIONS NOTED TO BE BE VERIFIED SHALL BE VERIFIED ON SITE BY THE CONTRACTOR AND REPORTED TO THE ARCHITECT FOR CONFIRMATION PRIOR TO FRAMING OF WALLS.

9. DIMENSIONS NOTED AS CLEAR OR CL'R ARE FINAL FINISHED WALL SURFACE TO FINAL FINISHED WALL SURFACE, SEE FINISH SCHEDULE AND VERIFY FINAL FINISH OF WALL PRIOR TO FRAMING.

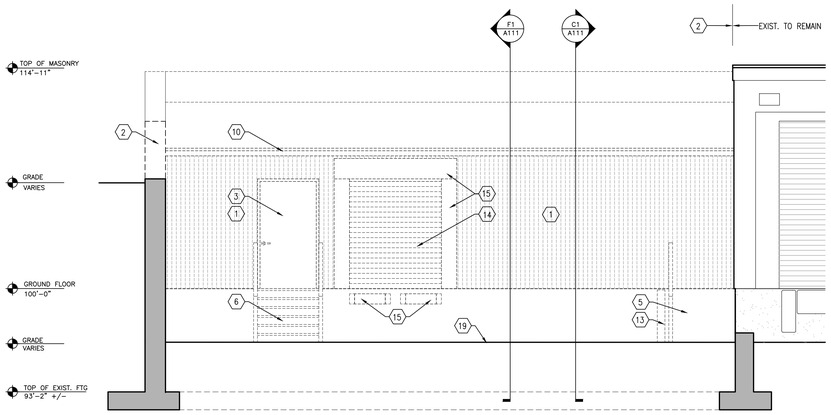

C1 EAST ELEVATION

1/4" = 1'-0"

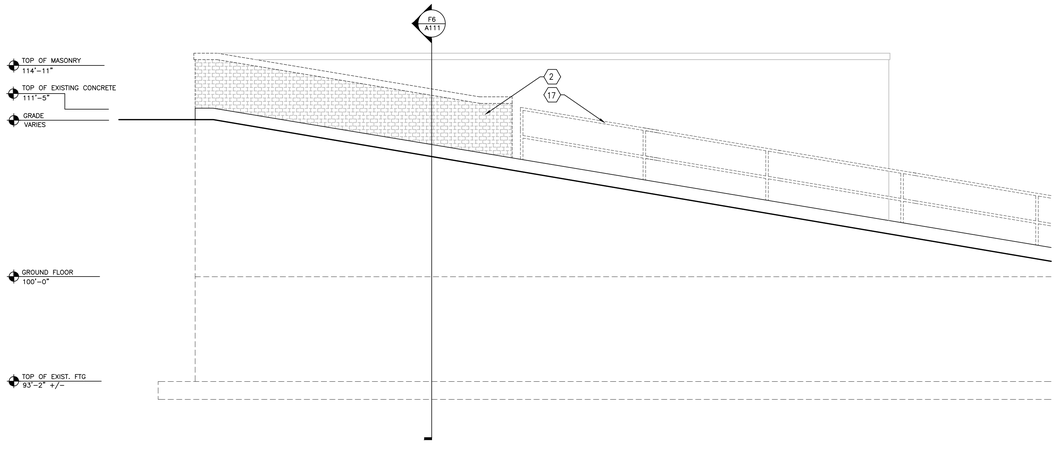

F1 SOUTH ELEVATION

1/4" = 1'-0"

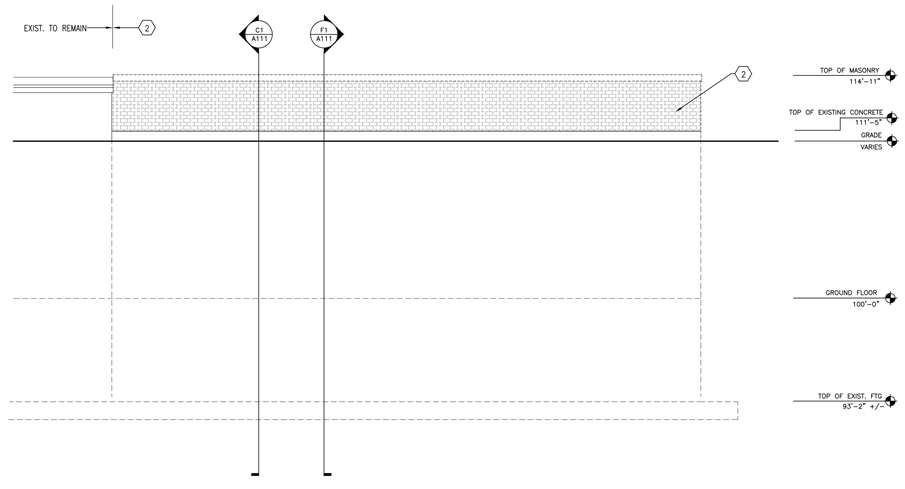

F6 WEST ELEVATION

1/4" = 1'-0"

100% CONSTRUCTION DOCUMENTS

Revisions:	Date

CONSULTANTS:

ARCHITECT/ENGINEERS:

13100 watertown plank road
suite 200
elm grove, wi 53122

p 262.641.0746
f 888.600.6207

nagel architects

IBC ENGINEERING SERVICES INC.
N8 W22195 JOHNSON DR. STE 120 WAUKESHA, WI 53186 p 262.549.1190 fx 262.549.1620

Drawing Title: EXISTING EXTERIOR ELEVATIONS DEMOLITION AND NOTES

Approved: Project Director

Project Title: Middleton VAH Construct Pharmacy Cache

Location: Madison, WI

Date: May 13, 2013 | Checked: SAM | Drawn: AJS

Project Number: 607-13-101

Building Number: 19

Drawing Number: A110

Office of Construction and Facilities Management

Department of Veterans Affairs

VA FORM 08-6231

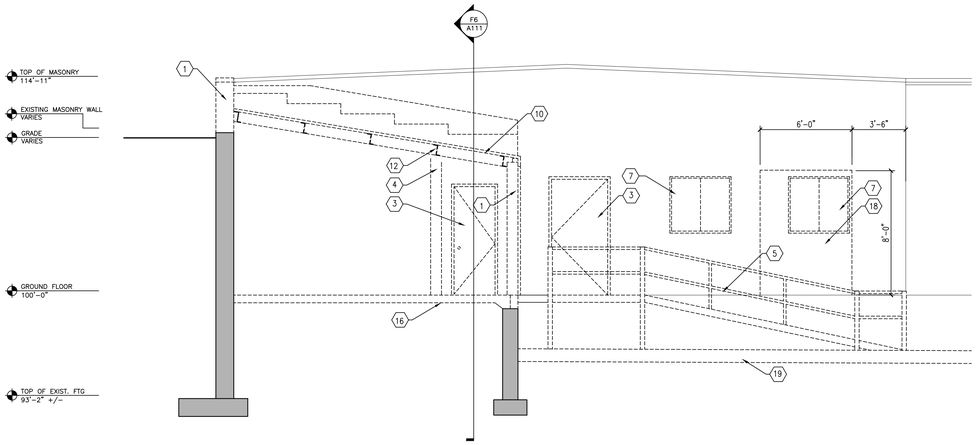

C1 EXISTING BUILDING SECTION LOOKING NORTH

1/4" = 1'-0"

DEMOLITION PLAN NOTES:

1. REMOVE EXISTING EXTERIOR WALL
2. REMOVE EXISTING CMU PARTITION/ MASONRY WALL
3. REMOVE EXISTING DOOR AND FRAME.
4. REMOVE EXISTING STORAGE SHELVING & PARTITIONS.
5. REMOVE EXISTING RAMP AND HANDRAIL/GUARDRAIL. (MAINTAIN FOR REUSE)
6. REMOVE EXISTING STAIRS AND HANDRAIL/GUARDRAIL. (MAINTAIN FOR REUSE)
7. REMOVE EXISTING WINDOW. (TURN OVER TO VA)
8. REMOVE FLOOR DRAIN.
9. REMOVE EXISTING MANHOLE STRUCTURE (SEE CIVIL)
10. REMOVE EXISTING ROOF STRUCTURE AND ROOFING
11. REMOVE EYE WASH. (TURN OVER TO VA)
12. REMOVE EXISTING STEEL STRUCTURE
13. REMOVE EXISTING BOLLARD, TYP.
14. REMOVE EXISTING OVERHEAD DOOR, TRACK, OPERATOR, AND RELATED CONSTRUCTION.
15. REMOVE EXISTING DOCK BUMPER
16. REMOVE EXISTING CONCRETE FLOOR SLAB
17. REMOVE EXISTING GUARDRAIL, COMPLETE.
18. SAW CUT EXISTING MASONRY WALL. PROVIDE LINTEL AS REQUIRED.
19. REMOVE EXISTING ASPHALT. (SEE CIVIL)

GENERAL NOTES:

1. EXISTING BUILDING PLANS HAVE BEEN SHOWN ACCORDING TO ORIGINAL BUILDING PLANS AND FIELD NOTES AND MEASUREMENTS. EXISTING CONDITIONS AND DIMENSIONS SHALL BE FIELD VERIFIED BY CONTRACTORS AND DISCREPANCIES REPORTED TO THE ARCHITECT PRIOR TO FRAMING.

2. EXISTING WALLS, PARTITIONS, FLOOR LINES AND DOORS AND FRAMES THAT REMAIN ARE SHOWN IN CONTINUOUS LINE WEIGHT. THESE AND EXISTING FLOOR AND WALL FINISHES THAT ARE SCHEDULED TO REMAIN SHALL BE PROTECTED FROM DAMAGE DURING DEMOLITION AND CONSTRUCTION. ANY SUCH EXISTING CONDITIONS WHICH ARE DAMAGED OR BECOME UNSTABLE DUE TO OTHER DEMOLITION SHALL BE REPLACED AT NO COST TO OWNER WITH NEW CONSTRUCTION TO MATCH.

3. GC SHALL PROVIDE AND MAINTAIN APPROPRIATE BARRICADES AND SAFETY MEASURES IN AREAS OF CONSTRUCTION AT ALL TIMES.

4. ALL CUTTING AND PATCHING SHALL BE THE RESPONSIBILITY OF EACH SUBCONTRACTOR UNLESS OTHERWISE STIPULATED BY OR ARRANGED WITH THE GC.

5. ALL EXISTING WALLS, PATCH FLUSH TO REPAIR EXISTING HOLES, DAMAGED AREAS AND WHERE WALLS WERE PREVIOUSLY REMOVED, OR UTILITY MODIFICATIONS WERE PERFORMED. PROVIDE NEW FINISHES PER SCHEDULE.

6. PROVIDE GYPSUM BOARD CONTROL JOINTS AT ALL LOCATIONS WHERE NEW WALL SURFACE MEETS EXISTING TO REMAIN.

7. ALL DIMENSIONS ARE TO FACE OF STUD AT NEW WALL CONSTRUCTION OR FACE OF EXISTING WALL SURFACE TO REMAIN UNLESS NOTED OTHERWISE.

8. ALL DIMENSIONS NOTED TO BE BE VERIFIED SHALL BE VERIFIED ON SITE BY THE CONTRACTOR AND REPORTED TO THE ARCHITECT FOR CONFIRMATION PRIOR TO FRAMING OF WALLS.

9. DIMENSIONS NOTED AS CLEAR OR CL'R ARE FINAL FINISHED WALL SURFACE TO FINAL FINISHED WALL SURFACE, SEE FINISH SCHEDULE AND VERIFY FINAL FINISH OF WALL PRIOR TO FRAMING.

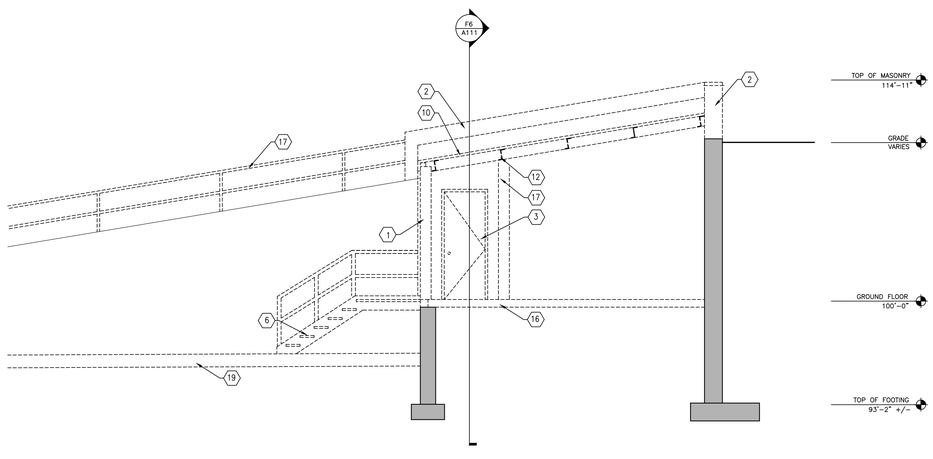

F1 EXISTING BUILDING SECTION LOOKING SOUTH

1/4" = 1'-0"

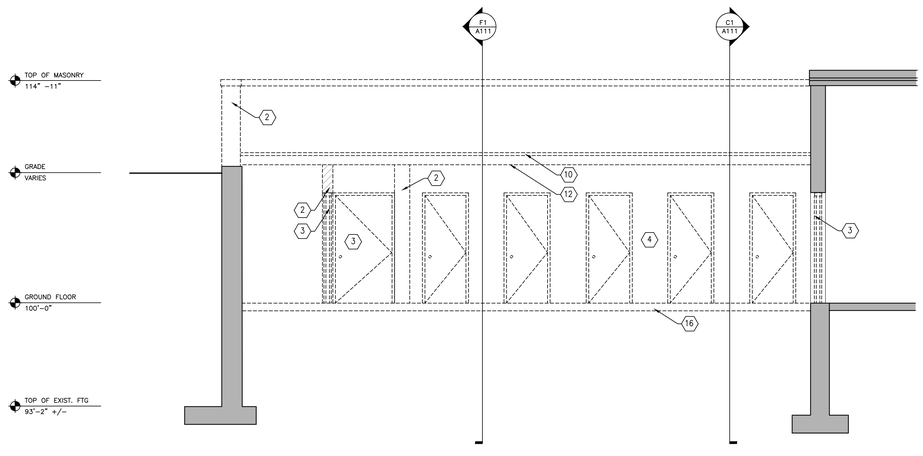

F6 EXISTING BUILDING SECTION LOOKING WEST

1/4" = 1'-0"

100% CONSTRUCTION DOCUMENTS

Revisions:	Date

CONSULTANTS:

ARCHITECT/ENGINEERS:

13100 watertown plank road
suite 200
elm grove, wi 53122

p 262.641.0746
f 888.600.6207

nagel architects

IBC ENGINEERING SERVICES INC.
N8 W22195 JOHNSON DR. STE 120 262.549.1190
WAUKESHA, WI 53186 fx 262.549.1620

Drawing Title: EXISTING BUILDING SECTIONS DEMOLITION AND NOTES

Approved: Project Director

Project Title: Middleton VAH Construct Pharmacy Cache

Location: Madison, WI

Date: May 13, 2013 | Checked: SAM | Drawn: AJM

Project Number: 607-13-101

Building Number: 19

Drawing Number: A111

Office of Construction and Facilities Management

Department of Veterans Affairs

VA FORM 08-6231

ROOM FINISH SCHEDULE

Room No.	Room Name	FLOOR	BASE	WALLS North	WALLS East	WALLS South	WALLS West	MILLWORK Toekick	MILLWORK Base Cabinet	MILLWORK Top	MILLWORK Backsplash	MILLWORK Upper Cabinet	CEILING	NOTES
001	PHARMACY CACHE	RES-1	RB-1	PA-2	PA-2	PA-2	PA-2	PL-1	PL-1	PL-1	PL-1	PL-1	PA-3	
002	VESTIBULE	RES-1	RB-1	PA-2	PA-2	PA-2	PA-2						PA-3	
003	EXISTING PHARMCY LOADING DOCK	–	–	–	–	PA-4	–							

INTERIOR FINISH KEY

CODE	MANUFACTURER & SPEC	NOTES
PA-1	PAINT @ DOORS – SHERMAN WILLIAMS SW7040 SMOKEHOUSE / SHEEN: SATIN	
PA-2	PAINT @ WALLS – SHERMAN WILLIAMS SW6147 PANDA WHITE / GLOSS 2 FINISH	
PA-3	PAINT @ DECK ABOVE – SHERMAN WILLIAMS COLOR: TBD	
PA-4	PAINT @ WALL INFILL– PATCH TO MATCH	
PL-1	PLASTIC LAMINATE FINISH – COLOR: TBD	
RB-1	RUBBER BASE – JOHNSONITE – COLOR: TBD / 4" HIGH COVE BASE	
RES-1	RESINOUS (EPOXY BASE) W. VINYL CHIP BASE/ COLOR: TBD	

DOOR SCHEDULE

Door No.	Room Name	SIZE Width	SIZE Height	SIZE Thickness	DOOR Type	DOOR Material	DOOR Glass	DOOR Fin.	FRAME Type	FRAME Material	FRAME Width	FRAME Fin.	DETAILS Sill	DETAILS Jamb	DETAILS Head	HARDWARE	RATED	COMMENTS
001	PHARMACY CACHE	3'-6"	7'-0"	1 3/4"	D1	HM		PA-1	F1	HM	–	PA-1	–	–	–	1	45	ELECTRIC STRIKE AND C.R.
002	VESTIBULE INTERIOR	3'-6"	7'-0"	1 3/4"	D1	HM		PA-1	F1	HM	–	PA-1	–	–	–	1	45	ELECTRIC STRIKE AND C.R.
003	VESTIBULE EXTERIOR	3'-6"	7'-0"	1 3/4"	D2	HM	Y	PA-1	F1	HM	–	PA-1	–	–	–	2	45	ELECTRIC STRIKE AND C.R.
004	VESTIBULE COILING DOOR	6'-0"	8'-0"	–	–	STEEL	–	PA-1	–	–	–	–	–	–	–	3	45	MAGNETIC LOCK AND C.R.

EQUIPMENT SCHEDULE

SYMBOL	ITEM	FURN.	INSTALL
1	SAFE	VA	G.C.
2	REFRIGERATOR	VA	VA

G.C. TO VERIFY SAFE ANCHOR REQUIREMENTS AND PROVIDE EMBED PLATES OR OTHER ITEMS AS REQUIRED.

GENERAL NOTES:

1. EXISTING BUILDING PLANS HAVE BEEN SHOWN ACCORDING TO ORIGINAL BUILDING PLANS AND FIELD NOTES AND MEASUREMENTS. EXISTING CONDITIONS AND DIMENSIONS SHALL BE FIELD VERIFIED BY CONTRACTORS AND DISCREPANCIES REPORTED TO THE ARCHITECT PRIOR TO FRAMING.

2. EXISTING WALLS, PARTITIONS, FLOOR LINES AND DOORS AND FRAMES THAT REMAIN ARE SHOWN IN CONTINUOUS LINE WEIGHT. THESE AND EXISTING FLOOR AND WALL FINISHES THAT ARE SCHEDULED TO REMAIN SHALL BE PROTECTED FROM DAMAGE DURING DEMOLITION AND CONSTRUCTION. ANY SUCH EXISTING CONDITIONS WHICH ARE DAMAGED OR BECOME UNSTABLE DUE TO OTHER DEMOLITION SHALL BE REPLACED AT NO COST TO OWNER WITH NEW CONSTRUCTION TO MATCH.

3. GC SHALL PROVIDE AND MAINTAIN APPROPRIATE BARRICADES AND SAFETY MEASURES IN AREAS OF CONSTRUCTION AT ALL TIMES.

4. ALL CUTTING AND PATCHING SHALL BE THE RESPONSIBILITY OF EACH SUBCONTRACTOR UNLESS OTHERWISE STIPULATED BY OR ARRANGED WITH THE GC.

5. ALL EXISTING WALLS, PATCH FLUSH TO REPAIR EXISTING HOLES, DAMAGED AREAS AND WHERE WALLS WERE PREVIOUSLY REMOVED, OR UTILITY MODIFICATIONS WERE PERFORMED. PROVIDE NEW FINISHES PER SCHEDULE.

6. ALL WALL TYPES TO BE TYPE "A" UNLESS NOTED OTHERWISE BY SYMBOL OR NOTE.

7. PROVIDE CORNER GUARDS AT ALL OUTSIDE CORNERS AND END WALLS, SEE DETAIL ON SHEET A-601.

8. PROVIDE GYPSUM BOARD CONTROL JOINTS AT ALL LOCATIONS WHERE NEW WALL SURFACE MEETS EXISTING TO REMAIN, SEE SHEET A-601.

9. ALL DIMENSIONS ARE TO FACE OF STUD AT NEW WALL CONSTRUCTION OR FACE OF EXISTING WALL SURFACE TO REMAIN UNLESS NOTED OTHERWISE.

10. ALL DIMENSIONS NOTED TO BE BE VERIFIED SHALL BE VERIFIED ON SITE BY THE CONTRACTOR AND REPORTED TO THE ARCHITECT FOR CONFIRMATION PRIOR TO FRAMING OF WALLS.

11. DIMENSIONS NOTED AS CLEAR OR CL'R ARE FINAL FINISHED WALL SURFACE TO FINAL FINISHED WALL SURFACE, SEE FINISH SCHEDULE AND VERIFY FINAL FINISH OF WALL PRIOR TO FRAMING.

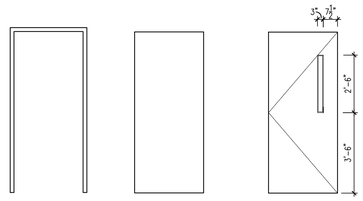

B1 DOOR TYPES
3/8" = 1'-0"

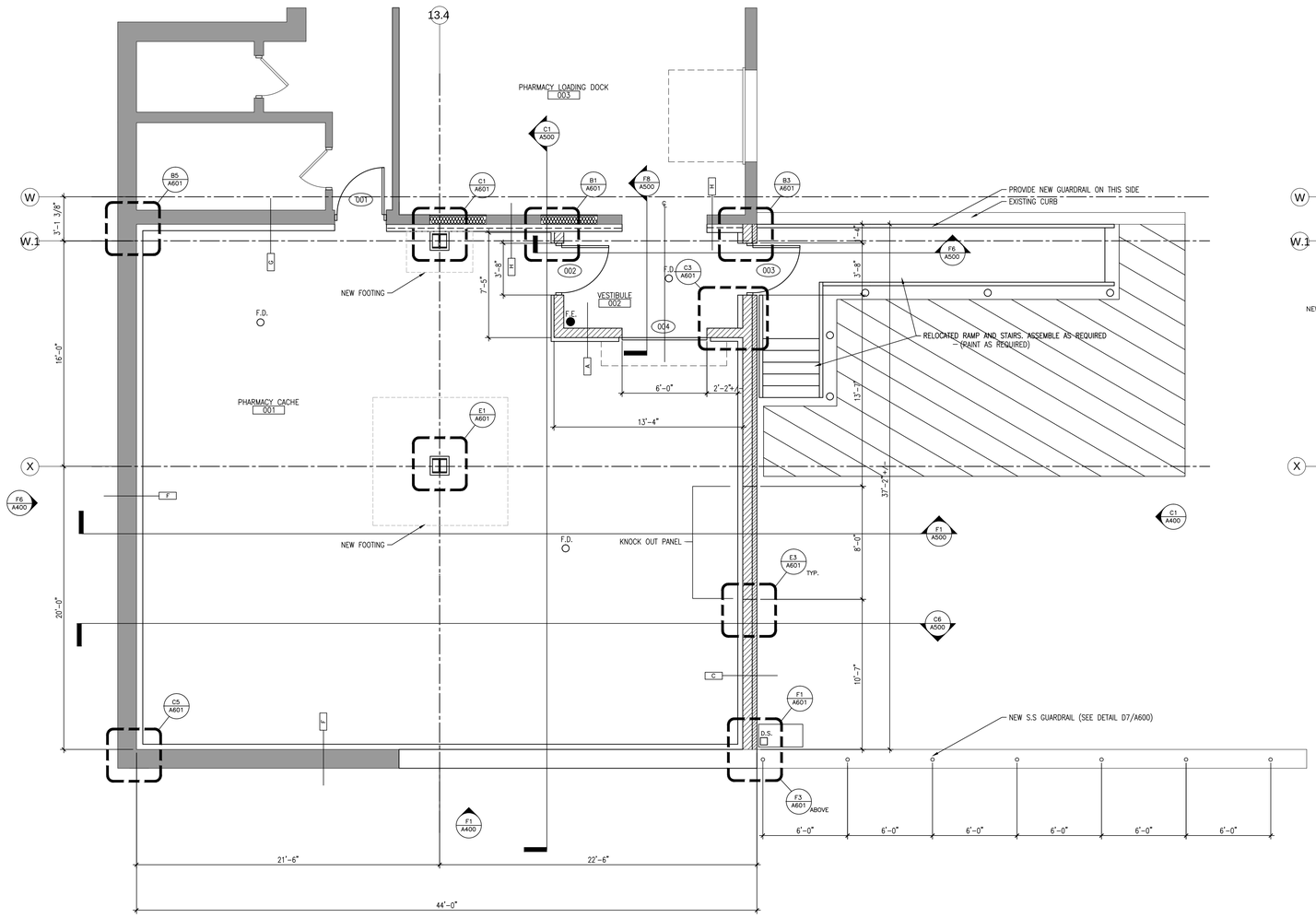

F1 GROUND FLOOR PLAN
1/4" = 1'-0"

PLAN NORTH

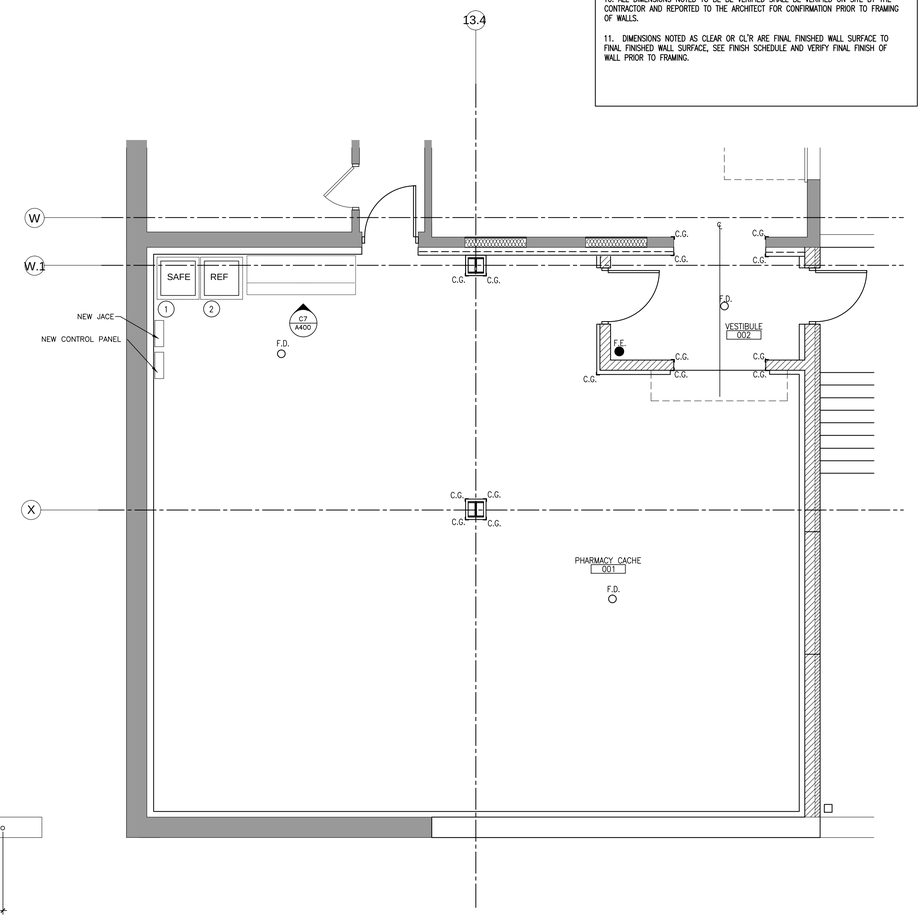

F6 GROUND FLOOR EQUIPMENT PLAN
1/4" = 1'-0"

PLAN NORTH

100% CONSTRUCTION DOCUMENTS

Revisions:	Date

CONSULTANTS:

ARCHITECT/ENGINEERS:

13100 watertown plank road
suite 200
elm grove, wi 53122
p 262.641.0746
f 888.600.6207

nagel architects

IBC ENGINEERING SERVICES INC.
N8 W22195 JOHNSON DR, STE 120
WAUKESHA, WI 53188
262.549.1190
fx 262.549.1620

Drawing Title: GROUND FLOOR PLAN RENOVATION AND NOTES

Approved: Project Director

Project Title: Middleton VAH Construct Pharmacy Cache

Location: Madison, WI

Date: May 13, 2013

Checked: SAM

Drawn: AJM

Project Number: 607-13-101

Building Number: 19

Drawing Number: A200

Office of Construction and Facilities Management

Department of Veterans Affairs

VA FORM 08-6231

GENERAL NOTES:

1. EXISTING BUILDING PLANS HAVE BEEN SHOWN ACCORDING TO ORIGINAL BUILDING PLANS AND FIELD NOTES AND MEASUREMENTS. EXISTING CONDITIONS AND DIMENSIONS SHALL BE FIELD VERIFIED BY CONTRACTORS AND DISCREPANCIES REPORTED TO THE ARCHITECT PRIOR TO FRAMING.

2. EXISTING WALLS, PARTITIONS, FLOOR LINES AND DOORS AND FRAMES THAT REMAIN ARE SHOWN IN CONTINUOUS LINE WEIGHT. THESE AND EXISTING FLOOR AND WALL FINISHES THAT ARE SCHEDULED TO REMAIN SHALL BE PROTECTED FROM DAMAGE DURING DEMOLITION AND CONSTRUCTION. ANY SUCH EXISTING CONDITIONS WHICH ARE DAMAGED OR BECOME UNSTABLE DUE TO OTHER DEMOLITION SHALL BE REPLACED AT NO COST TO OWNER WITH NEW CONSTRUCTION TO MATCH.

3. GC SHALL PROVIDE AND MAINTAIN APPROPRIATE BARRICADES AND SAFETY MEASURES IN AREAS OF CONSTRUCTION AT ALL TIMES.

4. ALL CUTTING AND PATCHING SHALL BE THE RESPONSIBILITY OF EACH SUBCONTRACTOR UNLESS OTHERWISE STIPULATED BY OR ARRANGED WITH THE GC.

5. ALL EXISTING WALLS, PATCH FLUSH TO REPAIR EXISTING HOLES, DAMAGED AREAS AND WHERE WALLS WERE PREVIOUSLY REMOVED, OR UTILITY MODIFICATIONS WERE PERFORMED. PROVIDE NEW FINISHES PER SCHEDULE.

6. ALL WALL TYPES TO BE TYPE "A" UNLESS NOTED OTHERWISE BY SYMBOL OR NOTE.

7. PROVIDE CORNER GUARDS AT ALL OUTSIDE CORNERS AND END WALLS, SEE DETAIL ON SHEET A-501.

8. PROVIDE GYPSUM BOARD CONTROL JOINTS AT ALL LOCATIONS WHERE NEW WALL SURFACE MEETS EXISTING TO REMAIN, SEE SHEET A-501.

9. ALL DIMENSIONS ARE TO FACE OF STUD AT NEW WALL CONSTRUCTION OR FACE OF EXISTING WALL SURFACE TO REMAIN UNLESS NOTED OTHERWISE.

10. ALL DIMENSIONS NOTED TO BE BE VERIFIED SHALL BE VERIFIED ON SITE BY THE CONTRACTOR AND REPORTED TO THE ARCHITECT FOR CONFIRMATION PRIOR TO FRAMING OF WALLS.

11. DIMENSIONS NOTED AS CLEAR OR CL'R ARE FINAL FINISHED WALL SURFACE TO FINAL FINISHED WALL SURFACE, SEE FINISH SCHEDULE AND VERIFY FINAL FINISH OF WALL PRIOR TO FRAMING.

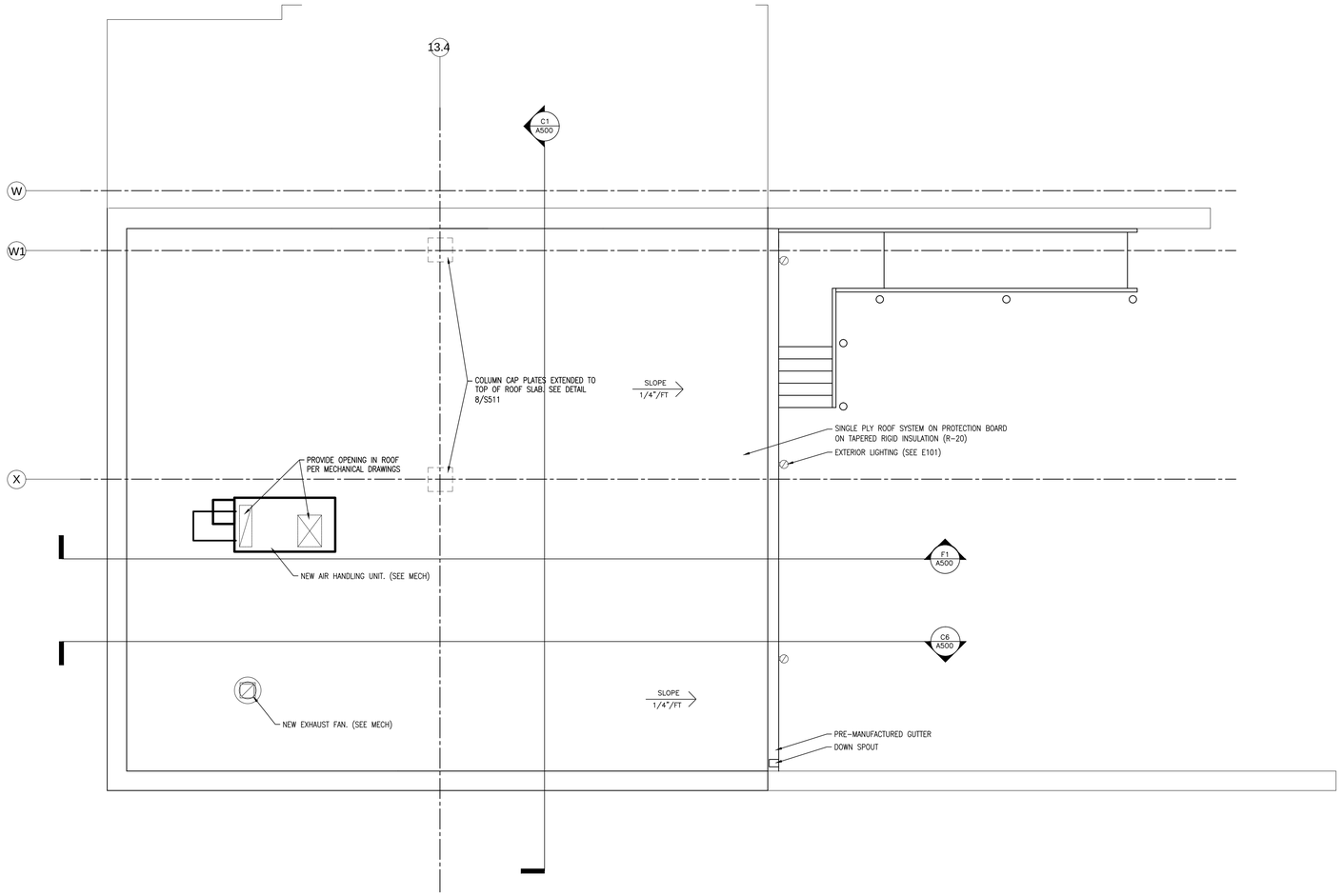

F1 ROOF LEVEL PLAN

1/4" = 1'-0"

PLAN NORTH

100% CONSTRUCTION DOCUMENTS

Revisions:	Date

CONSULTANTS:

ARCHITECT/ENGINEERS:

13100 watertown plank road
suite 200
elm grove, wi 53122

p 262.641.0746
f 888.600.6207

nagel architects

IBC ENGINEERING SERVICES INC.
N8 W22195 JOHNSON DR, STE 120
WAUKESHA, WI 53186
P 262.549.1190
Fx 262.549.1620

Drawing Title: ROOF PLAN RENOVATION AND NOTES

Approved: Project Director

Project Title: Middleton VAH Construct Pharmacy Cache

Location: Madison, WI

Date: May 13, 2013

Checked: SAM

Drawn: AJS

Project Number: 607-13-101

Building Number: 19

Drawing Number: A201

Office of Construction and Facilities Management

Department of Veterans Affairs

VA FORM 08-6231

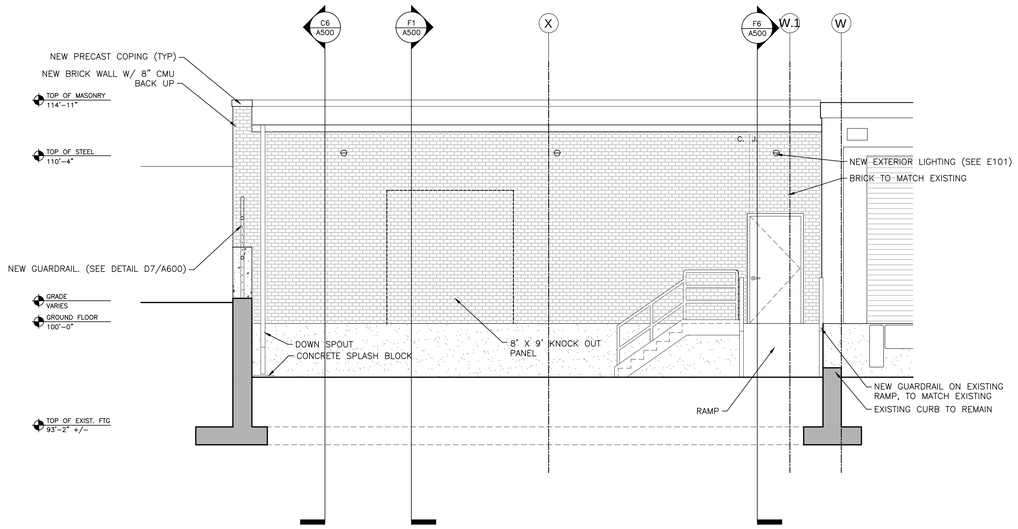

C1 EAST ELEVATION

1/4" = 1'-0"

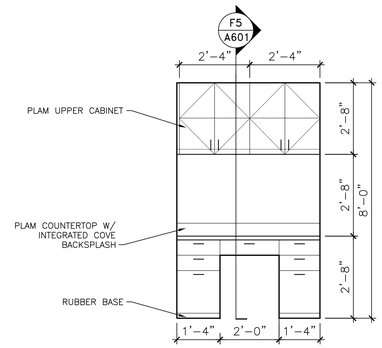

C7 CASEWORK ELEVATION

1/2" = 1'-0"

GENERAL NOTES:

1. EXISTING BUILDING PLANS HAVE BEEN SHOWN ACCORDING TO ORIGINAL BUILDING PLANS AND FIELD NOTES AND MEASUREMENTS. EXISTING CONDITIONS AND DIMENSIONS SHALL BE FIELD VERIFIED BY CONTRACTORS AND DISCREPANCIES REPORTED TO THE ARCHITECT PRIOR TO FRAMING.

2. EXISTING WALLS, PARTITIONS, FLOOR LINES AND DOORS AND FRAMES THAT REMAIN ARE SHOWN IN CONTINUOUS LINE WEIGHT. THESE AND EXISTING FLOOR AND WALL FINISHES THAT ARE SCHEDULED TO REMAIN SHALL BE PROTECTED FROM DAMAGE DURING DEMOLITION AND CONSTRUCTION. ANY SUCH EXISTING CONDITIONS WHICH ARE DAMAGED OR BECOME UNSTABLE DUE TO OTHER DEMOLITION SHALL BE REPLACED AT NO COST TO OWNER WITH NEW CONSTRUCTION TO MATCH.

3. GC SHALL PROVIDE AND MAINTAIN APPROPRIATE BARRICADES AND SAFETY MEASURES IN AREAS OF CONSTRUCTION AT ALL TIMES.

4. ALL CUTTING AND PATCHING SHALL BE THE RESPONSIBILITY OF EACH SUBCONTRACTOR UNLESS OTHERWISE STIPULATED BY OR ARRANGED WITH THE GC.

5. ALL EXISTING WALLS, PATCH FLUSH TO REPAIR EXISTING HOLES, DAMAGED AREAS AND WHERE WALLS WERE PREVIOUSLY REMOVED, OR UTILITY MODIFICATIONS WERE PERFORMED. PROVIDE NEW FINISHES PER SCHEDULE.

6. PROVIDE GYPSUM BOARD CONTROL JOINTS AT ALL LOCATIONS WHERE NEW WALL SURFACE MEETS EXISTING TO REMAIN.

7. ALL DIMENSIONS ARE TO FACE OF STUD AT NEW WALL CONSTRUCTION OR FACE OF EXISTING WALL SURFACE TO REMAIN UNLESS NOTED OTHERWISE.

8. ALL DIMENSIONS NOTED TO BE BE VERIFIED SHALL BE VERIFIED ON SITE BY THE CONTRACTOR AND REPORTED TO THE ARCHITECT FOR CONFIRMATION PRIOR TO FRAMING OF WALLS.

9. DIMENSIONS NOTED AS CLEAR OR CL'R ARE FINAL FINISHED WALL SURFACE TO FINAL FINISHED WALL SURFACE, SEE FINISH SCHEDULE AND VERIFY FINAL FINISH OF WALL PRIOR TO FRAMING.

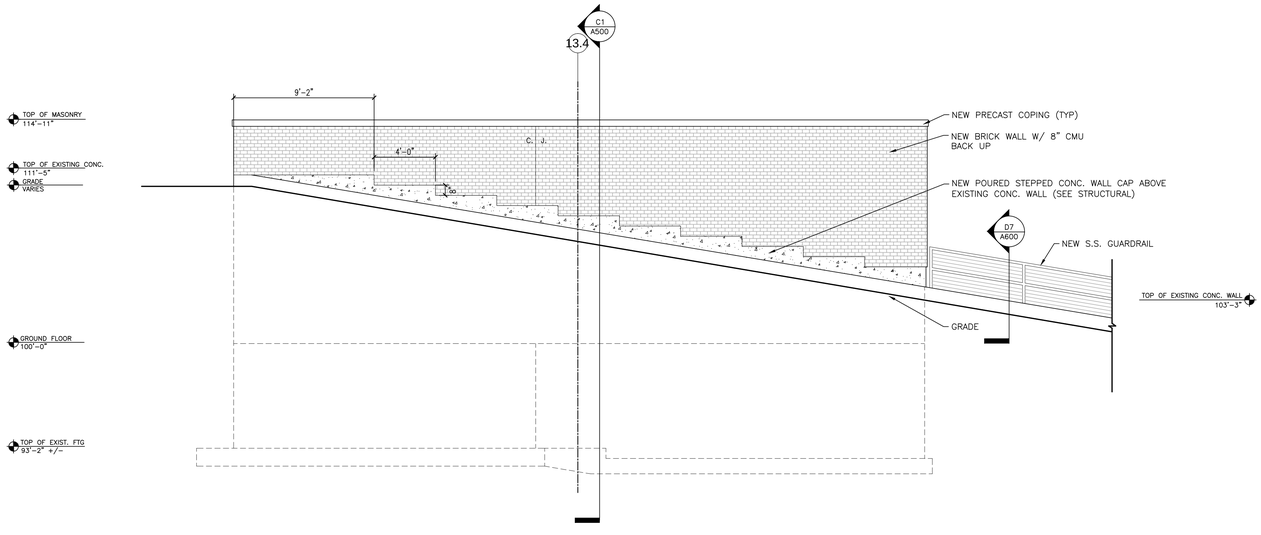

F1 SOUTH ELEVATION

1/4" = 1'-0"

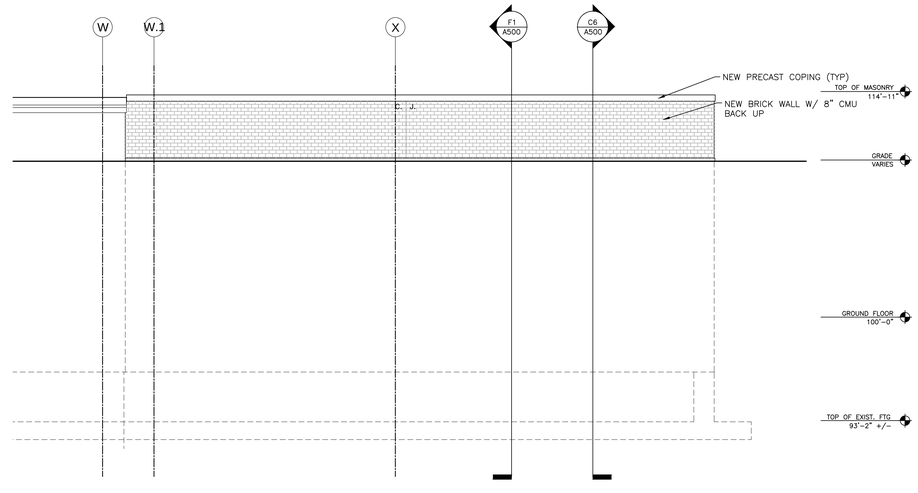

F6 WEST ELEVATION

1/4" = 1'-0"

100% CONSTRUCTION DOCUMENTS

Revisions:	Date

CONSULTANTS:

ARCHITECT/ENGINEERS:

13100 watertown plank road
suite 200
elm grove, wi 53122

p 262.641.0746
f 888.600.6207

nagel architects

IBC ENGINEERING SERVICES INC.
N8 W22195 JOHNSON DR, STE 125 WAUKESHA, WI 53186 tel 262.549.1190 fx 262.549.1620

Drawing Title: NEW EXTERIOR ELEVATIONS RENOVATION AND NOTES

Approved: Project Director

Project Title: Middleton VAH Construct Pharmacy Cache

Location: Madison, WI

Date: May 13, 2013 | Checked: SAM | Drawn: AJS

Project Number: 607-13-101

Building Number: 19

Drawing Number: A400

Office of Construction and Facilities Management

Department of Veterans Affairs

VA FORM 08-6231

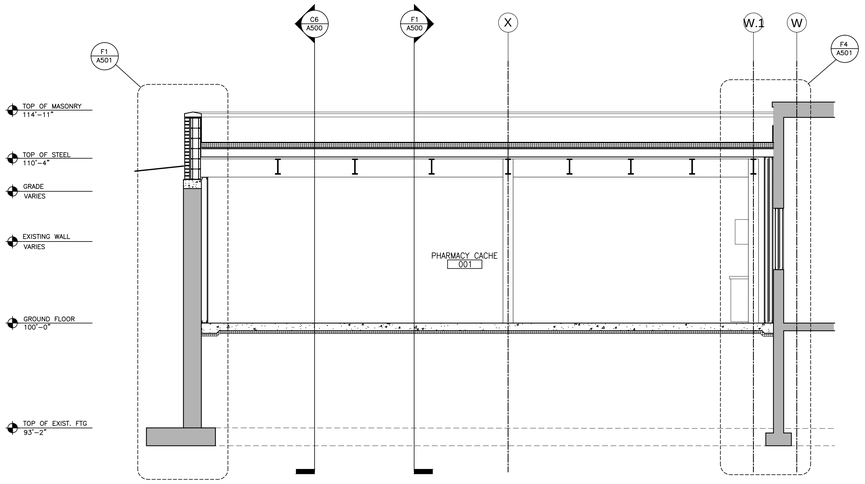

C1 SECTION LOOKING WEST

1/4" = 1'-0"

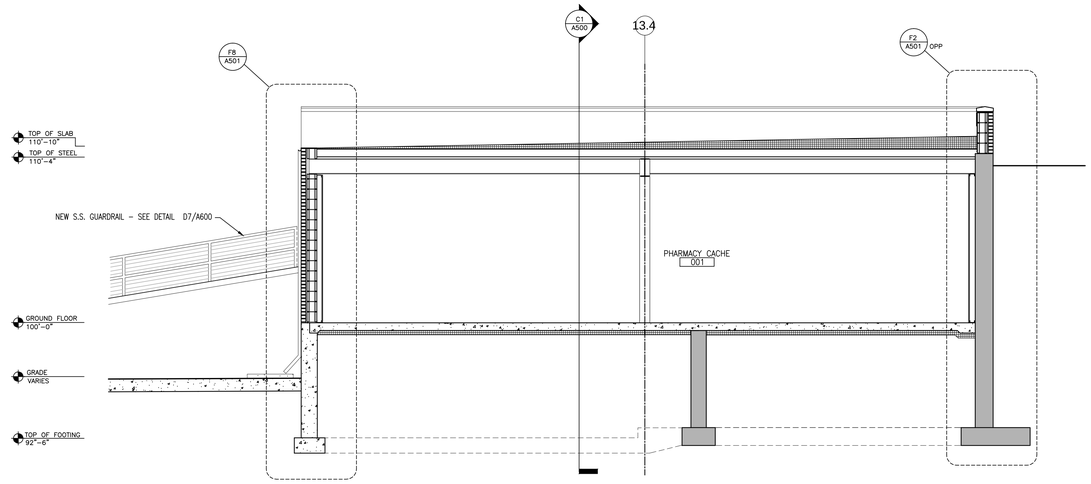

C6 SECTION LOOKING SOUTH

1/4" = 1'-0"

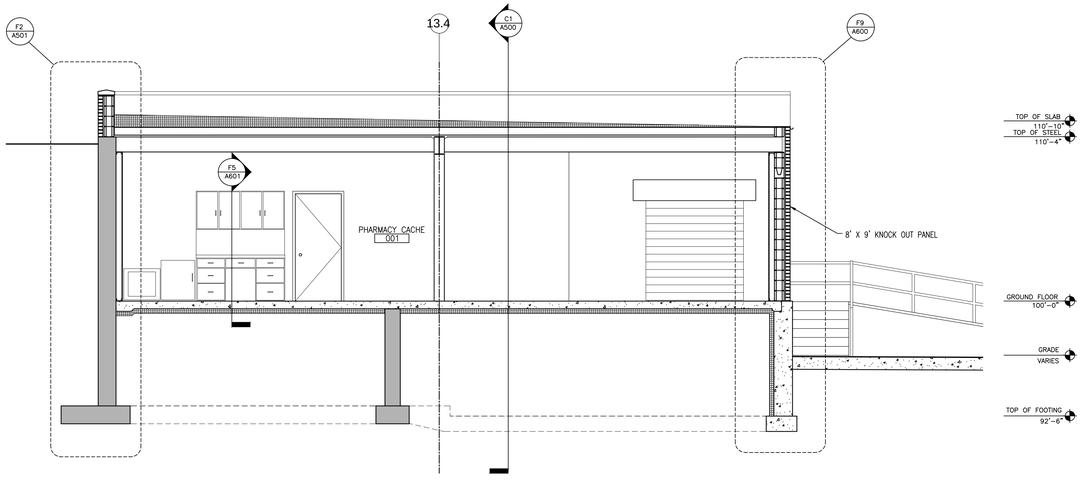

F1 SECTION LOOKING NORTH THROUGH KNOCK OUT PANEL

1/4" = 1'-0"

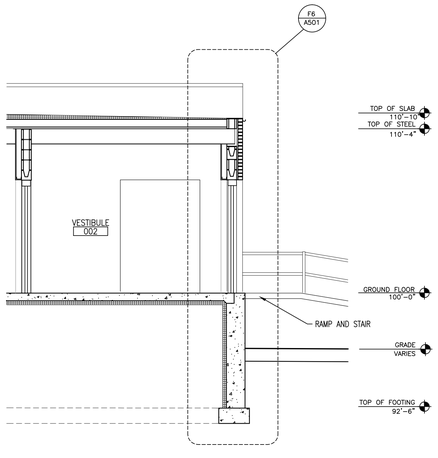

F6 SECTION LOOKING NORTH THROUGH VESTIBULE

1/4" = 1'-0"

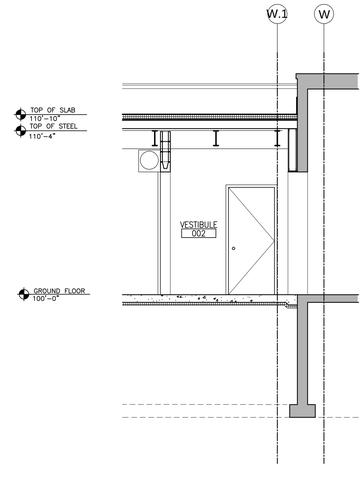

F8 SECTION LOOKING WEST THROUGH VESTIBULE

1/4" = 1'-0"

100% CONSTRUCTION DOCUMENTS

Revisions:	Date

CONSULTANTS:

ARCHITECT/ENGINEERS:

13100 watertown plank road
suite 200
elm grove, wi 53122

p 262.641.0746
f 888.600.6207

nagel architects

IBC ENGINEERING SERVICES INC.
N8 W22195 JOHNSON DR, STE 120 WAUKESHA, WI 53186
p 262.549.1190 fx 262.549.1620

Drawing Title: BUILDING SECTIONS RENOVATION AND NOTES

Approved: Project Director

Project Title: Middleton VAH Construct Pharmacy Cache

Location: Madison, WI

Date: May 13, 2013

Checked: SAM

Drawn: AJS

Project Number: 607-13-101

Building Number: 19

Drawing Number: A500

Office of Construction and Facilities Management

Department of Veterans Affairs

VA FORM 08-6231

WALL TYPES:(SEE A601 FOR MORE INFO)

SPRAY FIREPROOFING 3 HR UL #

BEAMS D925

COLUMNS X772

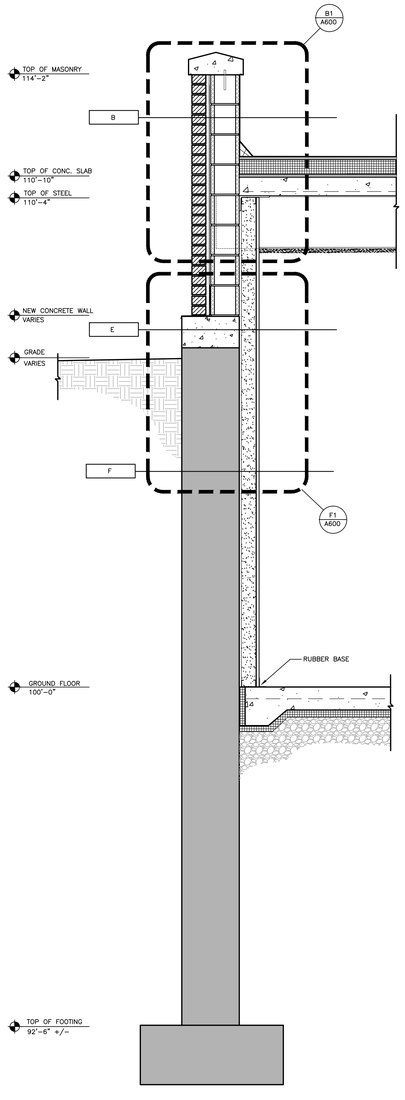

F1 WALL SECTION THROUGH SOUTH WALL

3/4" = 1'-0"

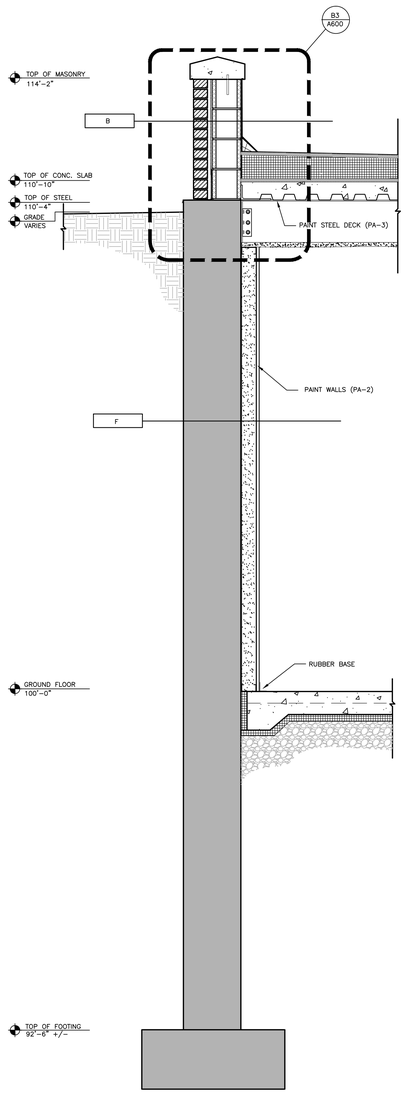

F2 WALL SECTION THROUGH WEST WALL

3/4" = 1'-0"

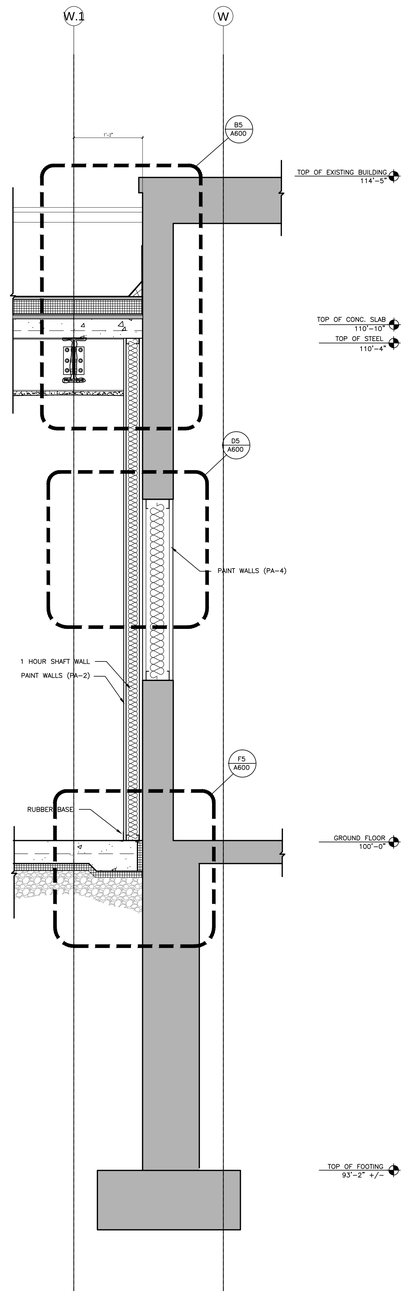

F4 WALL SECTION THROUGH NORTH WALL

3/4" = 1'-0"

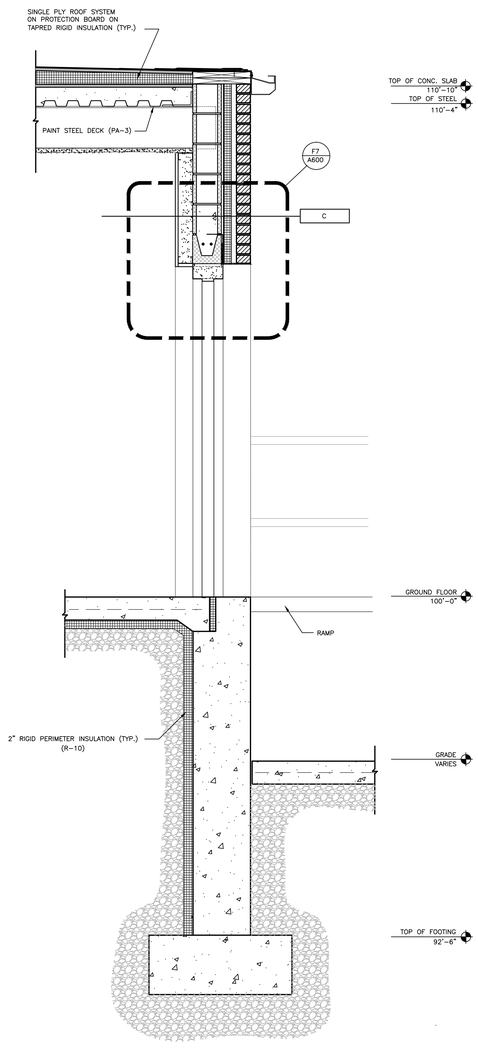

F6 WALL SECTION THROUGH ENTRANCE

3/4" = 1'-0"

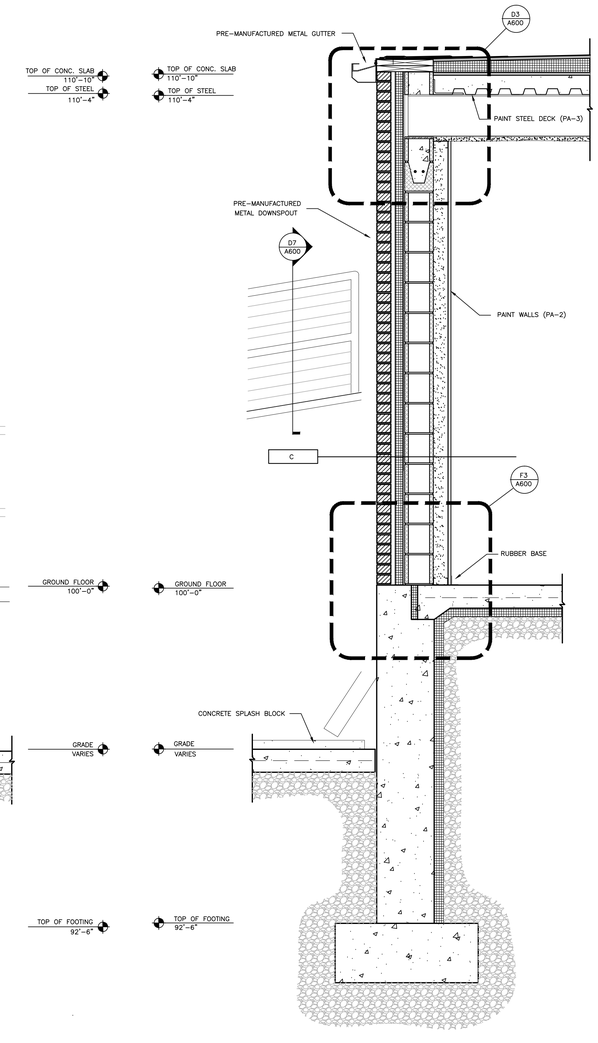

F8 WALL SECTION THROUGH EAST WALL

3/4" = 1'-0"

100% CONSTRUCTION DOCUMENTS

Revisions:	Date

CONSULTANTS:

ARCHITECT/ENGINEERS:

13100 watertown plank road
suite 200
elm grove, wi 53122

p 262.641.0746
f 888.600.6207

nagel architects

IBC ENGINEERING SERVICES INC.
N8 W22195 JOHNSON DR, STE 120 WAUKESHA, WI 53186 tel 262.549.1190 fx 262.549.1620

Drawing Title: EXTERIOR WALL SECTIONS

Approved Project Director

Project Title: Middleton VAH Construct Pharmacy Cache

Location: Madison, WI

Date: May 13, 2013 | Checked: SAM | Drawn: AJS

Project Number: 607-13-101

Building Number: 19

Drawing Number: A501

Office of Construction and Facilities Management

Department of Veterans Affairs

VA FORM 08-6231

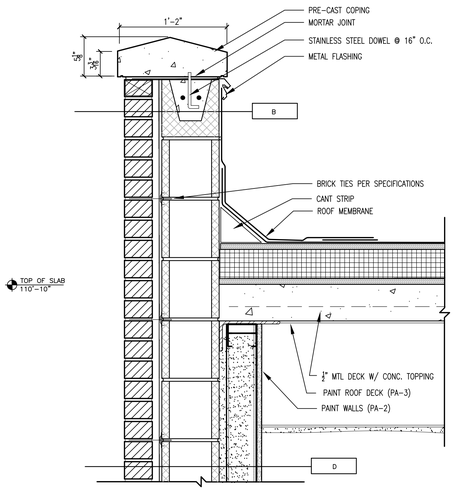

B1 A600 **DETAIL @ SOUTH WALL ROOF**
SCALE: 1 1/2" = 1'-0"

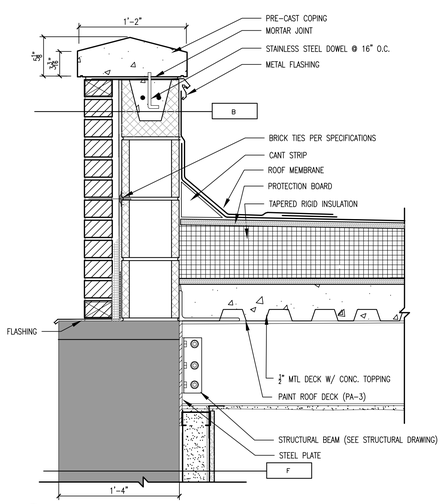

B3 A600 **DETAIL @ WEST WALL BEAM CONNECTION**
SCALE: 1 1/2" = 1'-0"

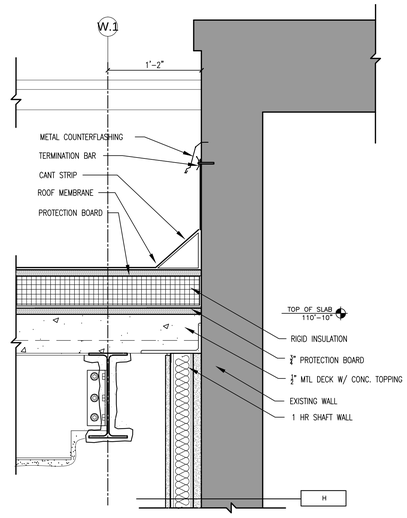

B5 A600 **DETAIL @ NORTH WALL CONECTION**
SCALE: 1 1/2" = 1'-0"

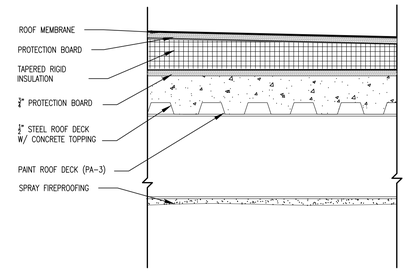

A7 A600 **DETAIL @ ROOF (TYPICAL)**
SCALE: 1 1/2" = 1'-0"

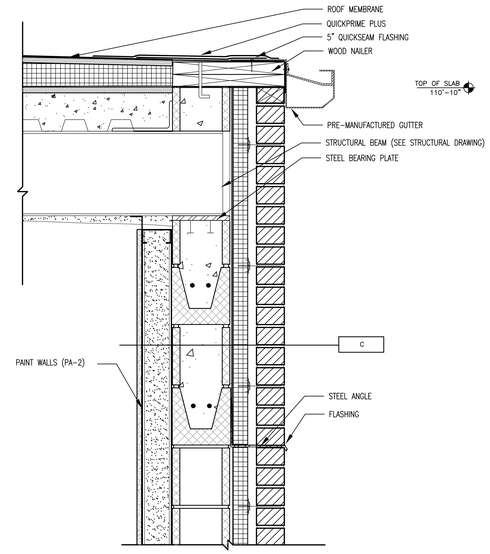

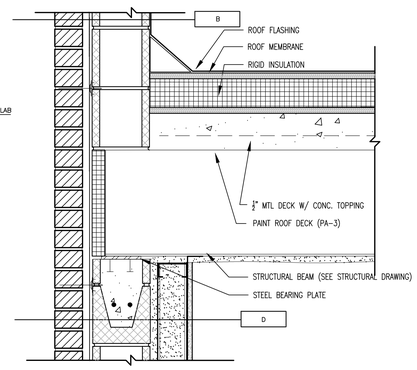

D1 A600 **DETAIL @ SOUTH BEAM POCKET**
SCALE: 1 1/2" = 1'-0"

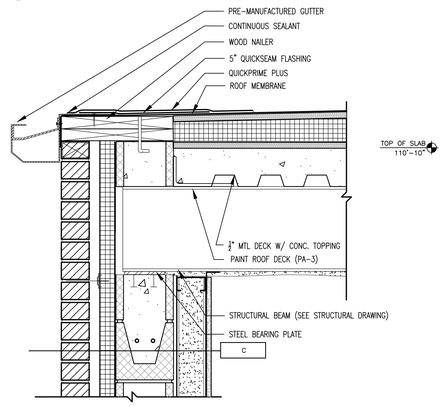

D3 A600 **DETAIL @ EAST WALL BEAM POCKET**
SCALE: 1 1/2" = 1'-0"

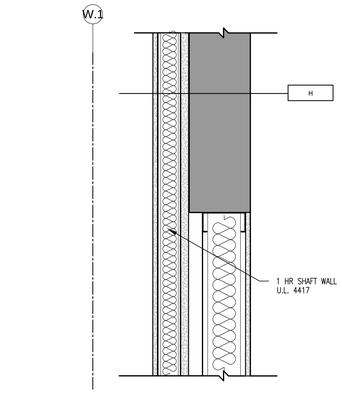

D5 A600 **DETAIL @ NORTH WALL**
SCALE: 1 1/2" = 1'-0"

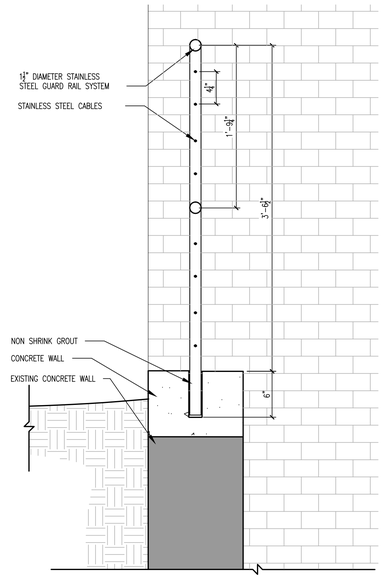

D7 A600 **DETAIL @ GUARD RAIL**
SCALE: 1 1/2" = 1'-0"

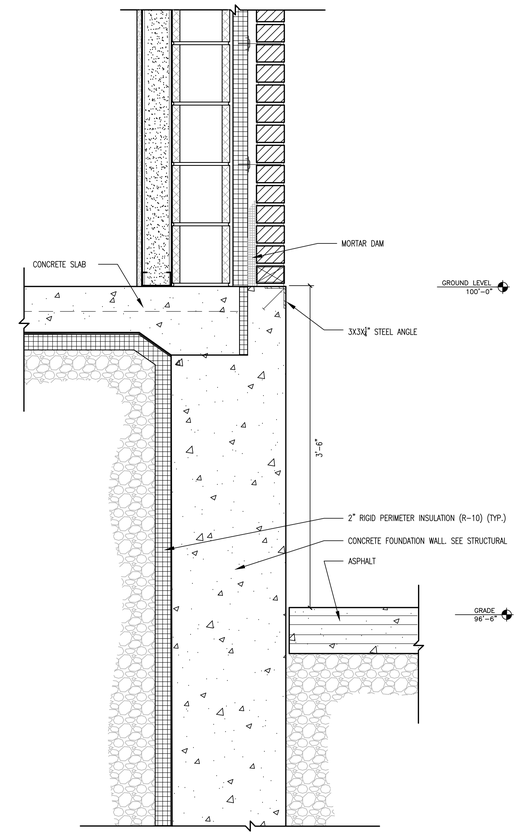

F9 A600 **DETAIL @ KNOCKOUT PANEL**
SCALE: 1 1/2" = 1'-0"

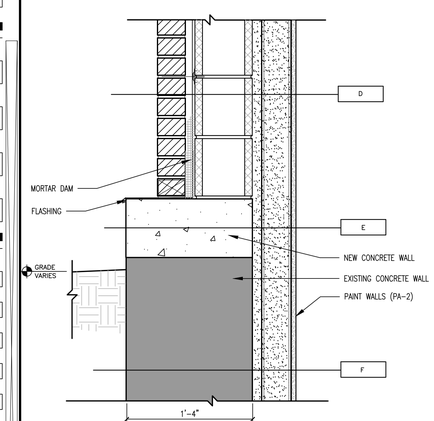

F1 A600 **DETAIL @ SOUTH WALL**
SCALE: 1 1/2" = 1'-0"

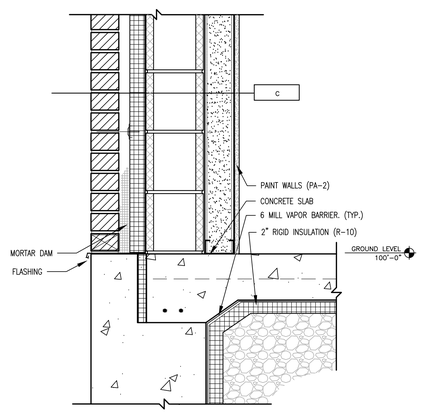

F3 A600 **DETAIL @ EAST WALL TYPICAL**
SCALE: 1 1/2" = 1'-0"

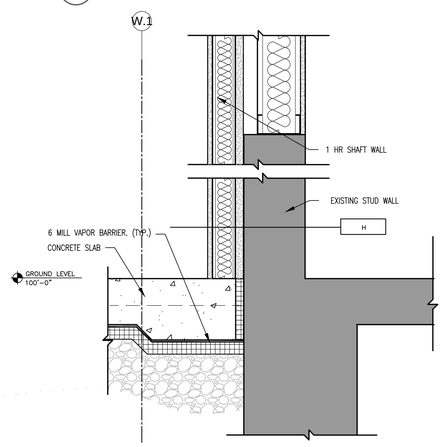

F5 A600 **DETAIL @ NORTH WALL**
SCALE: 1 1/2" = 1'-0"

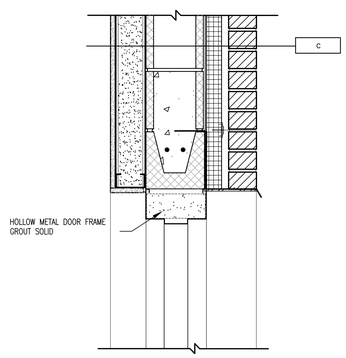

F7 A600 **DETAIL @ DOOR JAMB**
SCALE: 1 1/2" = 1'-0"

100% CONSTRUCTION DOCUMENTS

Revisions:	Date

CONSULTANTS:

ARCHITECT/ENGINEERS:

13100 watertown plank road
suite 200
elm grove, wi 53122

p 262.641.0746
f 888.600.6207

nagel architects

IBC ENGINEERING SERVICES INC.
N8 W22195 JOHNSON DR, STE 100
WAUKESHA, WI 53186
p 262.549.1190
fx 262.549.1620

Drawing Title: SECTION DETAILS

Approved Project Director

Project Title: Middleton VAH Construct Pharmacy Cache

Location: Madison, WI

Date: May 13, 2013

Checked: SAM

Drawn: AJS

Project Number: 607-13-101

Building Number: 19

Drawing Number: A600

Office of Construction and Facilities Management

Department of Veterans Affairs

VA FORM 08-6231

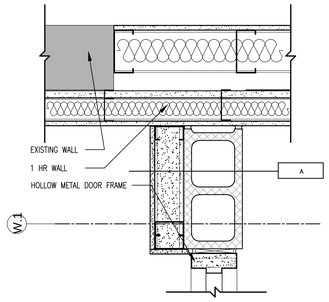

B1 A601 **DETAIL @ VESTIBULE DOOR JAMB**
SCALE: 1 1/2" = 1'-0"

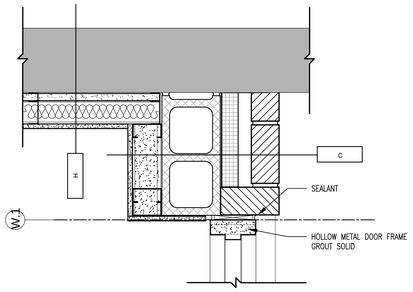

B3 A601 **DETAIL @ VESTIBULE DOOR JAMB**
SCALE: 1 1/2" = 1'-0"

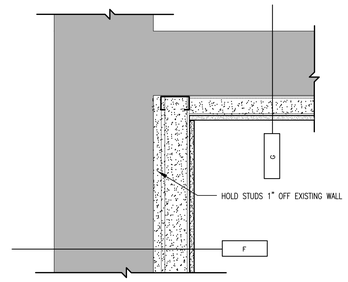

B5 A601 **DETAIL @ NORTH WEST CORNER**
SCALE: 1 1/2" = 1'-0"

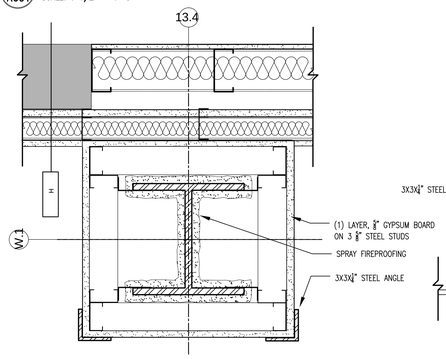

C1 A601 **DETAIL @ COLUMN AT WALL**
SCALE: 1 1/2" = 1'-0"

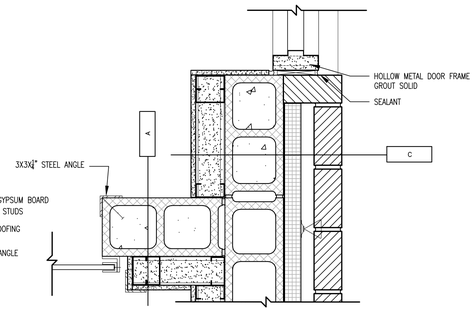

C3 A601 **DETAIL @ VESTIBULE DOOR JAMBS**
SCALE: 1 1/2" = 1'-0"

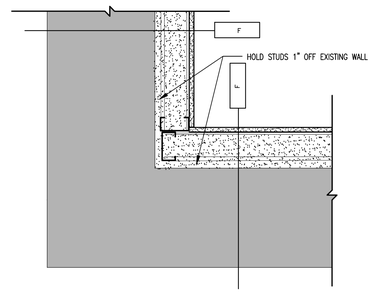

C5 A601 **DETAIL @ SOUTH WEST CORNER**
SCALE: 1 1/2" = 1'-0"

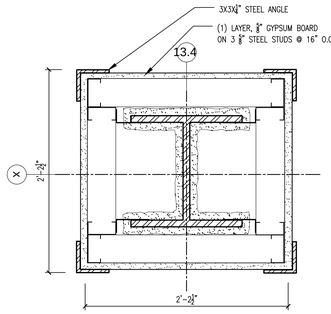

E1 A601 **DETAIL @ COLUMN**
SCALE: 1 1/2" = 1'-0"

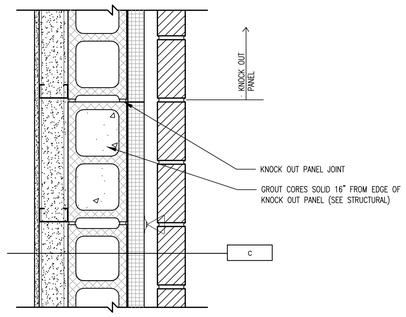

E3 A601 **DETAIL @ KNOCK OUT JOINT (OPP OTHER SIDE)**
SCALE: 1 1/2" = 1'-0"

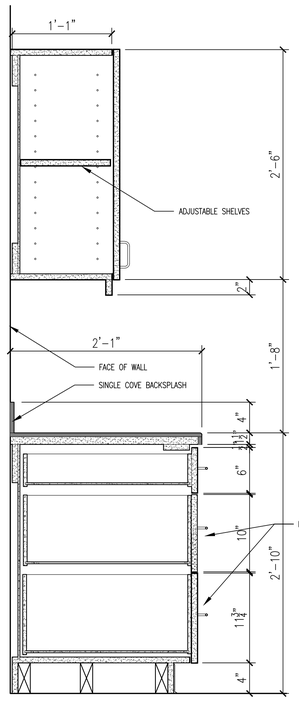

F5 A601 **DETAIL @ CASEWORK**
SCALE: 1 1/2" = 1'-0"

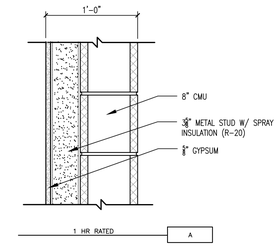

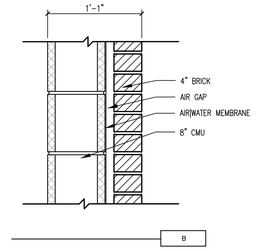

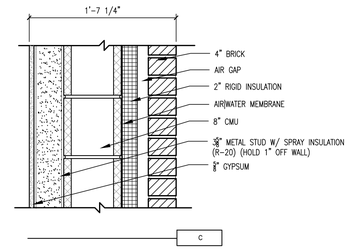

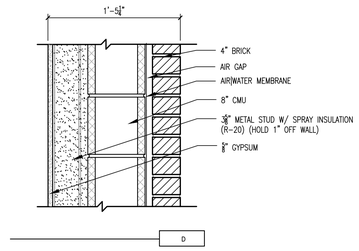

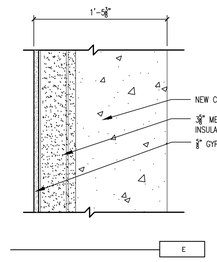

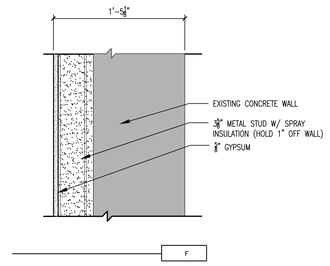

E8 A600 **EXTERIOR WALL TYPES**
SCALE: 1 1/2" = 1'-0"

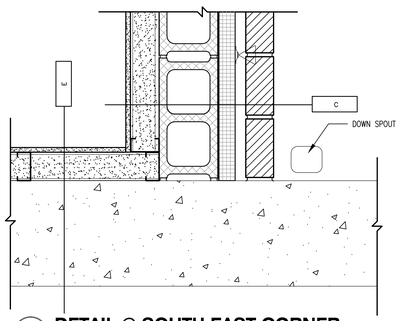

F1 A601 **DETAIL @ SOUTH EAST CORNER**
SCALE: 1 1/2" = 1'-0"

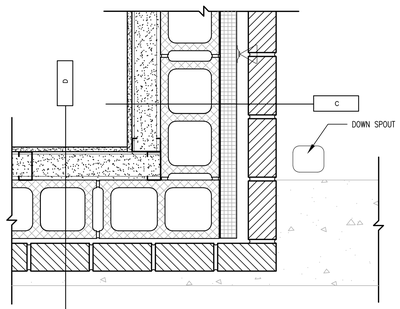

F3 A601 **DETAIL @ SOUTH EAST CORNER (ABOVE)**
SCALE: 1 1/2" = 1'-0"

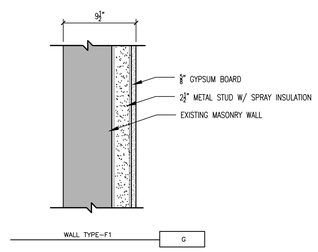

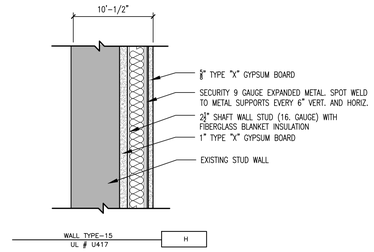

F8 A600 **INTERIOR WALL TYPES**
SCALE: 1 1/2" = 1'-0"

100% CONSTRUCTION DOCUMENTS

Revisions	Date

CONSULTANTS:

ARCHITECT/ENGINEERS:

13100 watertown plank road
suite 200
elm grove, wi 53122
p 262.641.0746
f 888.600.6207
nagel architects
IBC ENGINEERING SERVICES INC.
N8 W22195 JOHNSON DR, STE 120 262.549.1190
WAUKESHA, WI 53186 fx 262.549.1620

Drawing Title: PLAN DETAILS AND WALL TYPES

Approved Project Director

Project Title: Middleton VAH Construct Pharmacy Cache

Location: Madison, WI

Date: May 13, 2013 | Checked: SAM | Drawn: AJS

Project Number: 607-13-101

Building Number: 19

Drawing Number: A601

Office of Construction and Facilities Management

Department of Veterans Affairs

VA FORM 08-6231

three inches = one foot
one and one half inches = one foot
one inch = one foot
three quarters inch = one foot
one half inch = one foot
three eighths inch = one foot
one quarter inch = one foot
one eighth inch = one foot

STRUCTURAL NOTES

- DESIGN IS IN ACCORDANCE WITH THE 2011 WISCONSIN COMMERCIAL BUILDING CODE.
- THE INTENT OF THESE STRUCTURAL NOTES IS TO INDICATE INFORMATION THAT IS ROUTINELY UTILIZED. ADDITIONAL PROJECT REQUIREMENTS ARE LOCATED WITHIN THE PROJECT SPECIFICATIONS ALSO KNOWN AS THE PROJECT MANUAL. CONFLICTING INFORMATION BETWEEN THESE DRAWINGS AND THE PROJECT SPECIFICATIONS SHALL BE BROUGHT TO THE ATTENTION OF THE DESIGN TEAM AND CLARIFIED IN WRITING PRIOR TO SUBMITTING BIDS AND CHANGE ORDERS.
- RESISTANCE TO LATERAL LOADS ON STRUCTURE IS PROVIDED BY MASONRY AND CONCRETE SHEAR WALLS AND ROOF DIAPHRAGMS. CONTRACTOR SHALL PROVIDE SUFFICIENT TEMPORARY BRACING UNTIL ALL LATERAL SUPPORT SYSTEMS ARE IN PLACE AND FUNCTIONAL.
- ALL STRUCTURAL FRAMING AND CONNECTIONS HAVE BEEN DESIGNED FOR THE FINAL COMPLETED CONDITION AND HAVE NOT BEEN INVESTIGATED FOR POTENTIAL LOADINGS ENCOUNTERED DURING STEEL ERECTION AND CONSTRUCTION. ANY INVESTIGATION OF THE STRUCTURAL FRAMING AND CONNECTIONS FOR ADEQUACY DURING THE STEEL ERECTION AND CONSTRUCTION PROCESS IS THE SOLE RESPONSIBILITY OF THE CONTRACTOR.
- STRUCTURAL ITEMS SHALL NOT BE CUT, BENT, DRILLED, BORED OR OTHERWISE ALTERED UNLESS APPROVED BY ENGINEER OF RECORD.
- DIMENSIONS OF EXISTING CONSTRUCTION OR CONSTRUCTION IN PROGRESS SHALL BE VERIFIED AND COORDINATED PRIOR TO FABRICATION OF STRUCTURAL COMPONENTS.
- VERIFY AND COORDINATE, WITH ALL CONTRACTORS, THE LOCATION OF ALL ARCHITECTURAL AND MECHANICAL APPURTENANCES AND OPENINGS.
- CONTRACTOR IS RESPONSIBLE FOR ALL MEANS AND METHODS OF CONSTRUCTION AND ALL JOB SITE SAFETY.
- PROVISIONS ARE INCLUDED FOR THE FOLLOWING FUTURE ADDITIONS: 1 ADDITIONAL LEVEL. THE ROOF HAS BEEN DESIGNED FOR A FUTURE 3" CONCRETE TOPPING AND 100 PSF LIVE LOAD.

LOADING DESIGN CRITERIA

- SUPERIMPOSED DEAD LOADS:
  FUTURE ROOF 50 PSF
  TYPICAL UNLESS NOTED 10 PSF

  A LOAD ALLOWANCE FOR ITEMS INCLUDING FLOORING, CEILING, SPRINKLERS, DUCTWORK, PLUMBING AND OTHER MISCELLANEOUS COMPONENTS OF 5 PSF ARE INCLUDED IN THE ABOVE DEAD LOADS. THESE ITEMS SHALL BE SUPPORTED TO DISTRIBUTE THEIR LOAD EVENLY AND TO NOT EXCEED THIS UNIFORM LOADING.
- SUPERIMPOSED LIVE LOADS:

FLOOR	100 PSF
ROOF	100 PSF

- ROOF SNOW LOADS (ASCE 7-10):

GROUND SNOW LOAD	Pg =	30 PSF
FLAT ROOF SNOW LOAD	Pf =0.25 PSF	
EXPOSURE FACTOR	Ce =	1.00
IMPORTANCE CATEGORY IV	I =	1.20
THERMAL FACTOR	Ct =	1.00

- WIND LOADS (ASCE 7-10):

BASIC WIND SPEED (3-SECOND GUST)	Vult = 120 MPH Vasd = 90 MPH
RISK CATEGORY	IV
EXPOSURE CATEGORY	B
ENCLOSURE CLASSIFICATION	ENCLOSED
INTERNAL PRESSURE COEFFICIENTS	GCpi = +/- 0.18
WIND DIRECTIONALITY FACTOR	Kd = .85
WIND-BORNE DEBRIS REGION	NO
COMPONENT AND CLADDING PRESSURES	SEE SHEET S-001

- SEISMIC LOAD (ASCE 7-10):

RISK CATEGORY	IV
SEISMIC USE GROUP	I
DESIGN SPECTRAL RESPONSE COEFFICIENTS	SDS = 0.067 g SD1 = 0.052 g
SOIL SITE CLASS	C
SEISMIC DESIGN CATEGORY	A
BASIC SEISMIC FORCE RESISTING SYSTEM	REINFORCED CONCRETE AND MASONRY SHEAR WALLS
DESIGN BASE SHEAR	10 KIPS
ANALYSIS PROCEDURE	STATIC

6. MISCELLANEOUS LOADS

HAND RAILINGS: 50 PLF IN ANY DIRECTION AND 200 LBS IN ANY DIRECTION.
VEHICLE BARRIERS: 6000 LB HORIZONTAL LOAD IN ANY DIRECTION.

EARTHWORK AND FOUNDATIONS

- THE GEOTECHNICAL REPORT, REPORT NO. C13013 AND ALL SUPPLEMENTS AS PREPARED BY CGC AND DATED JANUARY 23, 2013 WAS USED AS THE BASIS OF FOUNDATION DESIGN.
- FOOTINGS SHALL BE CAST ON UNDISTURBED SUBSOIL OR COMPACTED FILL MEETING THE MINIMUM DESIGN CAPACITY NOTED ABOVE.
- SOIL SHALL MEET THE COMPACTION REQUIREMENTS AS DEFINED IN THE GEOTECHNICAL REPORT. IF IT IS NOT ENCOUNTERED AT THE ELEVATIONS SHOWN, CONSULT GEOTECHNICAL ENGINEER AND RESIDENT ENGINEER BEFORE PROCEEDING.
- NO HOLES, TRENCHES OR DISTURBANCES OF THE SOIL SHALL BE ALLOWED WITHIN THE VOLUME DESCRIBED BY 45 DEGREE LINES SLOPING FROM THE BOTTOM EDGE OF THE FOOTING. IF SUCH ARE REQUIRED, FOOTINGS MUST BE LOWERED.
- BACKFILL EVENLY ON EACH SIDE OF FOUNDATION WALLS AND RETAINING WALLS.
- DO NOT BACKFILL AGAINST BASEMENT WALLS UNTIL FLOOR SYSTEM IS IN PLACE AND FASTENED OR UNTIL WALLS ARE ADEQUATELY BRACED. BRACING SHALL BE DESIGNED BY THE CONTRACTOR.
- TOPSOIL OR FILL BELOW SLABS ON GRADE SHALL BE REMOVED. SUBGRADE UNDER SLABS SHALL BE BANKRUN GRAVEL COMPACTED TO 6 INCH LAYERS.
- BACKFILL AGAINST INTERIOR FOUNDATION WALLS SHALL BE BANKRUN GRAVEL COMPACTED TO MAXIMUM 6 INCH LAYERS.
- BACKFILL AGAINST EXTERIOR FOUNDATION WALLS SHALL BE BANKRUN GRAVEL COMPACTED TO MAXIMUM 6 INCH LAYERS.
- PROVIDE MINIMUM 24 INCHES OF WASHED STONE OVER ALL DRAIN TILES AND 4 INCHES BELOW.
- SEE GEOTECHNICAL REPORT NOTED ABOVE FOR RECOMMENDATIONS TO CONTROL GROUND WATER LEVELS DURING CONSTRUCTION.

ANCHORS AND FASTENERS

- INSTALLATION OF MECHANICAL AND ADHESIVE ANCHORS, FASTENERS AND SCREWS SHALL BE IN ACCORDANCE WITH MANUFACTURERS INSTRUCTIONS. INSTALLERS SHALL BE TRAINED BY THE MANUFACTURERS REPRESENTATIVE.
- EXPANSION, SLEEVE, SCREW AND ADHESIVE ANCHORS SHALL BE HILTI, INC., OR ENGINEER APPROVED SUBSTITUTION.

CONCRETE

- FORMWORK SHALL BE DESIGNED IN ACCORDANCE WITH THE ACI MANUAL OF STANDARD PRACTICE.
- REINFORCING STEEL SHALL BE DETAILED AND PLACED IN ACCORDANCE WITH THE ACI MANUAL OF STANDARD PRACTICE UNLESS OTHERWISE NOTED.
- CONTRACTOR SHALL PLACE CONCRETE ACCORDING TO ACI STANDARDS AND SPECIFICATIONS.
- CONTRACTOR SHALL BE AWARE OF COLD WEATHER CONCRETING PRACTICES AND HAVE COPIES OF NRMCA CIP 27 AND ACI 306R "COLD WEATHER CONCRETING".
- CONTRACTOR SHALL BE AWARE OF HOT WEATHER CONCRETING PRACTICES AND HAVE COPIES OF NRMCA CONCRETE IN PRACTICE (CIP) 12 AND ACI 305R "HOT WEATHER CONCRETING".
- LAP ALL WALL BARS WITH CLASS B SPLICES UNLESS OTHERWISE DETAILED. LAP WELDED WIRE MESH 6 INCHES.
- PROVIDE COLUMN AND WALL DOWELS OF THE SAME SIZE AND NUMBER AS THE RESPECTIVE COLUMN AND WALL REINFORCING UNLESS OTHERWISE DETAILED.
- PROVIDE TWO (2) #4 BARS AS STIRRUP CARRY BARS WHERE NO TOP STEEL IS AVAILABLE TO HOLD STIRRUPS.
- PROVIDE DRAWINGS OF PROPOSED CONDUIT AND PIPES TO BE EMBEDDED IN CONCRETE. WHEREVER AN APPROVED PIPE OR CONDUIT EXTENDS THROUGH A BEAM, PROVIDE ONE ADDITIONAL STIRRUP ON EACH SIDE OF THE OPENING.
- NON-PRESTRESSED CONCRETE PROTECTION FOR REINFORCING BARS SHALL BE DETAILED IN ACCORDANCE WITH ACI 318.
- SLABS ON GRADE SHALL BE CAST ALLOWING A SUFFICIENT NUMBER OF JOINTS TO ADEQUATELY CONTROL SHRINKAGE CRACKING. SAWCUTTING SHALL BE DONE AS SOON AS SAWCUT WILL NOT RAVEL CONCRETE OR WITHIN 16 HOURS MAXIMUM OF INITIAL POURING OPERATION. MAXIMUM SIZE OF PANELS 12 FT X 12 FT. GENERALLY, JOINTS SHALL OCCUR ON COLUMN CENTERLINES.
- WELDED WIRE MESH SHALL BE FLAT MANUFACTURED SHEETS. ROLLS ARE NOT PERMITTED.
- ALLOW AT LEAST 24 HOURS BEFORE POURING ADJACENT WALL SECTIONS BETWEEN CONSTRUCTION JOINTS. MAXIMUM LENGTH OF POUR TO BE 40 FEET, UNLESS CRACK INDUCERS ARE USED AS DETAILED ON THE DRAWINGS.
- CONTRACTOR SHALL NOTIFY THE RESIDENT ENGINEER AT LEAST 24 HOURS PRIOR TO PLACING CONCRETE.
- CONSTRUCTION JOINTS IN BEAMS, JOISTS, GIRDERS, OR SLABS TO BE LOCATED BETWEEN THE 1/4 POINT AND CENTERLINE OF THE SPAN, OR AS DIRECTED BY THE ENGINEER.
- DO NOT PLACE OR CUT HOLES IN CONCRETE SLABS, BEAMS, COLUMNS OR WALLS WITHOUT PRIOR APPROVAL OF THE ENGINEER.
- CONCRETE EXPOSED TO FREEZE THAW CYCLES SHALL BE AIR-ENTRAINED. MINIMUM AIR CONTENT SHALL BE 6 PERCENT. AIR CONTENT OF CONCRETE FOR SLABS WITH HARD TROWEL FINISH SHALL NOT EXCEED 3%.
- CAMBER CONCRETE MEMBERS FOR DEAD LOAD DEFLECTION BY ADJUSTING FORMS.
- PIPES AND CONDUITS EMBEDDED IN OR PASSING THROUGH STRUCTURAL MEMBERS MUST BE APPROVED BY THE STRUCTURAL ENGINEER. PIPE AND CONDUITS EMBEDDED IN CONCRETE SHALL NOT BE LARGER THAN 2 INCHES IN OUTSIDE DIAMETER AT THEIR WIDEST POINT OR FITTING OR 1/3 OF THE THICKNESS OF THE SLAB, BEAM OR WALL.
- ELECTRICAL CONDUIT OR PIPES EMBEDDED IN OR PASSING THROUGH FLOORS, WALLS OR BEAMS SHALL BE LOCATED AND PLACED SO THAT:
  1. THEY ARE NOT CLOSER THAN THREE DIAMETERS ON CENTER.
  2. THE CONCRETE COVER IS NOT LESS THAN 2".
  3. THEY RUN BETWEEN REINFORCING AND DO NOT DISPLACE IT IN ANY MANNER.
- NO ALUMINUM CONDUIT SHALL BE PLACED IN CONCRETE.
- CHAMFER ALL EXPOSED CONCRETE CORNERS. SEE ARCHITECTURAL/STRUCTURAL DRAWINGS FOR REQUIREMENTS.
- PROPER CURING PROCEDURES SHALL BE USED FOR SLAB-ON-GRADE TO PREVENT CURLING. SEE SPECIFICATIONS FOR ADDITIONAL INFORMATION.
- CALCIUM CHLORIDE SHALL NOT BE USED IN CONCRETE MIXES.
- PROVIDE WATERSTOPS AT ALL CONSTRUCTION JOINTS BELOW THE WATER TABLE AND AS SHOWN ON DRAWINGS. SEE SPECIFICATIONS FOR ADDITIONAL INFORMATION.
- CONTRACTOR SHALL INCLUDE ADDITIONAL CONCRETE FOR METAL DECK SLABS TO ACCOUNT FOR DEFLECTIONS IN DECK AND BEAMS.
- CONTRACTOR SHALL INCLUDE ADDITIONAL CONCRETE FOR SLABS AND BEAMS TO ACCOUNT FOR DEFLECTIONS IN FORMWORK.
- ALL CONCRETE COLUMNS AND BEAMS INTEGRATED WITH CONCRETE MASONRY UNITS NOMINALLY NOTED AS 8, 10 AND 12 INCH SHALL MATCH ACTUAL WIDTH OF CMU, 7-5/8, 9-5/8 AND 11-5/8 INCHES RESPECTIVELY.
- PROVIDE DOVETAIL ANCHORS BETWEEN MASONRY AND CONCRETE AT EVERY OTHER BED JOINT UNLESS NOTED OTHERWISE.
- CONTRACTOR SHALL BE RESPONSIBLE FOR QUANTITIES OF CONCRETE FOR FLAT SLABS, BEAMS AND COMPOSITE SLABS WHILE ACCOUNTING FOR DEFLECTIONS OF FORMWORK, STEEL BEAMS AND SHORING.

MATERIAL DESIGN CRITERIA

CONCRETE
MINIMUM 28 DAY STRENGTH SHALL BE:

FOOTING AND FOUNDATION WALLS	4000 PSI
SLABS ON GRADE	4000 PSI
TOPPING FOR METAL DECK	4000 PSI
STEEL BASE PLATE GROUT	7000 PSI

REINFORCING STEEL
1. PLAIN REINFORCING STEEL SHALL CONFORM TO ASTM A615 GRADE 60.
2. WELDABLE GRADE REINFORCING STEEL SHALL CONFORM TO ASTM A706 OR A496.
3. WELDED WIRE FABRIC SHALL CONFORM TO ASTM A185.
4. STAINLESS STEEL REINFORCING SHALL CONFORM TO ASTM A706 or A955.
5. SYNTHETIC FIBER REINFORCING SHALL CONFORM TO ASTM C1116.

CONCRETE MASONRY
1. CONCRETE MASONRY UNITS SHALL CONFORM TO ASTM C90 TYPE II, NORMAL WEIGHT UNITS.
2. MORTAR SHALL CONFORM TO ASTM C270 TYPE S ABOVE GROUND AND TYPE M BELOW GROUND.
3. MASONRY GROUT SHALL CONFORM TO ASTM C476 MINIMUM COMPRESSIVE STRENGTH f'c = 3000 PSI.
4. CONCRETE MASONRY UNITS NET AREA COMPRESSIVE STRENGTH OF 3750 PSI.

COLD-FORMED STEEL DECKING
1. STEEL MATERIAL SHALL CONFORM TO ASTM A653, 33 KSI.

STRUCTURAL STEEL
1. STRUCTURAL STEEL W-SHAPES SHALL CONFORM TO ASTM A992, GRADE 50.
2. STRUCTURAL STEEL PLATES, ANGLES, CHANNELS, AND OTHER ROLLED MEMBERS SHALL CONFORM TO ASTM A36.
3. RECTANGULAR AND SQUARE MEMBERS SHALL CONFORM TO ASTM A500 GRADE B, Fy = 46 KSI.
4. ROUND HSS MEMBERS SHALL CONFORM TO ASTM A500 GRADE B, Fy = 42 KSI.
5. STEEL PIPE SHALL CONFORM TO A53 GRADE B.
6. STEEL HEADED STUDS SHALL CONFORM TO ASTM A108 GRADE 1015, 1017 OR 1020, Fy = 50 KSI.
7. STEEL STUDS FOR SHEAR RAIL REINFORCMENT SHALL CONFORM TO ASTM A1044.
8. STEEL ANCHOR RODS SHALL CONFORM TO ASTM F1554, GRADE 36.
9. STEEL BOLTS SHALL CONFORM TO ASTM A325.
10. STEEL EYEBOLTS SHALL CONFORM TO ASTM A489.
11. STEEL NUTS SHALL CONFORM TO ASTM A563.
12. STEEL WASHERS SHALL CONFORM TO ASTM F436.
13. TWIST-OFF-TYPE TENSION CONTROL STRUCTURAL BOLT, NUT AND WASHER ASSEMBLIES SHALL CONFORM TO ASTM F1852.
14. COMPRESSIBLE-WASHER-TYPE DIRECT TENSION INDICATORS FOR USE WITH STRUCTURAL FASTENERS SHALL CONFORM TO ASTM F959.

STRUCTURAL STAINLESS STEEL
1. STAINLESS STEEL STRUCTURAL ANGLES, TEES AND PLATES SHALL CONFORM TO ASTM A276 ALLOY 304.
2. STAINLESS STEEL HOLLOW STRUCTURAL SHAPES (HSS) SHALL CONFORM TO ASTM A1016 ALLOY 304.
3. STAINLESS STEEL BOLTS SHALL CONFORM TO ASTM F593 ALLOY 304.
4. STAINLESS STEEL NUTS AND WASHERS SHALL CONFORM TO ASTM F594 ALLOY 304.
5. STAINLESS STEEL WIRE ROPE SHALL CONFORM TO ASTM A492.

FOUNDATIONS
1. SHALLOW FOUNDATIONS
   A. NET ALLOWABLE BEARING CAPACITY FOR SPREAD FOOTINGS IS 2500 PSF.

CONCRETE MASONRY

- NET AREA COMPRESSIVE STRENGTH OF CONCRETE MASONRY WALLS (f'm) IS EQUAL TO 2500 PSI BASED ON THE CMU STRENGTH AND MORTAR SHOWN ABOVE.
- PRODUCTION AND CONSTRUCTION OF CONCRETE MASONRY SHALL BE IN ACCORDANCE WITH THE BUILDING CODE REQUIREMENTS FOR CONCRETE MASONRY STRUCTURE, ACI 530.1, LATEST EDITION, AND THE NCMA TECHNICAL GUIDE.
- COLD WEATHER CONSTRUCTION SHALL BE IN COMPLIANCE WITH NCMA "RECOMMENDED PRACTICES AND GUIDE SPECIFICATIONS FOR COLD WEATHER MASONRY AND CONSTRUCTION."
- HOT WEATHER CONSTRUCTION SHALL BE IN COMPLIANCE WITH NCMA "RECOMMENDED PRACTICES AND GUIDE SPECIFICATIONS FOR HOT WEATHER MASONRY AND CONSTRUCTION."
- THIS BUILDING IS CLASSIFIED AS A ESSENTIAL FACILITY AND THERFORE REQUIRES A LEVEL C QUALITY ASSURANCE PROGRAM. SEE SPECIFICATIONS FOR ADDITIONAL INFORMATION.
- MASONRY UNITS SHALL BE LAID IN RUNNING BOND UNLESS NOTED OTHERWISE.
- STRENGTH OF CONCRETE MASONRY SHOWN IS BASED ON NET AREA OF UNIT.
- ALL MASONRY SHALL BE NORMAL WEIGHT UNITS IN ACCORDANCE WITH ACI.
- CALCIUM CHLORIDE OR ADMIXTURES CONTAINING CALCIUM CHLORIDE SHALL NOT BE USED.
- PROVIDE DOVETAIL ANCHORS BETWEEN MASONRY AND STEEL AND/OR CONCRETE AT EVERY OTHER BED JOINT UNLESS NOTED OTHERWISE.
- MASONRY WALLS SHALL BE ADEQUATELY BRACED TO RESIST WIND FORCES UNTIL PERMANENT DESIGN SUPPORTS ARE IN PLACE AND FUNCTIONAL. BRACING SHALL BE DESIGNED BY THE CONTRACTOR IN ACCORDANCE WITH THE "STANDARD PRACTICE FOR BRACING MASONRY WALLS UNDER CONSTRUCTION".
- PROVIDE DOWELS INTO FOUNDATION THE SAME SIZE AND NUMBER AS WALL REINFORCING.
- LAP REINFORCING BARS 48 DIAMETERS UNO.
- CONCRETE MASONRY WALL SHALL BE REINFORCED AT EVERY OTHER BED JOINT WITH 9 GAGE LADDER TYPE JOINT REINFORCEMENT UNLESS NOTED OTHERWISE.
- EXTEND BED JOINT REINFORCING INTO CONCRETE COLUMNS 6 INCHES UNLESS DOVETAILS ANCHORS ARE UTILIZED.
- GROUT STOP DEVICES SHALL BE METAL LATH OR PLASTIC SCREENING. SOLID SHEET MATERIAL SHALL NOT BE USED.
- VERTICAL BARS SHOWN ON THE DESIGN DRAWINGS SHALL BE PLACED IN A CONTINUOUS UNOBSTRUCTED CELL OF NOT LESS THAN 3 INCHES BY 4 INCHES.
- ALL VERTICAL BARS SHALL BE HELD IN POSITION TO PREVENT DISPLACEMENT BEYOND THE TOLERANCES ALLOWED BY CONSTRUCTION LOADS OR BY PLACEMENT OF GROUT OR MORTAR.
- ALL CELLS CONTAINING REINFORCING SHALL BE GROUTED SOLID.
- ALL BOND BEAM AND PILASTER SHALL BE REINFORCED AS SHOWN ON THE DESIGN DRAWINGS AND FILLED WITH GROUT.
- PROVIDE CONTINUOUS BOND BEAMS REINFORCED WITH 2-#5 AT ANCHORAGE OF BRICK SUPPORT ANGLES.
- PROVIDE A CONTINUOUS BOND BEAM WITH 2-#5 AT TOP AND BOTTOM OF WINDOWS, UNO.
- PROVIDE A CONTINUOUS BOND BEAM AT TOP OF WALLS WITH 2-#5, UNO.
- ALL DOOR AND WINDOW JAMBS SHALL CONTAIN 1-#5 (MINIMUM) FULL HEIGHT OF WALL AND BE GROUTED SOLID 8 INCHES WIDE UNLESS SHOWN OTHERWISE.
- PROVIDE A CONTINOUS BOND BEAM WITH 2-#5 AT ALL BEARING ELEVATIONS, UNO.
- WHERE NOT SHOWN OTHERWISE, MINIMUM SOLID GROUTED MASONRY BELOW BEAM REACTIONS SHALL BE 16 INCHES DEEP BY 32 INCHES LONG.
- WHERE NOT SHOWN OTHERWISE, MINIMUM SOLID GROUTED MASONRY BELOW LINTEL REACTIONS SHALL BE 16 INCHES DEEP BY 16 INCHES LONG.
- MASONRY IN CONTACT WITH SOIL SHALL HAVE ALL ADJACENT CELLS FULLY GROUTED.
- AT GROUTED CELLS PROVIDE FULL BED JOINTS AROUND CELL PERIMETER.
- CONTROL JOINTS IN MASONRY WALLS SHALL BE PROVIDED AND SPACED NO GREATER THAN 25 FEET ON CENTER OR MORE THAN 12 FEET FROM A BUILDING CORNER. CONTROL JOINT SHALL ALSO BE PROVIDED NEAR WALL OPENING JAMBS AT WALL INTERSECTIONS, AND AT CHANGES IN WALL HEIGHT. CONTROL JOINTS SHALL NOT BE LOCATED WITHIN GROUTED AREA BENEATH BEAM REACTIONS.
- FOR CAVITY WALL CONSTRUCTION, OFFSET CONTROL JOINTS IN CMU FROM CONTROL JOINTS IN BRICK VENEER BY 12 FT +/-, UNO.
- SEE ARCHITECTURAL DRAWINGS FOR BRICK CONTROL JOINT LOCATIONS.
- PROVIDE 3 INCH MINIMUM CLEANOUTS IN THE BOTTOM COURSE OF MASONRY FOR EACH GROUT POUR WHEN THE WALL AND GROUT POUR HEIGHT EXCEEDS 5 FEET. IN SOLID GROUTED MASONRY, SPACE CLEANOUTS HORIZONTALLY A MAXIMUM OF 32 INCHES ON CENTER.
- MAXIMUM GROUT POUR HEIGHT IS BASED ON THE GROUT SPACE REQUIREMENTS OF THE SPECIFICATION FOR MASONRY STRUCTURES.
- THE TOP OF A GROUT POUR OR COLD JOINT SHALL NOT BE LOCATED WITHIN 1-1/2 INCHES OF A BED JOINT WHEN MULTIPLE GROUT LIFTS ARE USED.
- CONSOLIDATE GROUT AT THE TIME OF PLACEMENT.
- WHEN THE GROUT LIFT HEIGHT EXCEEDS 12.67 FEET, THE CONTRACTOR SHALL PROVIDE A "GROUT DEMONSTRATION PANEL" THAT SHALL BE APPROVED BY THE PERMITTING AGENCY, OWNER, ENGINEER AND ARCHITECT PRIOR TO ENGAGING IN GROUT PLACEMENT.
- COORDINATE WITH THE ELECTRICAL CONTRACTOR THE GROUTING OF CONDUIT IN CORES.
- CONDUITS, PIPES AND SLEEVES OF ANY MATERIAL TO BE EMBEDDED IN MASONRY SHALL BE COMPATIBLE WITH THE MASONRY. ALUMINUM PRODUCTS SHALL NOT BE USED.
- CONDUITS, PIPES AND SLEEVES IN MASONRY SHALL BE NO CLOSER THAN 3 DIAMETERS ON CENTER. ALL HORIZONTAL CONDUITS TO BE ROUTED IN BOND BEAMS.
- VERTICAL CONDUIT, PIPING, ETC. SHALL BE LOCATED IN CELLS NOT CONTAINING REINFORCEMENT. CONDUIT, PIPING, ETC. SHOULD NEVER BE TIED TO REINFORCEMENT; PROVIDE VERTICAL BAR POSITIONERS.
- NO PENETRATIONS FOR MEP, IT, ETC. ARE ALLOWED WITHIN 40-INCHES OF ENDS OF SHEARWALLS UNO WITHOUT WRITTEN APPROVAL FROM THE STRUCTURAL ENGINEER. SEE PLANS FOR LOCATIONS OF SHEARWALL END REINFORCEMENT ZONES.
- NO PENETRATIONS FOR MEP, IT, ETC. ARE ALLOWED AT LINTEL BEARING LOCATIONS, THROUGH LINTELS/BOND BEAMS, IN CMU PIERS, AT DOOR JAMBS, OR WITHIN 8-INCHES OF A CMU CONTROL JOINT UNO WITHOUT WRITTEN APPROVAL FROM THE STRUCTURAL ENGINEER.
- ANY OPENING OR A GROUP OF OPENINGS THROUGH LOAD BEARING OR SHEARWALLS REQUIRING PENETRATION GREATER THAN 8-INCHES BY 8-INCHES THAT ARE NOT SHOWN EXPLICITLY WITH LINTEL CALLOUTS ON THE STRUCTURAL DRAWINGS SHALL BE APPROVED BY THE STRUCTURAL ENGINEER TWO WEEKS PRIOR TO CONSTRUCTION OF THE WALL.

STRUCTURAL STEEL

- STRUCTURAL STEEL SHALL BE DETAILED, FABRICATED, AND ERECTED IN ACCORDANCE WITH THE AISC "STEEL CONSTRUCTION MANUAL," FOURTEENTH EDITION AND THE AISC "CODE OF STANDARD PRACTICE FOR STEEL BUILDINGS AND BRIDGES," APRIL 14, 2010 EDITION.
- THE STRUCTURAL STEEL FABRICATOR SHALL BE AISC CERTIFIED.
- [ALL STRUCTURAL AND MISCELLANEOUS STEEL WHICH SHALL REMAIN EXPOSED TO VIEW SHALL BE FABRICATED AND ERECTED IN ACCORDANCE WITH THE AISC "SPECIFICATION FOR ARCHITECTURALLY EXPOSED STRUCTURAL STEEL" WITHOUT GAPS OR OPEN JOINTS.]
- STEEL JOIST FABRICATION AND ERECTION SHALL CONFORM TO THE STANDARD SPECIFICATIONS OF THE STEEL JOIST INSTITUTE. JOISTS SHALL BE MANUFACTURED WITH HOT-ROLLED TOP AND BOTTOM CHORD MEMBERS.
- STEEL DECK FABRICATION AND ERECTION SHALL CONFORM TO THE STANDARD SPECIFICATIONS OF THE STEEL DECK INSTITUTE.
- ALL WELDING SHALL COMPLY WITH AWS D1.1 USING E70XX ELECTRODES. ALL WELDING TO BE DONE BY AWS PREQUALIFIED WELDERS, CERTIFIED FOR WELDS MADE. PROVIDE CONTINUOUS MINIMUM SIZED WELDS PER AISC REQUIREMENTS, UNLESS NOTED OTHERWISE.
- ALL WELDING SHALL COMPLY WITH AWS D1.6 USING E316-XX ELECTRODES.
- THE MINIMUM SIZE OF FILLET WELDS SHALL BE AS SPECIFIED IN TABLE J2.4 IN THE AISC MANUAL OF STEEL CONSTRUCTION.
- MINIMUM STRENGTH OF WELDED CONNECTIONS: UNLESS NOTED OTHERWISE ON THE DRAWINGS, ALL SHOP AND FIELD WELDS SHALL DEVELOP THE FULL TENSILE STRENGTH OF THE MEMBER OF ELEMENT JOINED. ALL MEMBERS WITH MOMENT CONNECTIONS, NOTED ON THE DRAWINGS, SHALL BE WELDED TO DEVELOP THE FULL FLEXURAL CAPACITY OF THE MEMBER, UNLESS NOTED OTHERWISE ON THE DRAWINGS.
- BOLTED CONNECTIONS SHALL BE MADE WITH A MINIMUM OF TWO HIGH STRENGTH BOLTS (MIN 3/4 INCH DIAMETER). CONNECTIONS SHALL BE DESIGNED TO SUPPORT, AT A MINIMUM, ONE-HALF THE TOTAL UNIFORM LOAD CAPACITY SHOWN IN THE AISC TABLES OF UNIFORM LOAD CONSTANTS FOR THE GIVEN BEAM, SPAN, AND STEEL SPECIFIED, UNLESS OTHERWISE DETAILED OR NOTED. BEAM-TO-BEAM AND BEAM-TO-COLUMN FRAMING CONNECTIONS SHALL BE MADE WITH DOUBLE ANGLES UNLESS OTHERWISE DETAILED OR NOTED.
- WHERE SPECIFIC CONNECTION FORCES AND MOMENTS ARE SHOW IN THE DRAWINGS, THE CONNECTIONS SHALL BE DESIGNED FOR SUCH MINIMUM LOADS IN ACCORDANCE WITH THE AISC MANUAL OF STEEL CONSTRUCTION.
- BOLTS SHALL BE TIGHTED SNUG-TIGHT PLUS ONE-HALF TURN UNLESS NOTED OTHERWISE OR BE TWIST-OFF-TYPE TENSION CONTROL STRUCTURAL BOLT, NUT AND WASHER ASSEMBLIES.
- ALL STRUTS, HANGERS, AND BRACES SHALL HAVE CONNECTIONS DESIGNED TO DEVELOP THE FULL ALLOWABLE TENSILE STRENGTH OF THE MEMBER UNLESS THE DESIGN FORCE IS INDICATED ON THE DRAWINGS, IN WHICH CASE THE CONNECTIONS SHALL BE DESIGNED FOR THE FORCE INDICATED.
- COLUMN BASE PLATES SHALL HAVE OVERSIZED HOLES WITH PLATE WASHERS (MIN 3/8-INCH THICK) PROVIDED WITH ANCHOR RODS.
- GROUT UNDER BASE PLATES IN ACCORDANCE WITH THE AISC "CODE OF STANDARD PRACTICE FOR STEEL BUILDINGS AND BRIDGES."
- WHERE BEAMS SUPPORT JOISTS FROM ONLY ONE SIDE, JOIST SEAT SHALL EXTEND ONE INCH BEYOND BEAM CENTERLINE.
- JOIST SHALL BE DESIGNED FOR NET UPLIFT SPECIFIED ABOVE. SUPPLIER SHALL PROVIDE ALL ADDITIONAL BRIDGING AND BRACING. IN ADDITION, BRIDGING STANDARD WITH THE MANUFACTURER AND COMPLYING WITH THE APPLICABLE STEEL JOIST INSTITUTE SPECIFICATION OF LATEST ADOPTION SHALL BE USED FOR BRIDGING ALL JOISTS FURNISHED BE THE MANUFACTURER.
- METAL DECK SHALL BE GALVANIZED WITH A MINIMUM G-90 COATING PER ASTM A653.
- METAL DECK SHALL BE LAID OUT AND INSTALLED TO HAVE A MINIMUM OF 3 CONTINUOUS SPANS. IF LESS THAN THE MINIMUM IS REQUIRED, PROVIDE THICKER GAGE DECK AS REQUIRED.
- ROOF DECK SHALL BE AS INDICATED ON THE DRAWINGS UNO.
- STEEL FLOOR DECK SHALL BE FASTENED TO ALL STRUCTURAL SUPPORTS BY WELDING. SPACING OF FASTENERS SHALL BE 4 WELDS PER 36 INCH SHEET WIDTH. WELDS SHALL BE 5/8 INCH DIAMETER PUDDLE WELDS.
- STEEL HEADED STUD LENGTH FOR COMPOSITE BEAMS SHALL BE 1-1/2 INCHES ABOVE THE COMPOSITE DECK UNLESS NOTED OTHERWISE.
- CLEAN, PREPARE, AND SHOP PRIME EXTERIOR EXPOSED STRUCTURAL STEEL MEMBERS IN ACCORDANCE WITH S.S.P.C. STANDARDS SP-1 AND SP-6.
- CLEAN, PREPARE, AND SHOP PRIME INTERIOR EXPOSED STRUCTURAL STEEL MEMBERS IN ACCORDANCE WITH S.S.P.C. STANDARDS SP-1 AND SP-3.
- WHILE THE DESIGN DOCUMENTS MAY REFERENCE OSHA, THEY ARE NOT INTENDED TO SPECIFICALLY IDENTIFY ALL APPLICABLE OSHA REQUIREMENTS. IT IS THE CONTRACTORS RESPONSIBILITY TO IDENTIFY AND COMPLY WITH ALL APPLICABLE OSHA REQUIREMENTS.
- ALL STEEL SHALL BE POSITIONED WITH THE NATURAL CAMBER OR INDUCED CAMBER TURNED UP.
- REFER TO ARCHITECTURAL SHEETS FOR STRUCTURAL STEEL AND DECK TO BE FIREPROOFED.
- THE THICKNESS OF THE FIREPROOFING MATERIAL SHALL BE BASED ON STEEL MEMBER SIZES, FIREPROOFING MATERIAL AND THE HOURLY RESISTANCE RATING SPECIFIED ABOVE. CALCULATIONS TO SPECIFY THE REQUIRED THICKNESS SHALL BE PERFORMED.
- REFER TO ARCHITECTURAL DRAWINGS FOR ADDITIONAL MISCELLANEOUS STEEL.

COLD-FORMED STEEL FRAMING

- DESIGN, FABRICATION, AND ERECTION OF COLD-FORMED STEEL FRAMING SHALL BE IN ACCORDANCE WITH THE AISI DESIGN MANUAL AS AMENDED TO DATE. ALL FRAMING MEMBERS SHOWN ON PLANS ARE SCHEMATIC AND ARE SHOWN FOR INTENT ONLY. (ASSUMES THAT THE DESIGN AND CALCULATIONS WILL BE REVIEWED BY GRAEF.)
- STEEL STUD CURTAIN WALL AND CONNECTIONS TO BE DESIGNED BY SUPPLIER. (STEEL STUD CURTAIN WALL AND CONNECTION DESIGN SHALL BE SEALED BY PROFESSIONAL STRUCTURAL ENGINEER EXPERIENCED IN THIS WORK AND REGISTERED IN THE STATE OF WISCONSIN.
- MIMINIUM DESIGN THICKNESS OF STUDS AND TRACK AT EXTERIOR OF BUILDING VERTICALLY NOT SUPPORTING MASONRY SHALL BE 6-INCHES (GAGE: 20).
- LOAD BEARING STUDS NOT VERTICALLY SUPPORTING MASONRY SHALL BE DESIGNED TO CARRY AL

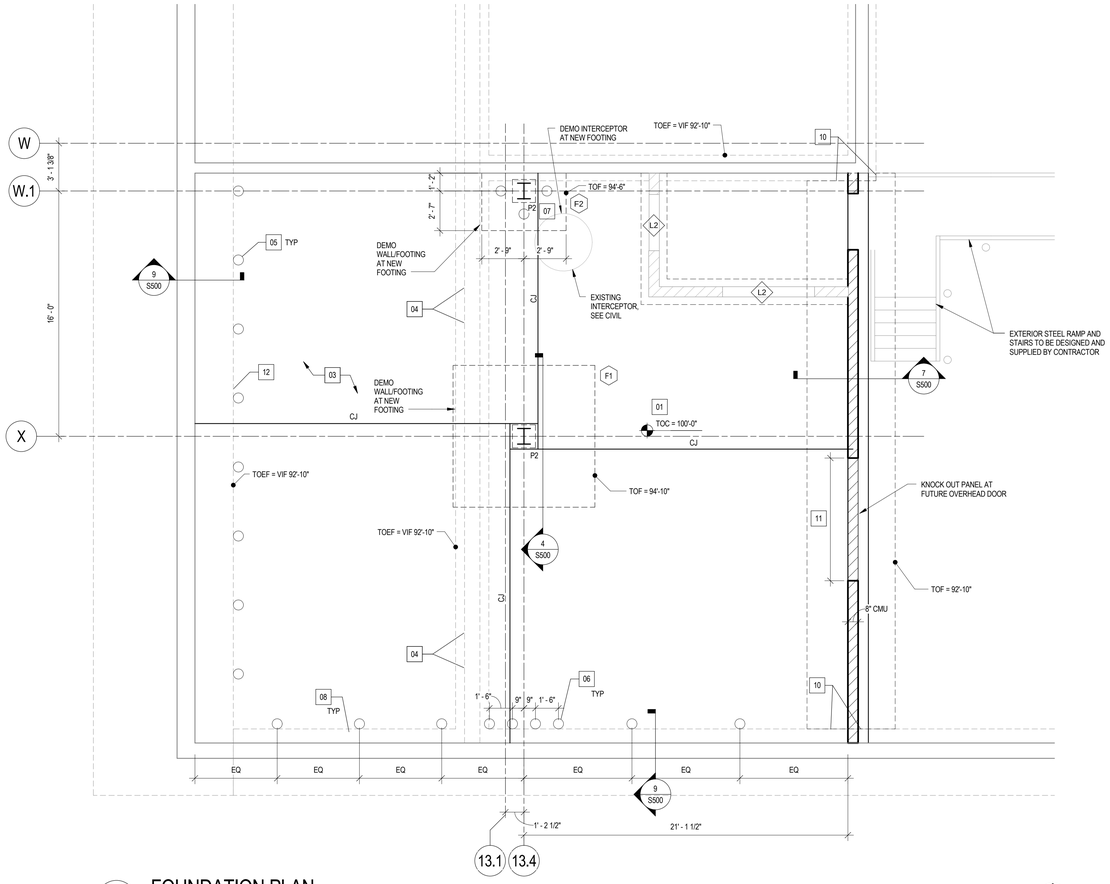

1 FOUNDATION PLAN

1/4" = 1'-0"

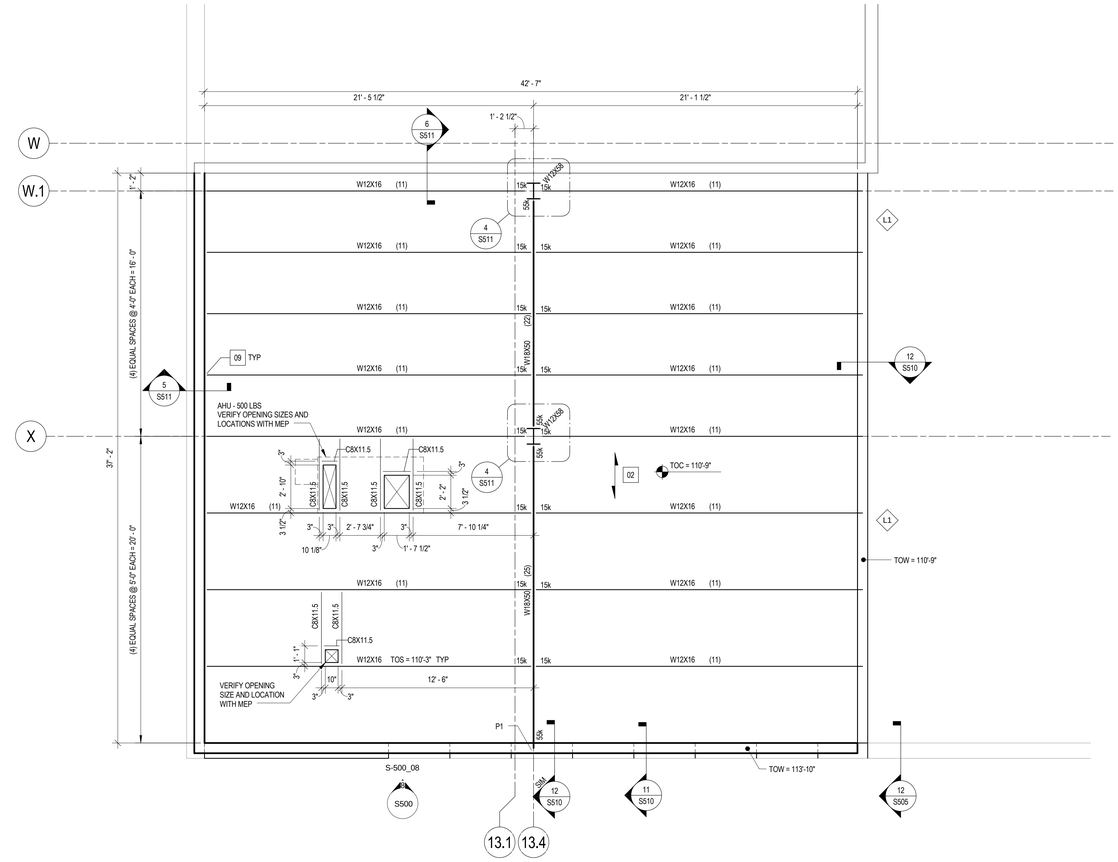

2 ROOF LEVEL FRAMING PLAN

1/4" = 1'-0"

FOOTING SCHEDULE		
MARK	SIZE	REINFORCING
F1	9'-6" x 9'-6" x 1'-9"	(9) #8 E.W. BOTTOM
F2	SEE PLAN x 1'-6"	#8@10" MAX, E.W. BOTTOM

CONCRETE PIER SCHEDULE				
MARK	SIZE	REINFORCING		REMARKS
	WxL	VERTICALS	TIES	
P1	8"x32"	6 - #5	#3@8"	SEE DETAIL 11/S505
P2	18"x18"	8 - #8	#4@12"	SEE DETAIL 10/S500

L1 = HSS8x8x1/2 WITH L7x4x3/8 AND 16" BEARING EACH SIDE, SEE DETAIL 3/S100.

L2 = 16" DEEP BOND BEAM WITH (2) #5 BOTTOM BARS. SEE DETAIL 4/S100.

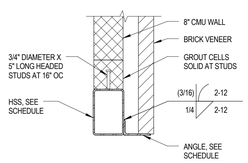

3 DETAIL

3/4" = 1'-0"

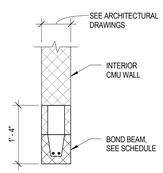

4 DETAIL

3/4" = 1'-0"

KEYNOTES

01	5" CONCRETE SLAB ON GRADE, REINFORCED WITH POLY PROPYLENE FIBERS (1.5 LB/CU YARD FIBER REINFORCEMENT). TOP OF SLAB ELEVATION = 100'-0" UNLESS NOTED OTHERWISE ON PLAN. PROVIDE VAPOR BARRIER UNDER SLAB ON GRADE, UNO.
02	TYPICAL COMPOSITE SLAB ON METAL DECK = 4 1/2" NW CONCRETE OVER 1 1/2" x 18 GAGE COMPOSITE METAL DECK (6" TOTAL THICKNESS). REINFORCE WITH 6x6-W2.1xW2.1 WELDED WIRE FABRIC.
03	CAREFULLY DEMOLISH THE EXISTING SLAB ON GRADE FOR THE INSTALLATION OF THE NEW SLAB ON GRADE WITH A VAPOR BARRIER.
04	CAREFULLY DEMOLISH THE TOP OF THE EXISTING CONCRETE WALL TO ALLOW FOR THE INSTALLATION OF THE NEW FOOTINGS AND SLAB ON GRADE WITH VAPOR BARRIER.
05	PROVIDE HELICAL ANCHORS OR MICROPILE UNDER EACH BEAM ABOVE. HELICAL ANCHOR OR MICROPILE SHALL BE DESIGNED BY SUPPLIER TO SUPPORT 30 KIPS (UNFACTORED) DOWNWARD FORCES. CONTRACTOR PERFORMING THIS WORK SHALL SUMIT WRITTEN VERIFICATION TO RESIDENT ENGINEER CERTIFYING A MINIMUM OF 5 YEARS OF EXPERIENCE IN THIS TYPE OF WORK.
06	PROVIDE AT LEAST FOUR HELICAL ANCHORS OR MICROPILE UNDER GIRDER ABOVE. HELICAL ANCHORS OR MICROPILE SHALL BE DESIGNED BY SUPPLIER TO SUPPORT A TOTAL OF 105 KIPS (UNFACTORED) DOWNWARD FORCES. CONTRACTOR PERFORMING THIS WORK SHALL SUMIT WRITTEN VERIFICATION TO RESIDENT ENGINEER CERTIFYING A MINIMUM OF 5 YEARS OF EXPERIENCE IN THIS TYPE OF WORK.
07	PROVIDE AT LEAST THREE HELICAL ANCHORS OR MICROPILE UNDER GIRDER ABOVE. HELICAL ANCHORS OR MICROPILE SHALL BE DESIGNED BY SUPPLIER TO SUPPORT A TOTAL OF 105 KIPS (UNFACTORED) DOWNWARD FORCES. CONTRACTOR PERFORMING THIS WORK SHALL SUMIT WRITTEN VERIFICATION TO RESIDENT ENGINEER CERTIFYING A MINIMUM OF 5 YEARS OF EXPERIENCE IN THIS TYPE OF WORK.
08	PROVIDE HELICAL ANCHORS OR MICROPILE. HELICAL ANCHORS OR MICROPILE SHALL BE DESIGNED BY SUPPLIER TO SUPPORT 10 KIPS (UNFACTORED) DOWNWARD FORCES. CONTRACTOR PERFORMING THIS WORK SHALL SUMIT WRITTEN VERIFICATION TO RESIDENT ENGINEER CERTIFYING A MINIMUM OF 5 YEARS OF EXPERIENCE IN THIS TYPE OF WORK.
09	PROVIDE DOUBLE ANGLE CONNECTION TO EXISTING WALL AT EACH BEAM. SEE DETAIL 5/S511.
10	DOWEL #5 x 2'-8" @ 12" OC INTO EXISTING CONCRETE WALL AND FOOTING.
11	PROVIDE 1" DIA x 1'-4" SMOOTH DOWEL AT 12" OC AT OVERHEAD DOOR. GREASE SIDE INTO SLAB ON GRADE. SHIFT THERMAL BREAK AS SHOWN BY ARCHITECTURAL DRAWINGS.
12	IF MICRO PILES ARE UTILIZED, THE REINFORCEMENT AND CONCRETE ABOVE THE FOOTING SHOWN ON 9/S500 WILL NOT BE REQUIRED. THE CONTRACTOR SHALL SUBMIT A DETAIL SHOWING CORING AND INSTALLATION THROUGH THE TOP OF THE FOOTING AT THE WALL FACE.

100% CONSTRUCTION DOCUMENTS

Revisions | Date

CONSULTANTS

GRAEF

5126 W. Terrace Drive
Suite 111
Madison, WI 53718-8343
608 / 242 1550
608 / 242 0787 fax

www.graef-usa.com

ARCHITECT/ ENGINEERS:

13100 watertown plank road
suite 200
elm grove, wi 53122

p 262.641.0746
f 262.641.0584

nagel architects

IBC ENGINEERING SERVICES, INC.

N8 W22195 JOHNSON DR
STE 180
WAUKESHA, WI 53186
262.549.1190
262.549.1620 fx

Drawing Title: FOUNDATION AND FRAMING PLANS

Project Title: Middleton VAH Construct Pharmacy Cache

Project Number: 607-13-101

Building Number: 19

Approved: Project Director

Location: Madison, WI

Date: May 13, 2013

Checked: BS

Drawn: KN

Drawing Number: S100

Dwg. of

Department of Veterans Affairs

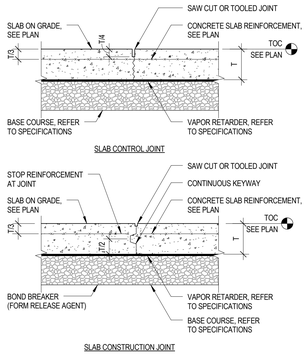

1 DETAIL
1/2" = 1'-0"

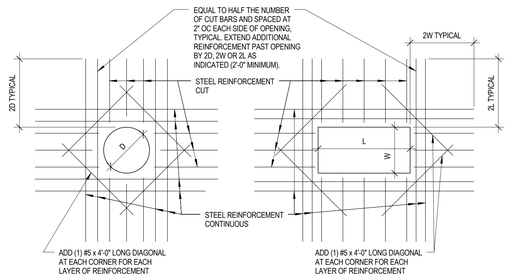

NOTES:

1. TYPICAL FOR ALL OPENINGS IN CONCRETE WALLS AND SLABS UNLESS NOTED OTHERWISE ON PLAN.
2. DO NOT WELD REINFORCEMENT TO PIPE SLEEVES AND INSERTS.
3. FOR OPENINGS 1'-0" ROUND/SQUARE OR LESS THE WALL STEEL CAN BE REPLACED WITHOUT ADDITIONAL REINFORCEMENT.

2 DETAIL
1/2" = 1'-0"

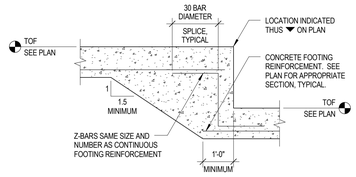

3 DETAIL
1/2" = 1'-0"

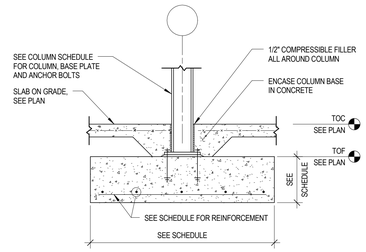

4 SECTION
1/2" = 1'-0"

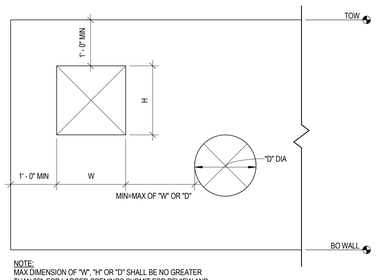

NOTE:
MAX DIMENSION OF "W", "H" OR "D" SHALL BE NO GREATER THAN 36". FOR LARGER OPENINGS SUBMIT FOR REVIEW AND APPROVAL BY THE ENGINEER.

5 TYP. WALL OPENING
3/4" = 1'-0"

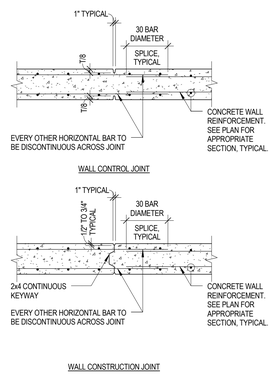

6 DETAIL
1/2" = 1'-0"

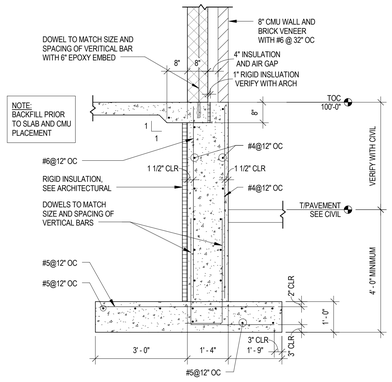

7 SECTION
1/2" = 1'-0"

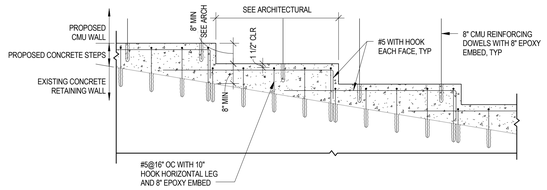

8 SECTION
1/2" = 1'-0"

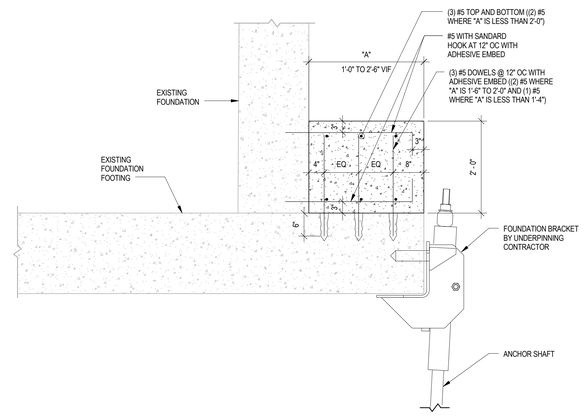

9 UNDERPINNING BRACKET DETAIL
3/4" = 1'-0"

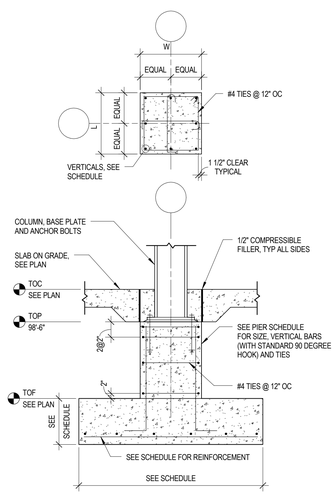

10 TYPICAL CONCRETE PIER
1/2" = 1'-0"

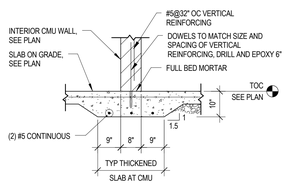

11 SECTION
1/2" = 1'-0"

100% CONSTRUCTION DOCUMENTS

Revisions	Date

CONSULTANTS

GRÄEF

5126 W. Terrace Drive
Suite 111
Madison, WI 53718-8343
608 / 242 1550
608 / 242 0787 fax

www.graef-usa.com

ARCHITECT/ ENGINEERS:

13100 watertown plank road
suite 200
elm grove, wi 53122

p 262.641.0746
f 262.641.0584

nagel architects

IBC ENGINEERING SERVICES, INC.

N8 W22195 JOHNSON DR
STE 180
WAUKESHA, WI 53186
262.549.1190
262.549.1620 fx

Drawing Title: FOUNDATION DETAILS

Approved: Project Director

Project Title: Middleton VAH Construct Pharmacy Cache

Location: Madison, WI

Date: May 13, 2013 | Checked: BS | Drawn: KN

Project Number: 607-13-101

Building Number: 19

Drawing Number: S500

Dwg. of

Department of Veterans Affairs

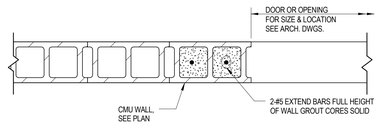

1 TYP. MASONRY OPENING AT CMU LINTEL
1" = 1'-0"

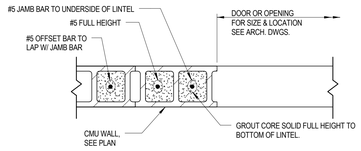

2 TYP. MASONRY OPENING AT PRECAST/ STEEL LINTEL
1" = 1'-0"

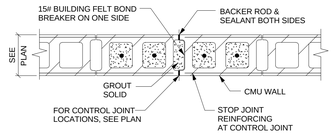

NOTE: STOP BOND BEAM REINFORCING AT CONTROL JOINTS.

TYPICAL CONTROL JOINT

3 TYPICAL CMU CONTROL JOINT
1" = 1'-0"

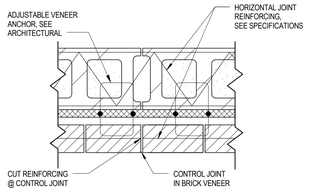

4 TYP. HORIZ. JOINT REINF. @ CONTROL JOINT
1 1/2" = 1'-0"

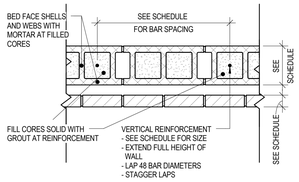

5 SECTION
1" = 1'-0"

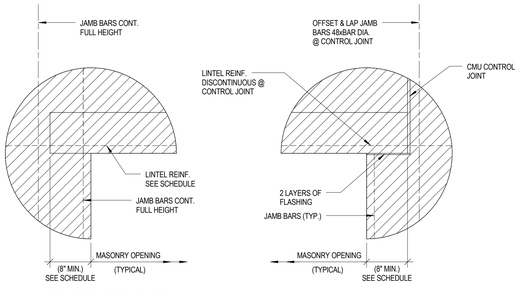

NOT AT CONTROL JOINT

AT CONTROL JOINT

6 TYP. CMU LINTEL BEARING DETAILS
1" = 1'-0"

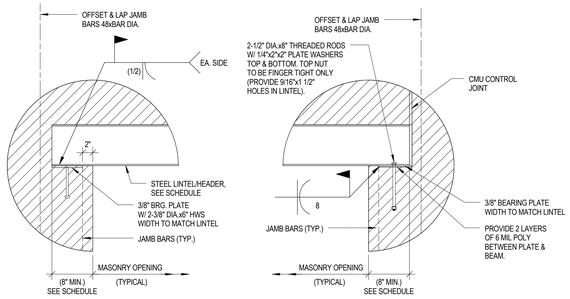

NOT AT CONTROL JOINT

AT CONTROL JOINT

7 TYP. STEEL LINTEL/HEADER BEARING DETAILS
1" = 1'-0"

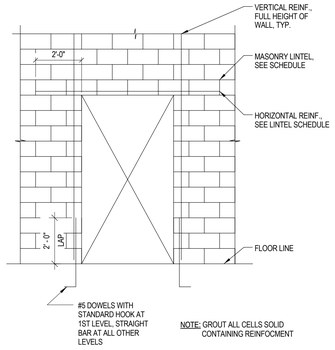

NOTE: GROUT ALL CELLS SOLID CONTAINING REINFOCMENT

8 DETAIL
3/8" = 1'-0"

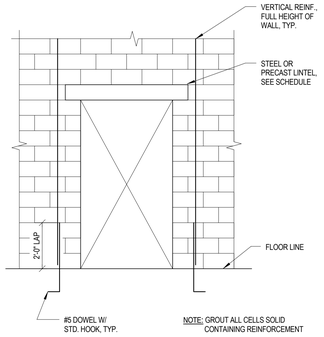

NOTE: GROUT ALL CELLS SOLID CONTAINING REINFORCEMENT

9 DETAIL
3/8" = 1'-0"

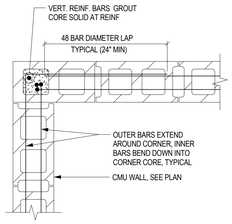

10 TYPICAL BOND BEAM CORNER
1" = 1'-0"

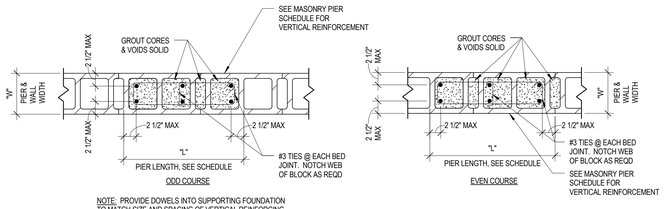

NOTE: PROVIDE DOWELS INTO SUPPORTING FOUNDATION TO MATCH SIZE AND SPACING OF VERTICAL REINFORCING.

11 W"xL" CMU PIER
1" = 1'-0"

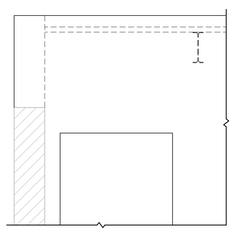

12 SECTION AT EXISTING/NEW WALL CORNER
1/2" = 1'-0"

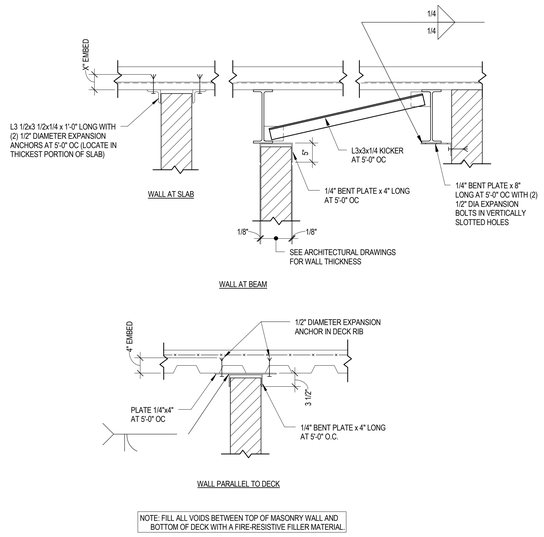

NOTE: FILL ALL VOIDS BETWEEN TOP OF MASONRY WALL AND BOTTOM OF DECK WITH A FIRE-RESISTIVE FILLER MATERIAL

13 TYP NON-LOAD BEARING CMU WALL TOP CONNECTION
3/4" = 1'-0"

100% CONSTRUCTION DOCUMENTS

Revisions	Date

CONSULTANTS

GRÄEF
5126 W. Terrace Drive
Suite 111
Madison, WI 53718-8343
608 / 242 1550
608 / 242 0787 fax
www.graef-usa.com

ARCHITECT/ ENGINEERS:

13100 watertown plank road
suite 200
elm grove, wi 53122
p 262.641.0746
f 262.641.0584

nagel architects

IBC ENGINEERING SERVICES, INC.
N8 W22195 JOHNSON DR
STE 180
WAUKESHA, WI 53186
262.549.1190
262.549.1620 fx

Drawing Title: MASONRY DETAILS

Project Title: Middleton VAH Construct Pharmacy Cache

Project Number: 607-13-101

Building Number: 19

Approved: Project Director

Location: Madison, WI

Date: May 13, 2013 | Checked: BS | Drawn: KN

Drawing Number: S505

Dwg. of

Department of Veterans Affairs

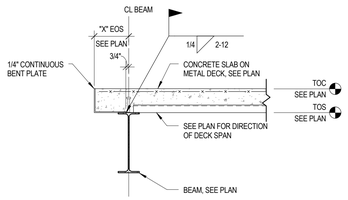

NOTES:
1. DETAIL DOES NOT APPLY WHERE PRECAST CONCRETE, CMU, OR OTHER GRAVITY LOAD IS SUPPORTED AT SLAB EDGE. REFER TO PLANS FOR ADDITIONAL SECTIONS.

1 DETAIL
3/4" = 1'-0"

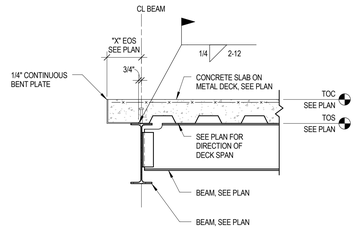

NOTES:
1. DETAIL DOES NOT APPLY WHERE PRECAST CONCRETE, CMU, OR OTHER GRAVITY LOAD IS SUPPORTED AT SLAB EDGE. REFER TO PLANS FOR ADDITIONAL SECTIONS.

2 DETAIL
3/4" = 1'-0"

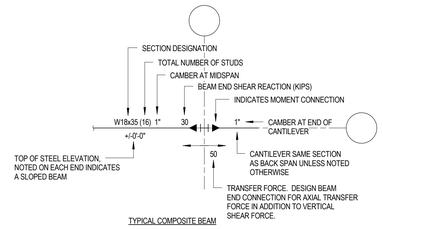

TYPICAL COMPOSITE BEAM

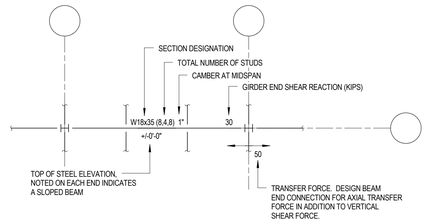

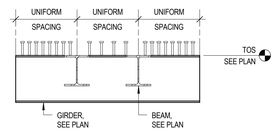

TYPICAL COMPOSITE GIRDER

NOTES:

1. PROVIDE CONNECTION DESIGN BASED ON END REACTIONS AND TYPE OF CONNECTION INDICATED ON THE DRAWINGS. END REACTIONS SHOWN ON THE DRAWINGS ARE WORKING LOADS. IF THE FABRICATOR DESIGNS CONNECTIONS USING LRFD A 1.5 LOAD FACTOR SHALL BE USED.

2. MINIMUM NUMBER OF BOLTS ARE AS FOLLOWS UNLESS MORE ARE REQUIRED PER NOTE 1:
   1. W8, W10, OR W12: 2 3. W18 OR W21: 4 5. W30 OR W33: 6
   2. W14 OR W16: 3 4. W24 OR W27: 5 6. W36: 7

3 DETAIL
3/4" = 1'-0"

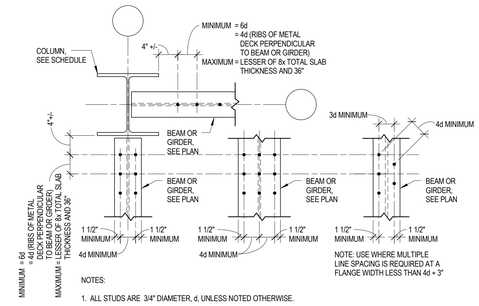

NOTES:

1. ALL STUDS ARE 3/4" DIAMETER, d, UNLESS NOTED OTHERWISE.

2. STUD LENGTHS ARE AS FOLLOWS:
   - 4 1/2" CONCRETE OVER 1 1/2" METAL DECK. STUD LENGTH = 4 1/2"

3. TOTAL NUMBER OF STUDES IS INDICATED ON FRAMING PLAN.

4. STUDS IN ONE ROW SHALL BE PLACED DIRECTLY OVER THE BEAM WEB.

5. PLACE STUDS IN A SINGLE ROW WHERE SPACING REQUIREMENTS PERMIT. STUDS SHALL BE PLACED IN TWO ROWS OR THREE ROWS ONLY WHERE REQUIRED IN ORDER TO PLACE THE TOTAL NUMBER OF STUDS.

6. NUMBER OF STUDS PERMITTED PER INDIVIDUAL METAL DECK RIB IS 3 MAXIMUM.

4 DETAIL
3/4" = 1'-0"

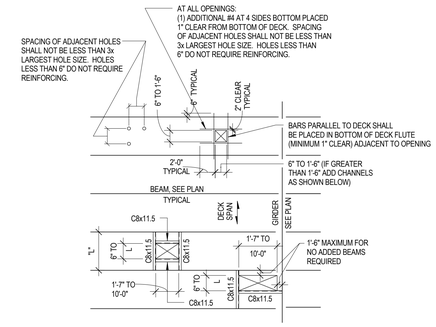

NOTES:

1. BLOCK OUT OPENING BEFORE PLACING CONCRETE. REMOVE BLOCKOUT AND CUT DECK AT UNFRAMED OPENINGS AFTER CONCRETE HAS CURED.

2. CONTRACTOR SHALL COORDINATE SIZE AND LOCATION WITH MECHANICAL AND ELECTRICAL CONTRACTORS AND ARCHITECTURAL DRAWINGS.

5 DETAIL
1/8" = 1'-0"

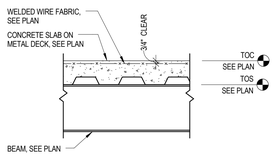

6 SECTION
3/4" = 1'-0"

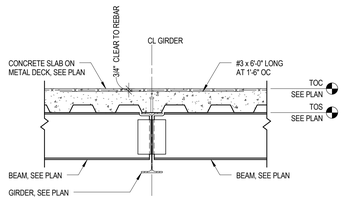

8 DETAIL
3/4" = 1'-0"

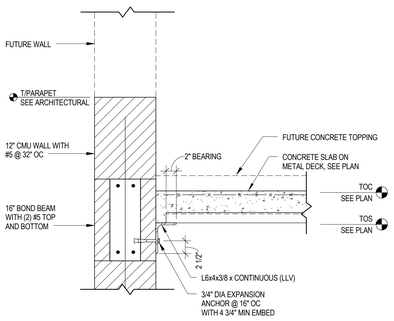

11 TYP EDGE OF DECK AT CMU
1" = 1'-0"

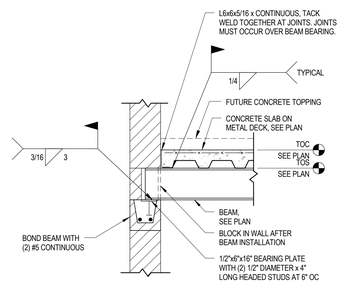

12 TYP BEAM BEARING
3/4" = 1'-0"

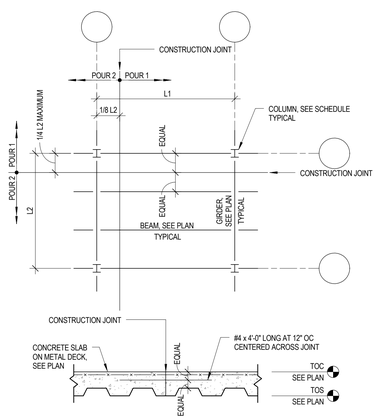

7 DETAIL
3/4" = 1'-0"

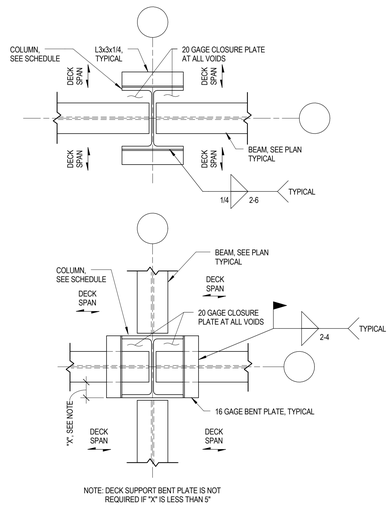

NOTE: DECK SUPPORT BENT PLATE IS NOT REQUIRED IF "X" IS LESS THAN 5"

9 DETAIL
3/4" = 1'-0"

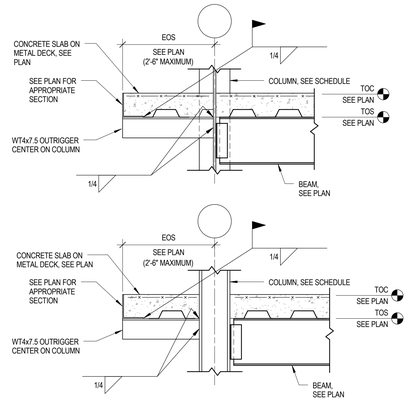

NOTES:

1. DETAIL DOES NOT APPLY WHERE PRECAST CONCRETE, CMU, OR OTHER GRAVITY LOAD IS SUPPORTED AT SLAB EDGE.

2. WHERE EDGE OF SLAB IS SHOWN TO BE CURVED, SDI POUR STOPS AND BENT PLATE SHALL BE ROLLED TO MATCH INDICATED CURVE.

10 DETAIL
3/4" = 1'-0"

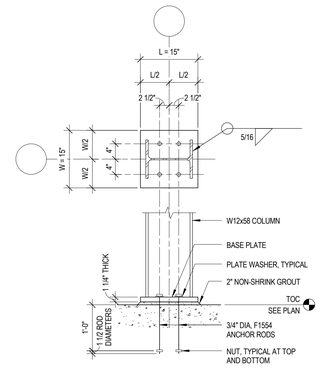

13 SECTION
3/4" = 1'-0"

100% CONSTRUCTION DOCUMENTS

Revisions	Date

CONSULTANTS

GRÄEF
5126 W. Terrace Drive
Suite 111
Madison, WI 53718-8343
608 / 242 1550
608 / 242 0787 fax
www.graef-usa.com

ARCHITECT/ ENGINEERS:

13100 watertown plank road
suite 200
elm grove, wi 53122
p 262.641.0746
f 262.641.0584

nagel architects

IBC ENGINEERING SERVICES, INC.
N8 W22195 JOHNSON DR
STE 180
WAUKESHA, WI 53186
262.549.1190
262.549.1620 fx

Drawing Title: STEEL DETAILS

Approved: Project Director

Project Title: Middleton VAH Construct Pharmacy Cache

Location: Madison, WI

Date: May 13, 2013 | Checked: BS | Drawn: KN

Project Number: 607-13-101

Building Number: 19

Drawing Number: S510

Dwg. of

Department of Veterans Affairs

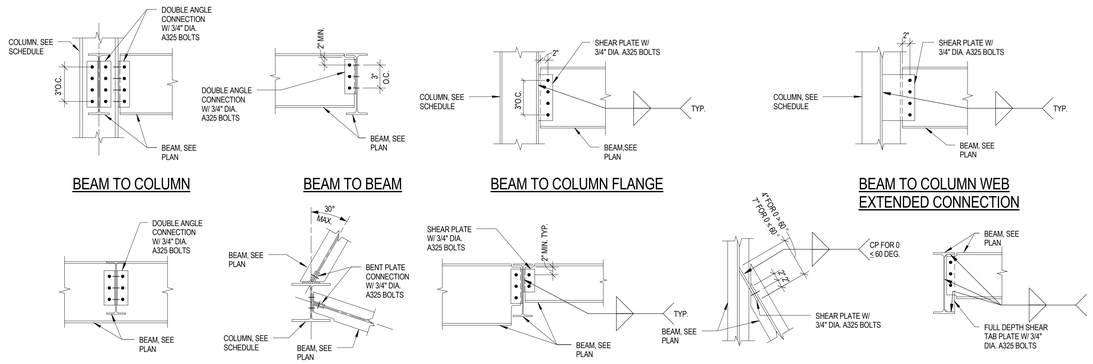

NOTES:

A. CONTRACTOR MAY SUBSTITUTE WELDS IN LIEU OF BOLTS.
B. CONTRACTOR MAY SUBSTITUTE SINGLE ANGLE IN LIEU OF DOUBLE ANGLE CONNECTIONS. DESIGN SHALL BE BASED ON LATEST AISC MANUAL OF STEEL CONSTRUCTION.

1 TYPICAL SHEAR CONNECTIONS

3/4" = 1'-0"

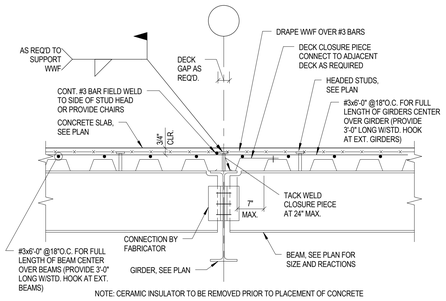

NOTE: CERAMIC INSULATOR TO BE REMOVED PRIOR TO PLACEMENT OF CONCRETE

2 TYPICAL BEAM TO GIRDER CONNECTION

3/4" = 1'-0"

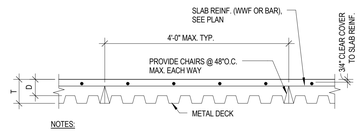

NOTES:

- SEE PLANS & GENERAL NOTES FOR COMPOSITE METAL DECK TYPE, GAGE, DEPTH, CONC. COVER THICKNESS "D" TOTAL SLAB THICKNESS "T" AND SLAB REINF. SIZE.

3 TYPICAL SLAB REINFORCMENT

3/4" = 1'-0"

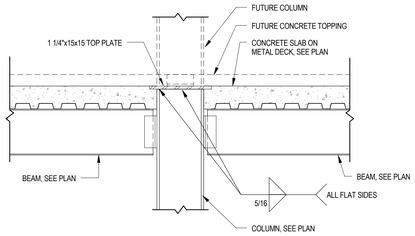

4 SECTION

3/4" = 1'-0"

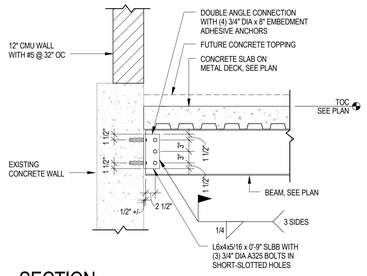

5 SECTION

3/4" = 1'-0"

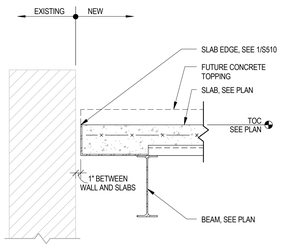

6 SECTION

1" = 1'-0"

100% CONSTRUCTION DOCUMENTS

Revisions	Date

CONSULTANTS

GRÄEF
5126 W. Terrace Drive
Suite 111
Madison, WI 53718-8343
608 / 242 1550
608 / 242 0787 fax
www.graef-usa.com

ARCHITECT/ ENGINEERS:

13100 watertown plank road
suite 200
elm grove, wi 53122
p 262.641.0746
f 262.641.0584

nagel architects

IBC ENGINEERING SERVICES, INC.
N8 W22195 JOHNSON DR
STE 180
WAUKESHA, WI 53186
262.549.1190
262.549.1620 fx

Drawing Title: STEEL DETAILS

Approved: Project Director

Project Title: Middleton VAH Construct Pharmacy Cache

Location: Madison, WI

Date: May 13, 2013 | Checked: BS | Drawn: KN

Project Number: 607-13-101

Building Number: 19

Drawing Number: S511

Dwg. of

Department of Veterans Affairs