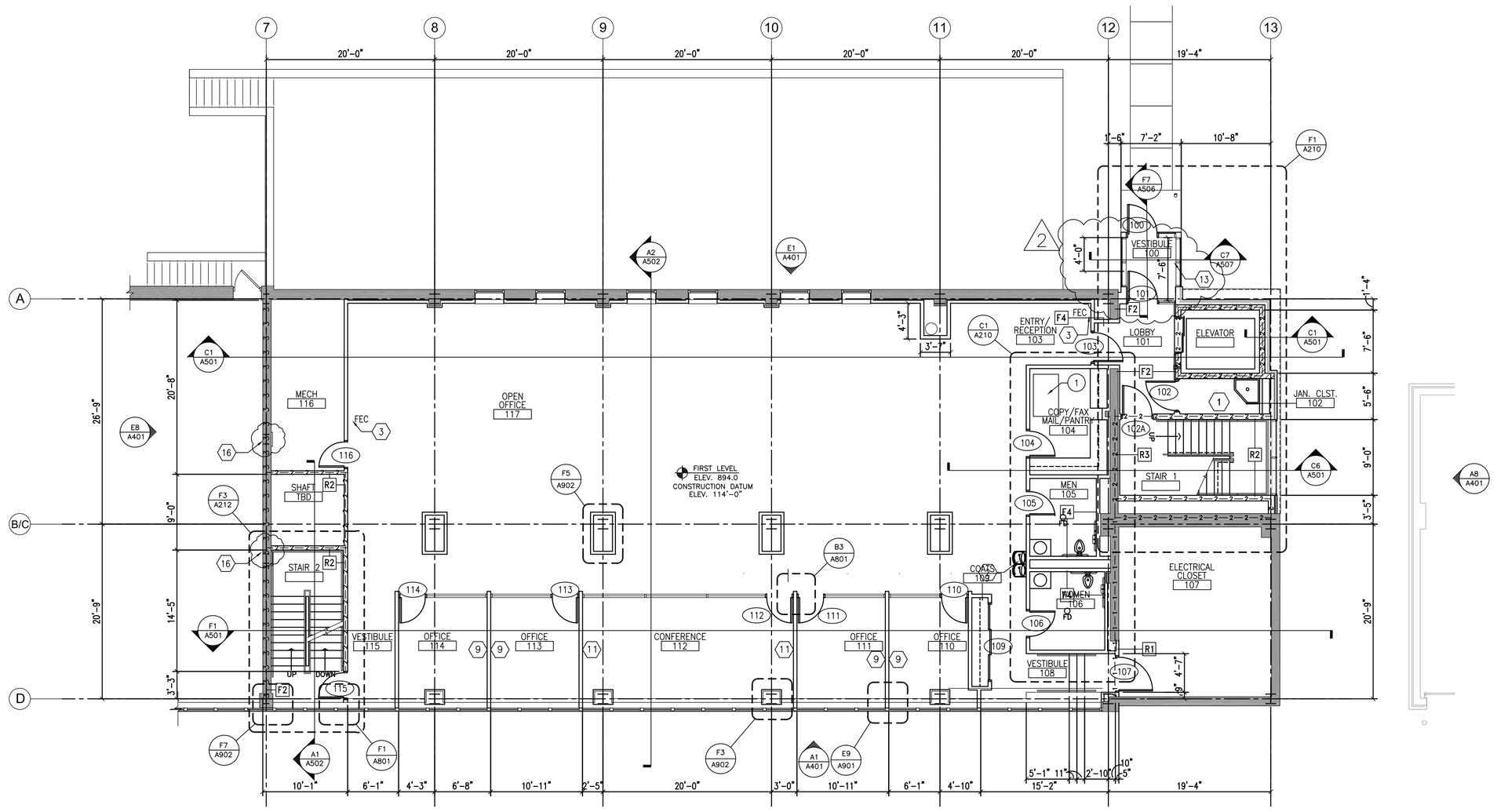

C1 FIRST LEVEL FLOOR PLAN - 114'-0" (894.00)

1/8" = 1'-0"

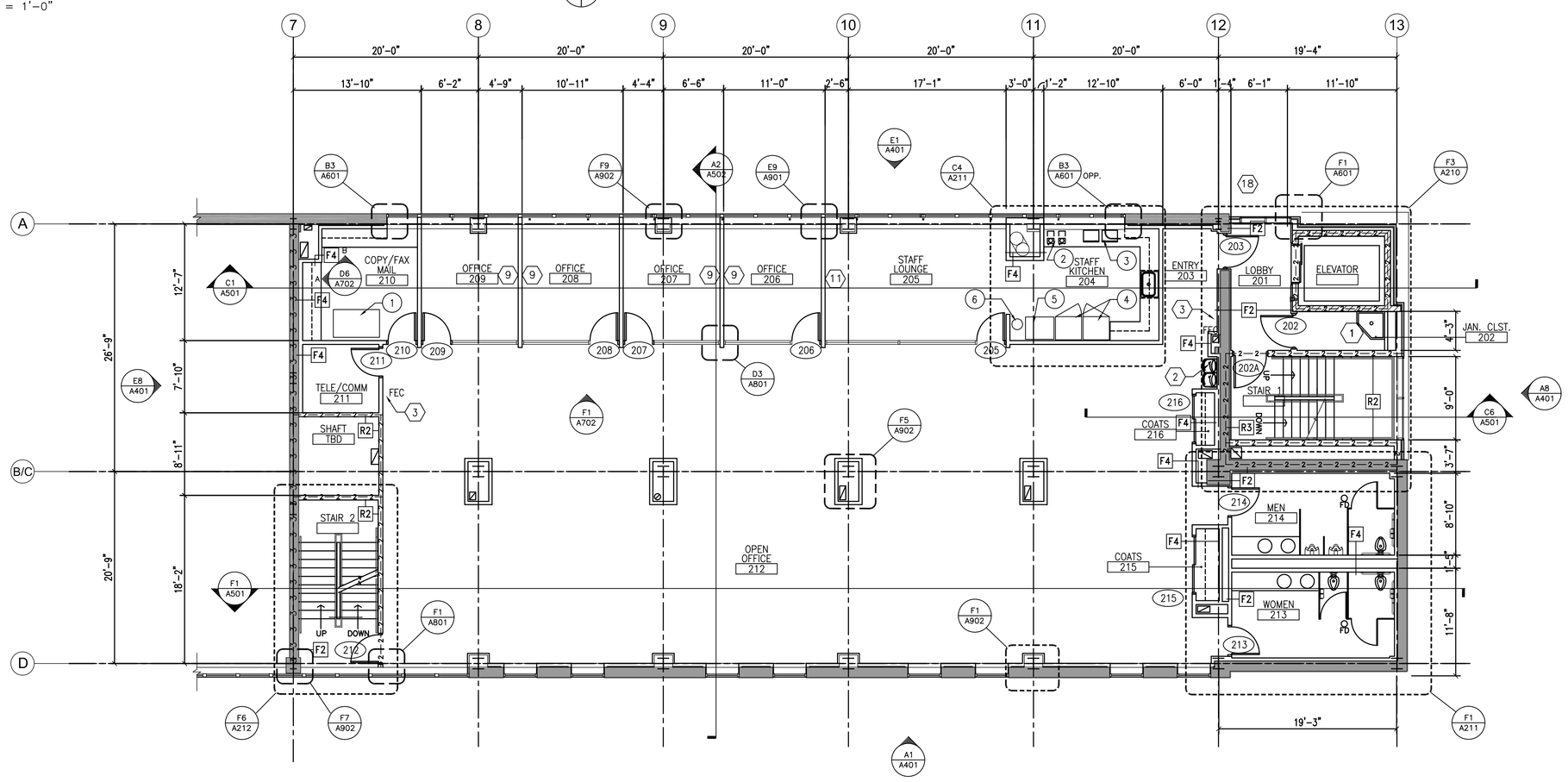

F1 SECOND LEVEL FLOOR PLAN - 125'-0"

1/8" = 1'-0"

WALL TYPES:(SEE A901 FOR MORE INFO)

GENERAL NOTES:

1. EXISTING BUILDING PLANS HAVE BEEN SHOWN ACCORDING TO ORIGINAL BUILDING PLANS AND FIELD NOTES AND MEASUREMENTS. EXISTING CONDITIONS AND DIMENSIONS SHALL BE FIELD VERIFIED BY CONTRACTORS AND DISCREPANCIES REPORTED TO THE ARCHITECT PRIOR TO FRAMING.

2. EXISTING WALLS, PARTITIONS, FLOOR LINES AND DOORS AND FRAMES THAT REMAIN ARE SHOWN IN CONTINUOUS LINE WEIGHT. THESE AND EXISTING FLOOR AND WALL FINISHES THAT ARE SCHEDULED TO REMAIN SHALL BE PROTECTED FROM DAMAGE DURING DEMOLITION AND CONSTRUCTION. ANY SUCH EXISTING CONDITIONS WHICH ARE DAMAGED OR BECOME UNSTABLE DUE TO OTHER DEMOLITION SHALL BE REPLACED AT NO COST TO OWNER WITH NEW CONSTRUCTION TO MATCH.

3. GC SHALL PROVIDE AND MAINTAIN APPROPRIATE BARRICADES AND SAFETY MEASURES IN AREAS OF CONSTRUCTION AT ALL TIMES.

4. ALL CUTTING AND PATCHING SHALL BE THE RESPONSIBILITY OF EACH SUBCONTRACTOR UNLESS OTHERWISE STIPULATED BY OR ARRANGED WITH THE GC.

5. ALL EXISTING WALLS, PATCH FLUSH TO REPAIR EXISTING HOLES, DAMAGED AREAS AND WHERE WALLS WERE PREVIOUSLY REMOVED, OR UTILITY MODIFICATIONS WERE PERFORMED. PROVIDE NEW FINISHES PER SCHEDULE.

6. ALL WALL TYPES TO BE TYPE P5 UNLESS NOTED OTHERWISE BY SYMBOL OR NOTE.

7. PROVIDE GYPSUM BOARD CONTROL JOINTS AT ALL LOCATIONS WHERE NEW WALL SURFACE MEETS EXISTING TO REMAIN.

8. ALL DIMENSIONS ARE TO FACE OF STUD AT NEW WALL CONSTRUCTION OR FACE OF EXISTING WALL SURFACE TO REMAIN UNLESS NOTED OTHERWISE.

9. ALL DIMENSIONS NOTED TO BE BE VERIFIED SHALL BE VERIFIED ON SITE BY THE CONTRACTOR AND REPORTED TO THE ARCHITECT FOR CONFIRMATION PRIOR TO FRAMING OF WALLS.

10. DIMENSIONS NOTED AS CLEAR OR CL'R ARE FINAL FINISHED WALL SURFACE TO FINAL FINISHED WALL SURFACE, SEE FINISH SCHEDULE AND VERIFY FINAL FINISH OF WALL PRIOR TO FRAMING.

EQUIPMENT SCHEDULE

SYMBOL	ITEM	FURN.	INSTALL
1	COPY MACHINE	VA	VA
2	COFFEE MAKER	VA	GC
3	MICROWAVE	VA	VA
4	REFRIGERATOR	VA	VA
5	VENDING MACHINE	VA	VA
6	WATER COOLER	VA	VA
7	LOCKERS	GC	GC

PLAN NOTES:

1. PROVIDE NEW FLOOR DRAIN AS REQUIRED PER MEP DRAWINGS. CONCRETE SLAB SHALL SLOPE TO DRAIN. REFER TO MEP DRAWINGS AND SPECIFICATIONS FOR FURTHER INFORMATION ON DRAIN AND REQUIRED BELOW SLAB PIPING.
2. PROVIDE NEW DRINKING FOUNTAIN AS REQUIRED PER MEP DRAWINGS. REFER TO MEP DRAWINGS AND SPECIFICATIONS FOR FURTHER INFORMATION ON EQUIPMENT AND REQUIRED BELOW SLAB PIPING.
3. NEW FIRE EXTINGUISHER/CABINET. V.A. STANDARD
4. NEW FLOOR MOUNTED FLUSH VALVE TOILET, SEE PLUMBING DRAWINGS, PROVIDE WITH NEW GRAB BARS AND TOILET ACCESSORIES AS SHOWN. INSTALL BLOCKING AS REQUIRED FOR MOUNTING OF ALL TOILET ACCESSORIES. SEE SHEET A-801 FOR MOUNTING HEIGHT INFO.
5. NEW BUILT IN CASEWORK, SEE INTERIOR ELEVATION AND DETAILS.
6. EQUIPMENT SHOWN FOR SCHEMATIC PURPOSES ONLY, EQUIPMENT IS OWNER SUPPLIED, OWNER INSTALLED.
7. NEW FLOOR FINISH TO BE PLACED TO THE TO CENTERLINE OF NEW DOORS (TYPICAL).
8. PAINT EXISTING AND NEW WALL CONSTRUCTION SURFACES TO NEAREST CORNER OR WALL TRANSITION SURFACE. MATCH EXISTING CONDITIONS.
9. PROVIDE WOOD BLOCKING IN WALL FOR WALL MOUNTED FURNITURE CABINETS. VERIFY LOCATION WITH FURNITURE DEALER
10. REFER TO ROOM FINISH SCHEDULE AND INTERIOR FINISH KEY, FOR ALL FINISHES IN NEW SPACES AND SPACES EFFECTED BY RENOVATION.
11. PROVIDE WOOD BLOCKING IN WALL FOR WALL HUNG TV. VERIFY LOCATION WITH OWNER
12. PAINT EXISTING AND NEW WALL CONSTRUCTION SURFACES TO NEAREST CORNER OR WALL TRANSITION SURFACE. MATCH EXISTING CONDITIONS.
13. LOCATE FLOOR MOUNTED POST IN FRONT OF MULLION FOR PUSH PLATE
14. DISH FLOOR AROUND FLOOR DRAIN
15. COORDINATE LEVEL OF BACKFILL PER STRUCTURAL W/ NEW ELEVATOR REQUIREMENTS
16. SEE SHEET S101 FOR STRUCTURAL REPAIR WORK IN THIS AREA.
17. NEW WALL TO RECEIVE PAINT PA-4 AND BASE RB-1 BOTH SIDES
18. PITCHED ROOF WITH SCUPPER

KEY PLAN: FIRST LEVEL

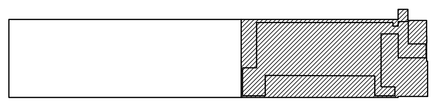

KEY PLAN: SECOND LEVEL

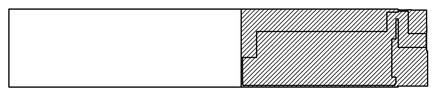

100% CONSTRUCTION DOCUMENTS

Revisions:	Date

CONSULTANTS:

ARCHITECT/ENGINEERS:

13100 watertown plank road
suite 200
elm grove, wi 53122
p 262.641.0746
f 262.641.0584
nagel architects
IBC ENGINEERING SERVICES INC.

Drawing Title: First & Second Level Floor Plan

Approved: Project Director

Project Title: William S. Middleton VA Hospital Renovate Building 2

Location: Madison, WI

Date: MARCH 29, 2013 | Checked: SAM | Drawn: REG

Project Number: 607-12-115

Building Number: 2

Drawing Number: A201

Dwg. of

Office of Construction and Facilities Management

Department of Veterans Affairs

VA FORM 08-6231

Accompanying VA69D13B1000-A00002

-1-

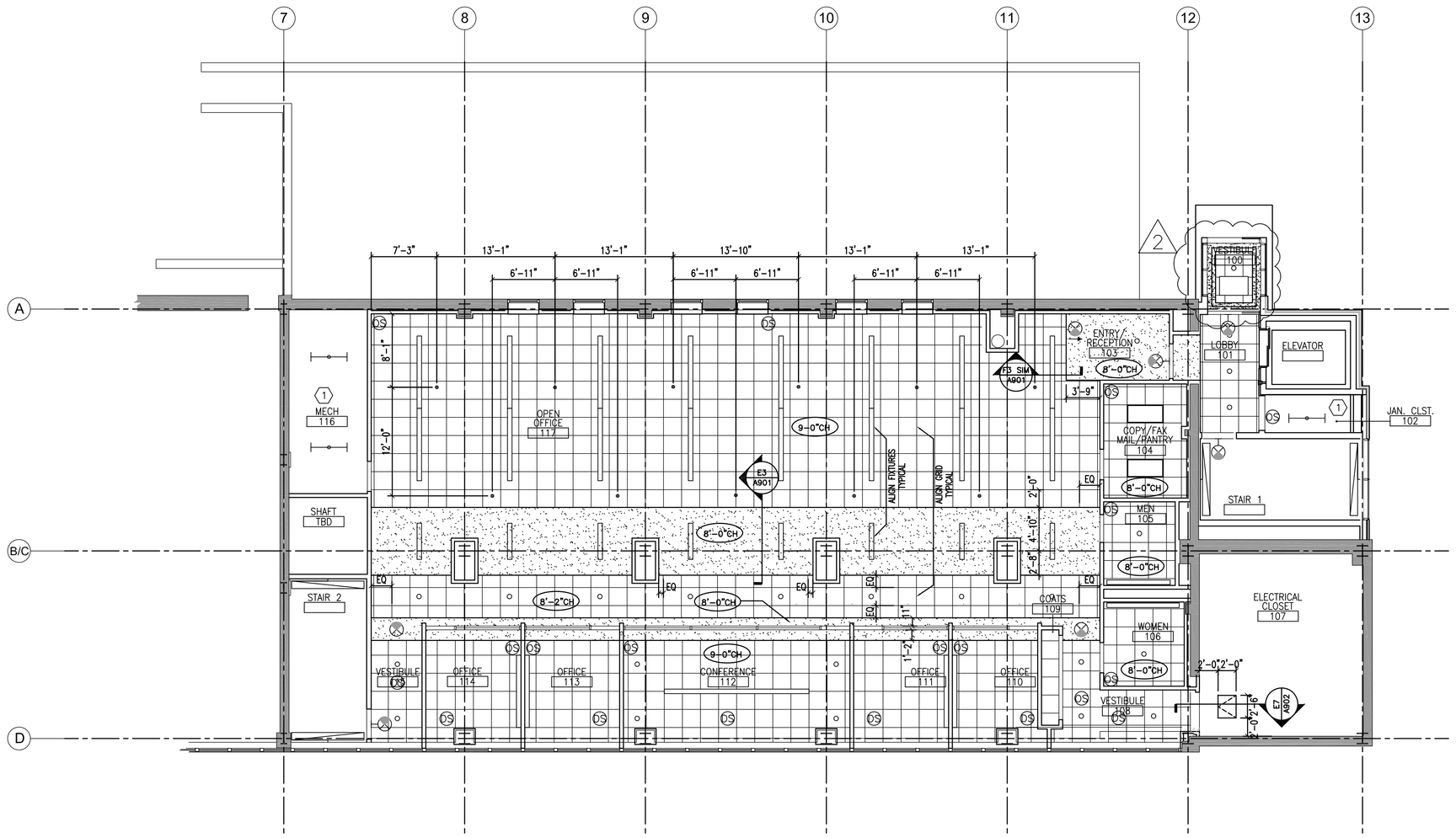

C1 FIRST LEVEL REFLECTED CEILING PLAN - 114'-0"

1/8" = 1'-0"

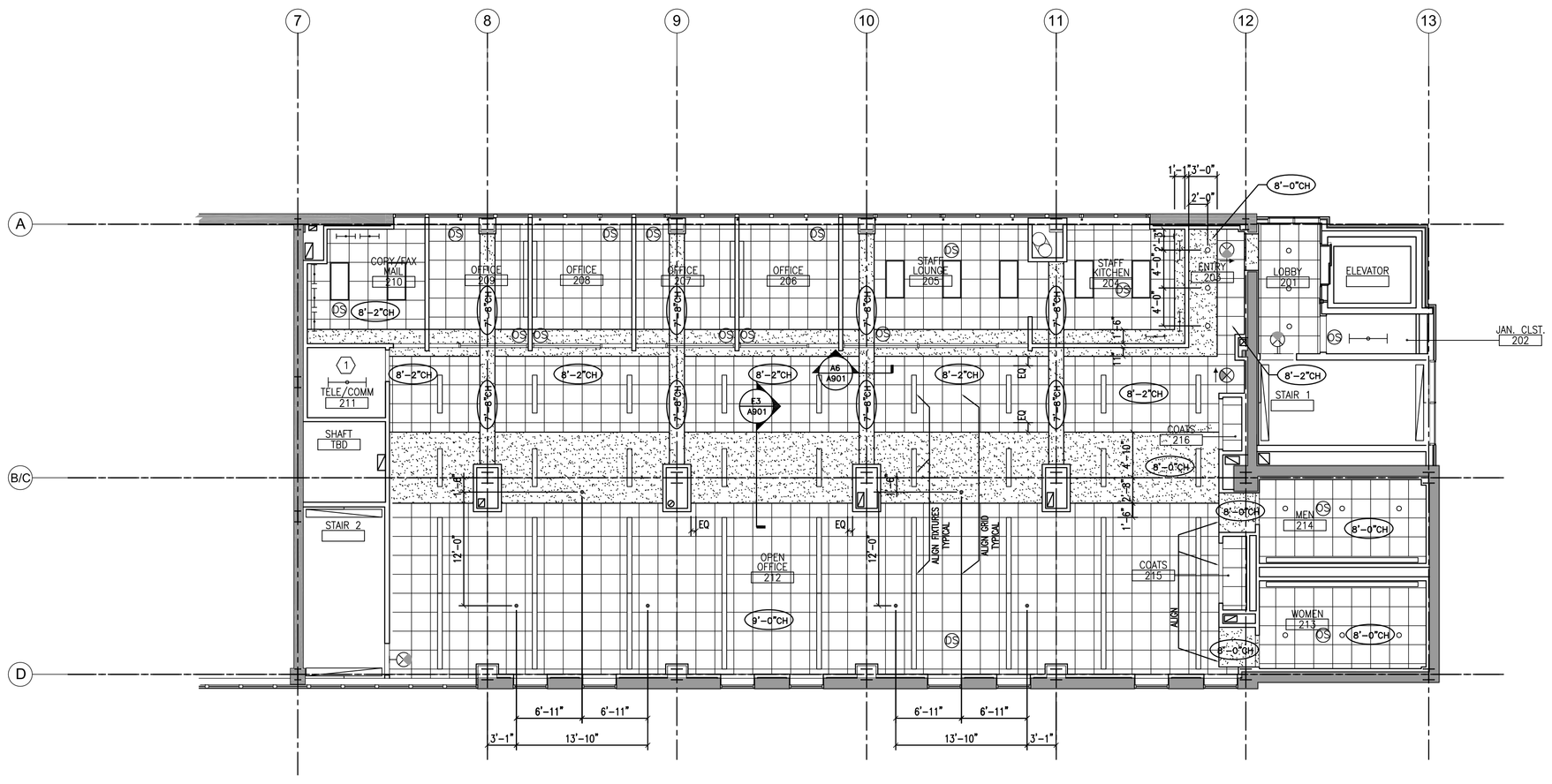

F1 SECOND LEVEL REFLECTED CEILING PLAN - 125'-0"

1/8" = 1'-0"

REFLECTED CEILING PLAN – GENERAL NOTES:

1. PERIMETER TILES SHALL NOT BE LESS THAN 4"
2. REMOVE EXISTING CEILING SYSTEM WHERE NEW WALLS PENETRATE EXISTING CEILING SYSTEMS TO REMAIN. PATCH TO MATCH EXISTING CEILING SYSTEM TO NEW WALL.
3. LOCATE ALL SPRINKLER HEADS, AUDIO SPEAKERS, SMOKE DETECTORS, HEAT SENSORS IN THE CENTER OF THE CEILING TILE (OR IN THE CENTER OF THE RAISED /RECESSED FIELD OF A PATTERNED TILE).
4. ALL CEILINGS TO BE AT 9'-0" UNLESS NOTED OTHERWISE.
5. REFER TO RELEVANT MEP DRAWINGS FOR MORE INFORMATION.

REFLECTED CEILING PLAN NOTES:

1. ROOM EXPOSED TO EXISTING STRUCTURE ABOVE
2. GYPSUM BOARD CEILING. COORDINATE LOCATION OF PENETRATIONS WITH ARCHITECT AND ENGINEER.
3. LOCATION IN CEILING FOR POWER/DATA SUPPLY TO WORKSTATIONS. COORDINATE WITH FURNITURE DEALER.
4. RECESSED CABINET UNIT HEATER. REFER TO MEP DRAWINGS AND ARCHITECTURAL SECTIONS/DETAILS.
5. GWB POCKET AND BULKHEAD. REFER TO ARCHITECTURAL SECTIONS/DETAILS.
6. SCHEDULED ACOUSTIC CEILING TILE. REFER TO ARCHITECTURAL SECTIONS/DETAILS FOR HEIGHT.

REFLECTED CEILING PLAN – SYMBOLS LEGEND:

- 2'-0" x 4'-0" SUSPENDED EXPOSED GRID ACOUSTIC CEILING TILE
- 2'-0" x 2'-0" SUSPENDED EXPOSED GRID ACOUSTIC CEILING TILE
- RETURN, TRANSFER, EXHAUST GRILLE
- SUPPLY GRILLE
- CASSETTE FAN COIL UNIT
- WALL-MOUNTED GRILLE
- SLOT DIFFUSER
- 2 x 2 FLUORESCENT LIGHT
- 2 x 4 FLUORESCENT LIGHT
- 1 x 4 FLUORESCENT LIGHT
- SURFACE MOUNTED FLUORESCENT LIGHT
- SURFACE MOUNTED LIGHT
- RECESSED DOWN LIGHT
- EXIT LIGHT
- WALL MOUNTED EXIT LIGHT
- GYPSUM BOARD CEILING FINISH OR BULKHEAD
- REFLECTED CEILING PLAN NOTE
- 8'-0" CEILING HEIGHT A.F.F.
- OCCUPANCY SENSOR
- DAYLIGHT SENSOR
- SPRINKLER HEAD
- 18" X 18" ACCESS PANEL

KEY PLAN: FIRST LEVEL

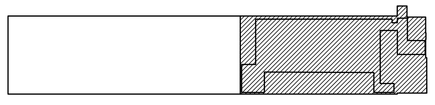

KEY PLAN: SECOND LEVEL

100% CONSTRUCTION DOCUMENTS

Revisions:	Date

CONSULTANTS:

ARCHITECT/ENGINEERS:

13100 watertown plank road
suite 200
elm grove, wi 53122
p 262.641.0746
f 262.641.0584

nagel architects

IBC ENGINEERING SERVICES INC.

Drawing Title: First & Second Level Reflected Ceiling Plan

Approved: Project Director

Project Title: William S. Middleton VA Hospital Renovate Building 2

Location: Madison, WI

Date: MARCH 29, 2013 | Checked: SAM | Drawn: REG

Project Number: 607-12-115

Building Number: 2

Drawing Number: A301

Dwg. of

Office of Construction and Facilities Management

Depar ment of Veterans Affairs

VA FORM 08-6231

Accompanying VA69D13B1000-A00002

-2-

SPRAY FIREPROOFING 1 HR UL #
ROOF FRAMING S805
FLOOR FRAMING D925
COLUMNS X772

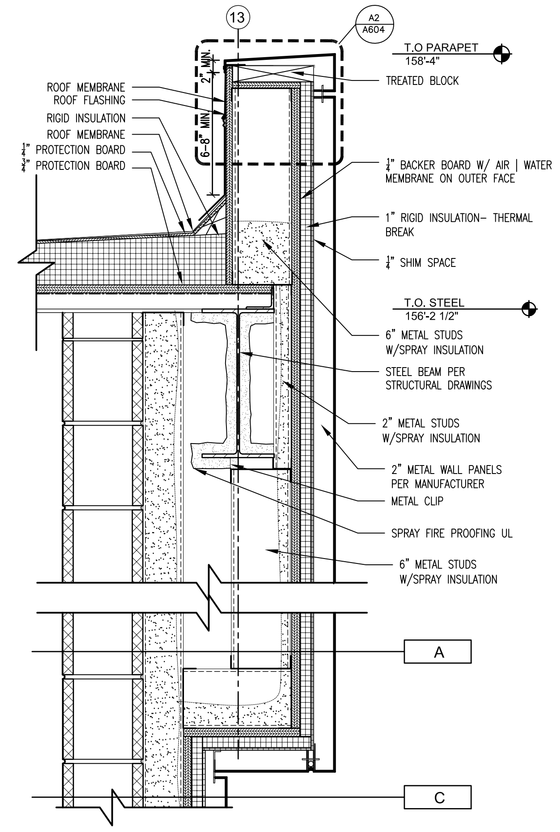

C1 A602 **DETAIL @ ELEVATOR PARAPET**
SCALE: 1 1/2" = 1'-0"

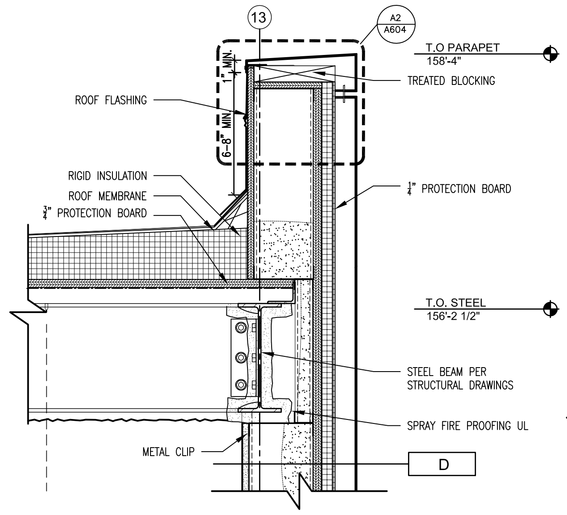

B3 A602 **DETAIL @ STAIR PARAPET**
SCALE: 1 1/2" = 1'-0"

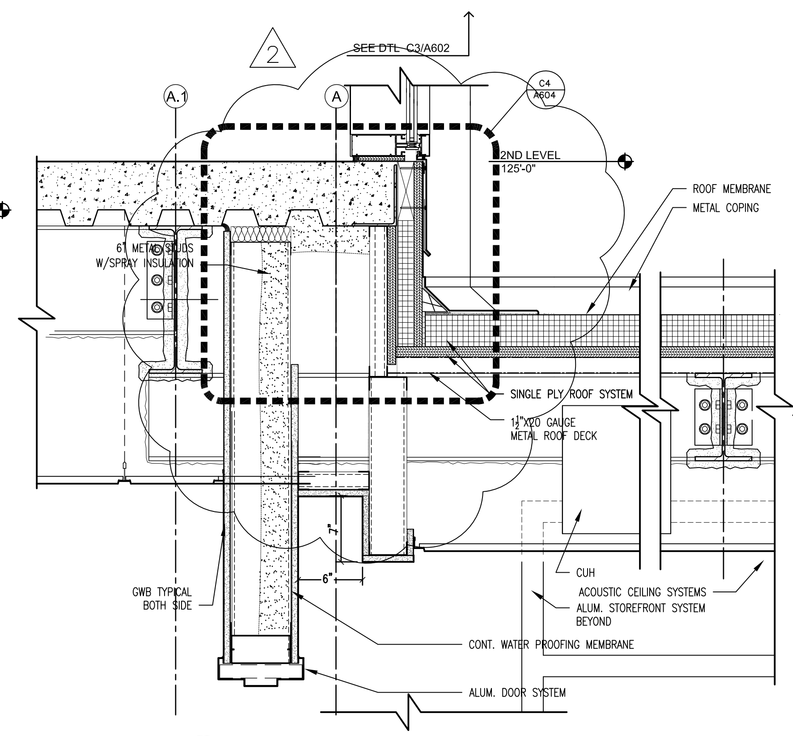

C5 A602 **DETAIL @ VESTIBULE**
SCALE: 1 1/2" = 1'-0"

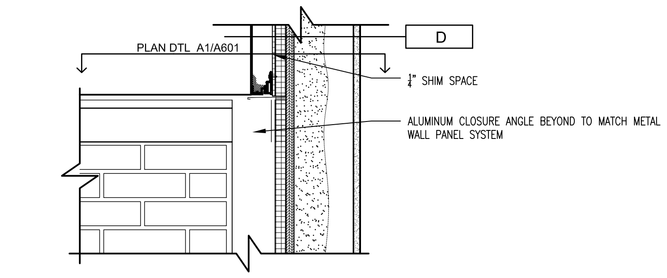

A7 A602 **DETAIL @ VESTIBULE-ABOVE SILL**
SCALE: 1 1/2" = 1'-0"

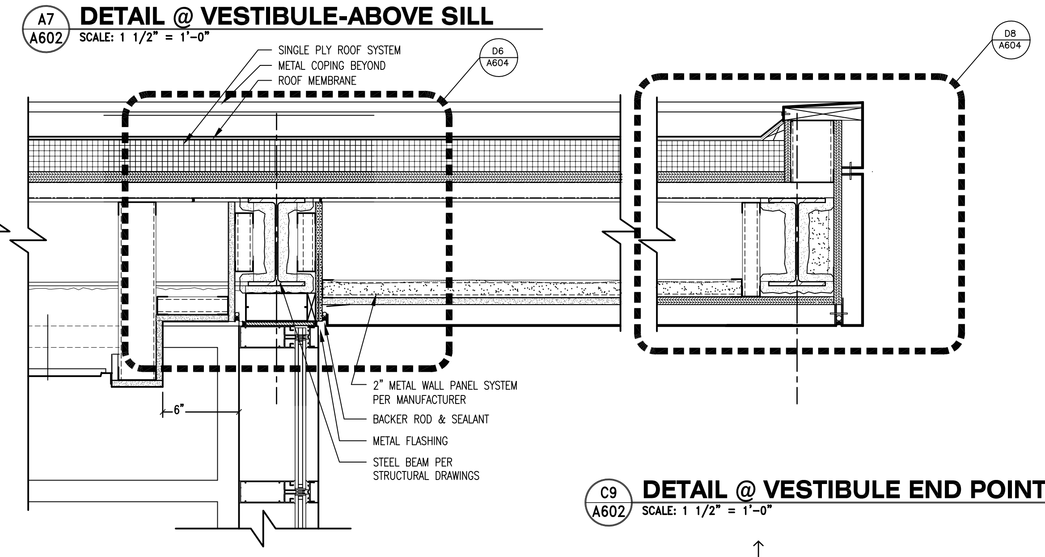

C9 A602 **DETAIL @ VESTIBULE END POINT**
SCALE: 1 1/2" = 1'-0"

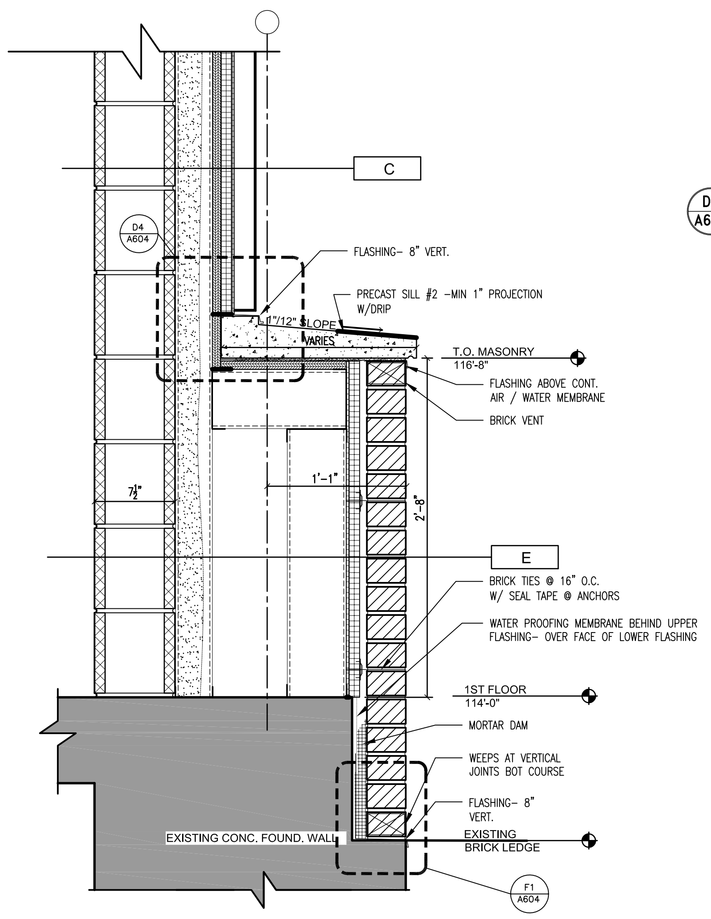

F1 A602 **DETAIL @ ELEVATOR BASE**
SCALE: 1 1/2" = 1'-0"

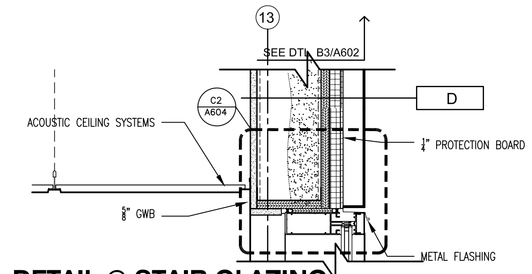

C3 A602 **DETAIL @ STAIR GLAZING**
SCALE: 1 1/2" = 1'-0"

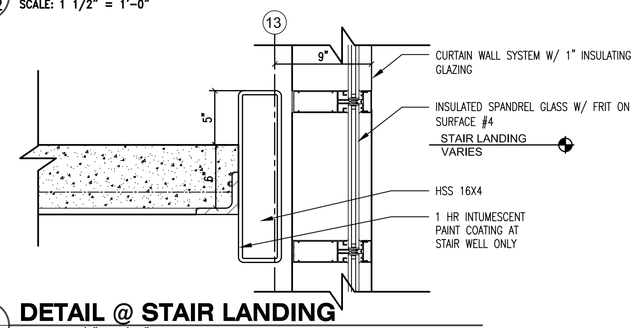

D3 A602 **DETAIL @ STAIR LANDING**
SCALE: 1 1/2" = 1'-0"

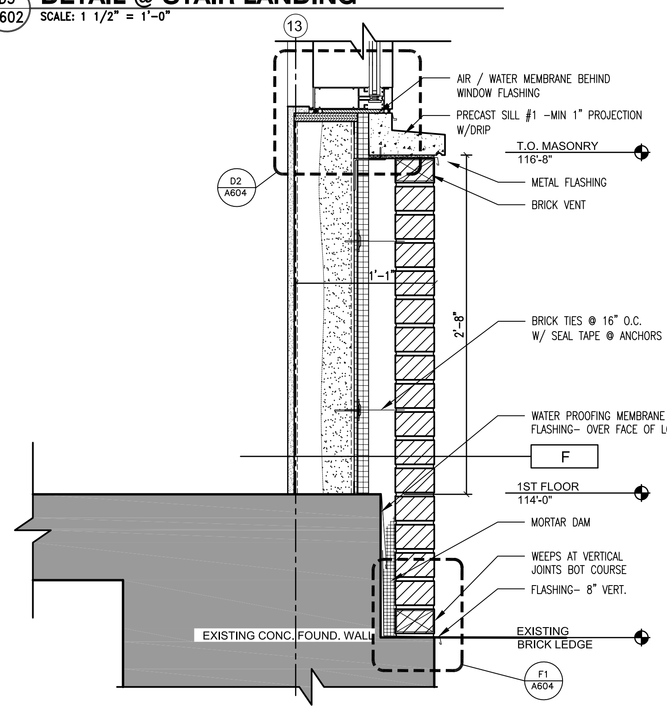

F3 A602 **DETAIL @ STAIR BASE**
SCALE: 1 1/2" = 1'-0"

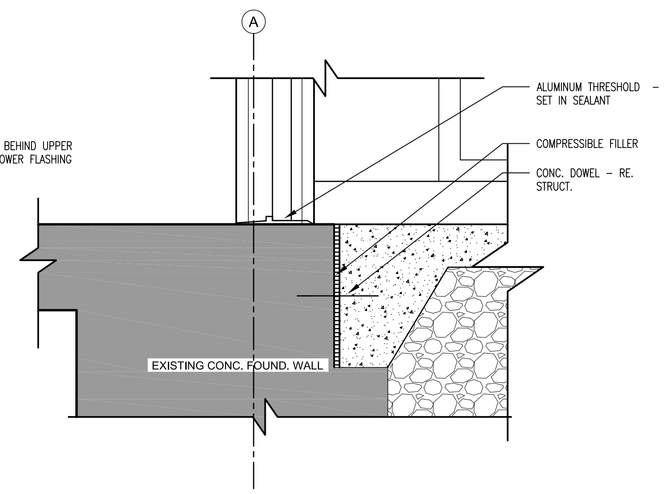

F5 A602 **DETAIL @ VESTIBULE & FOUNDATION**
SCALE: 1 1/2" = 1'-0"

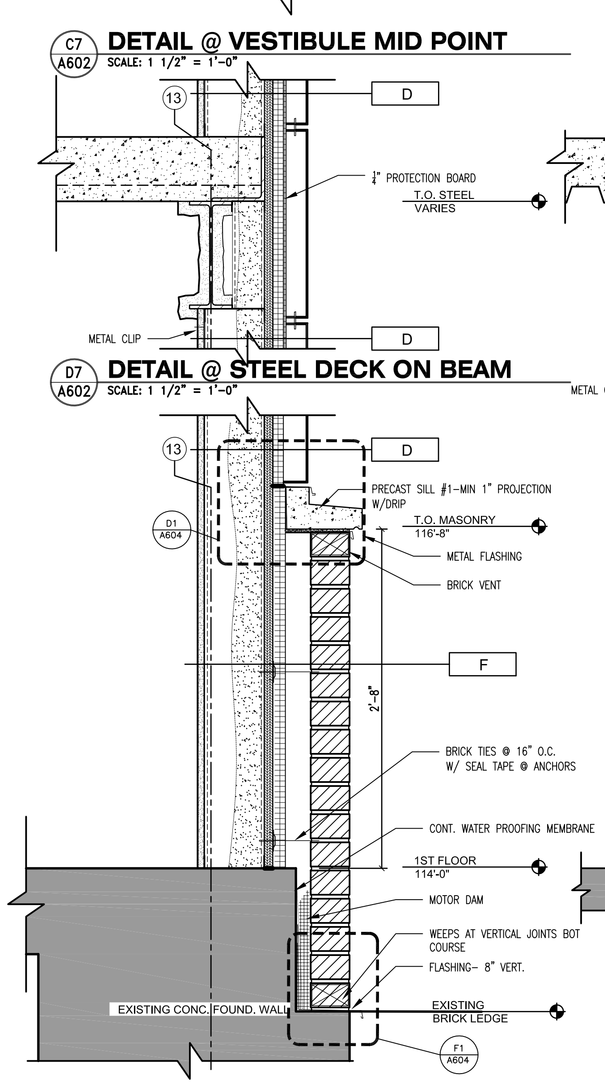

D7 A602 **DETAIL @ STEEL DECK ON BEAM**
SCALE: 1 1/2" = 1'-0"

F7 A602 **DETAIL @ TYPICAL BRICK BASE**
SCALE: 1 1/2" = 1'-0"

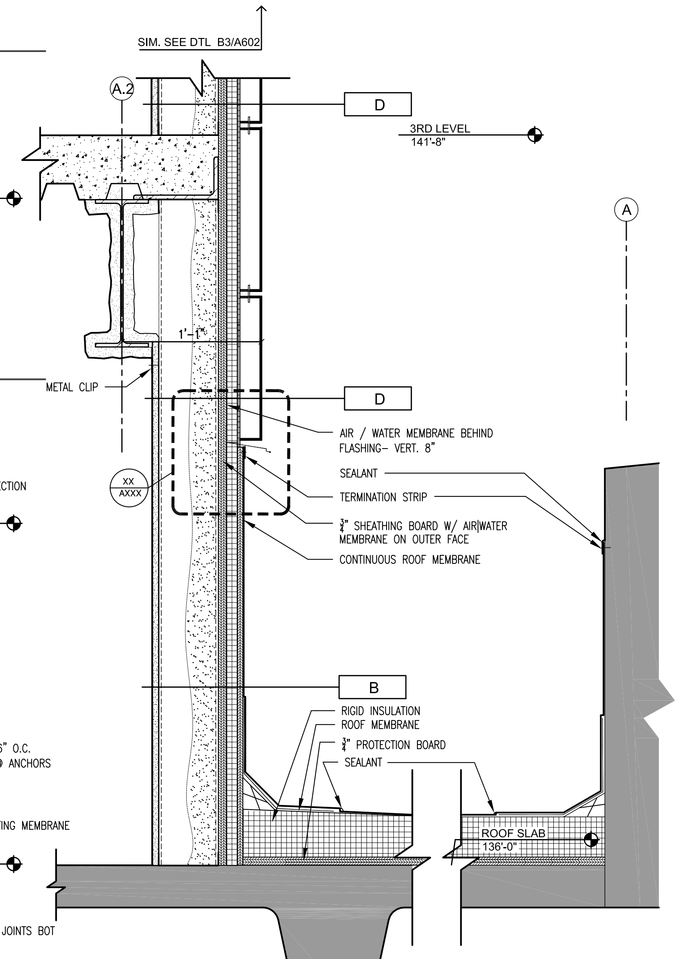

SEE SHEET A502 FOR EXTERIOR WALL TYPES

F9 A602 **DETAIL @ 3RD LEVEL PARAPET**
SCALE: 1 1/2" = 1'-0"

100% CONSTRUCTION DOCUMENTS

Revisions:	Date

CONSULTANTS:

ARCHITECT/ENGINEERS:

13100 watertown plank road
suite 200
elm grove, wi 53122
p 262.641.0746
f 262.641.0584
nagel architects
IBC ENGINEERING SERVICES INC.

Drawing Title: VERTICAL SECTIONS

Approved: Project Director

Project Title: William S. Middleton VA Hospital Renovate Building 2

Location: Madison, WI

Date: MARCH 29, 2013 | Checked: SAM | Drawn: SAS

Project Number: 607-12-115

Building Number: 2

Drawing Number: A602

Dwg. of

Office of Construction and Facilities Management

Department of Veterans Affairs

VA FORM 08-6231

Accompanying VA69D13B1000-A00002

-3-

SPRAY FIREPROOFING 1 HR UL #
ROOF FRAMING S805
FLOOR FRAMING D925
COLUMNS X772

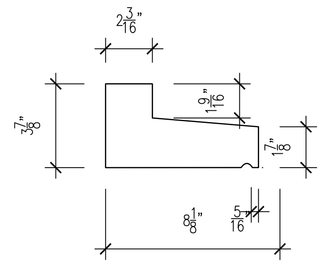

A1/A604 **PRECAST SILL - 1**
SCALE: 3" = 1'-0"

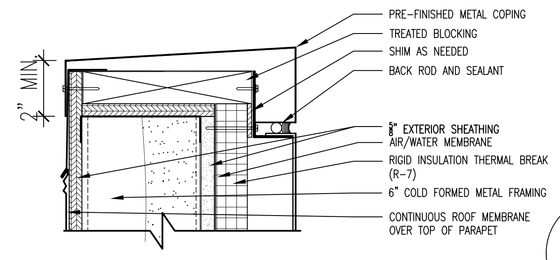

A2/A604 **DETAIL @ PARAPET**
SCALE: 3" = 1'-0"

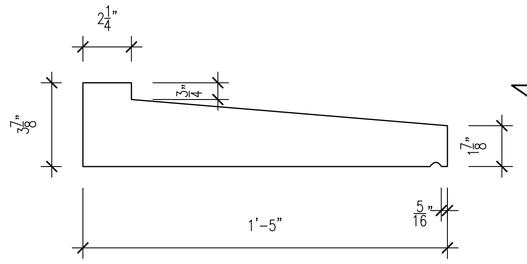

C1/A604 **PRECAST SILL - 2**
SCALE: 3" = 1'-0"

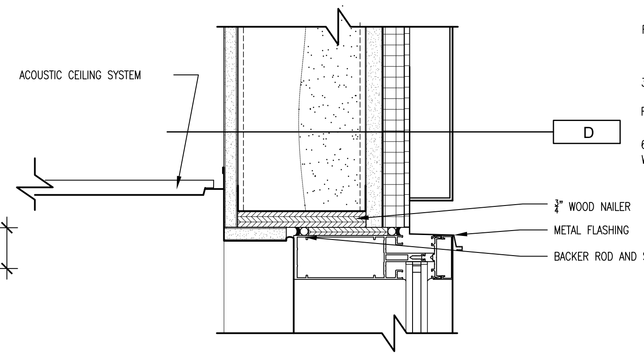

C2/A604 **DETAIL @ STUD & GLAZING**
SCALE: 3" = 1'-0"

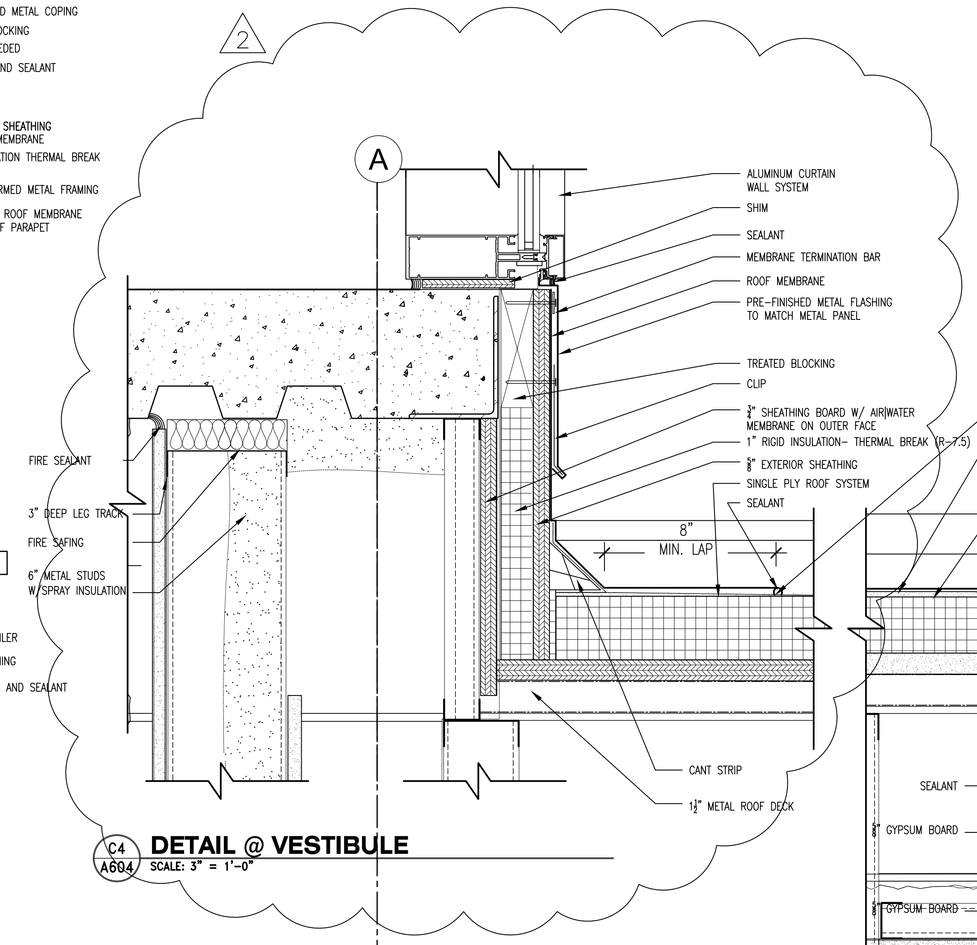

C4/A604 **DETAIL @ VESTIBULE**
SCALE: 3" = 1'-0"

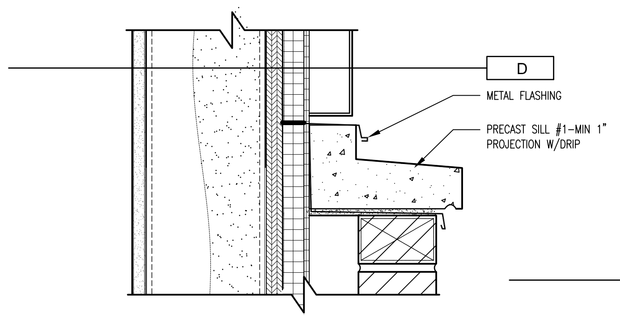

D1/A604 **DETAIL @ SILL - 1 & STUD WALL**
SCALE: 3" = 1'-0"

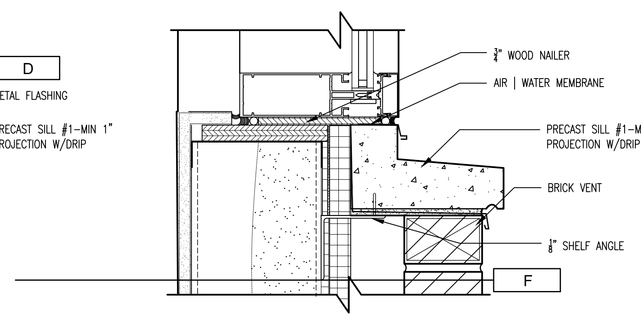

D2/A604 **DETAIL @ SILL 1 & CURTAIN WALL**
SCALE: 3" = 1'-0"

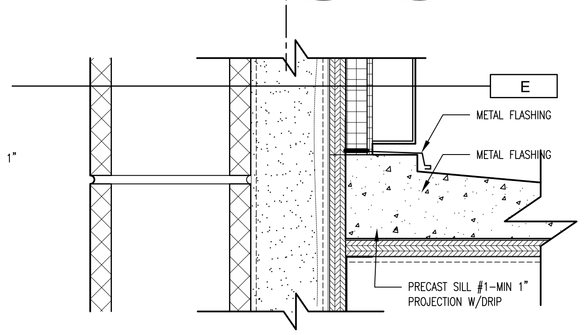

D4/A604 **DETAIL @ SILL - 1 & CMU WALL**
SCALE: 3" = 1'-0"

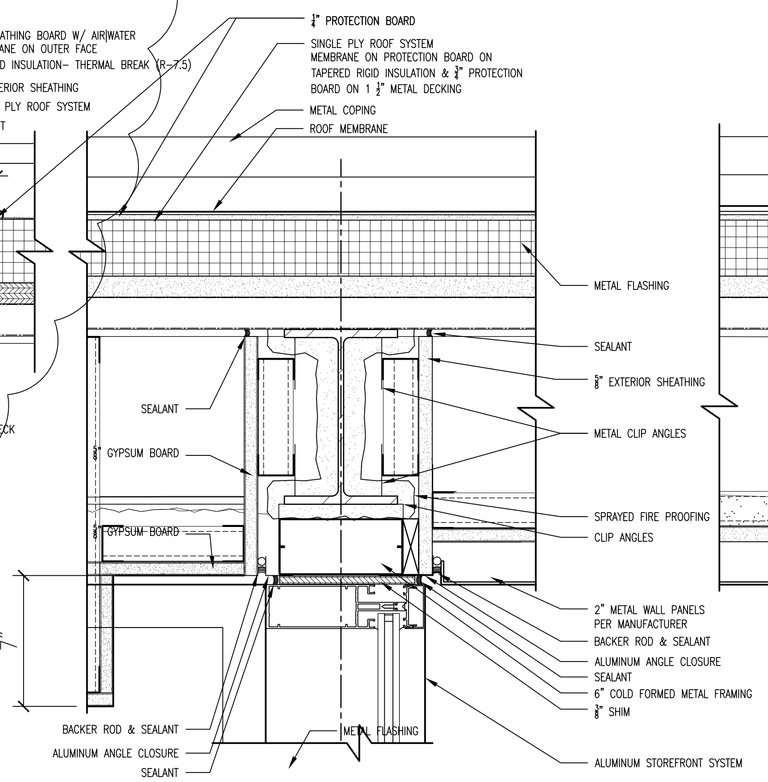

D6/A604 **DETAIL @ VESTIBULE MIDPOINT**
SCALE: 3" = 1'-0"

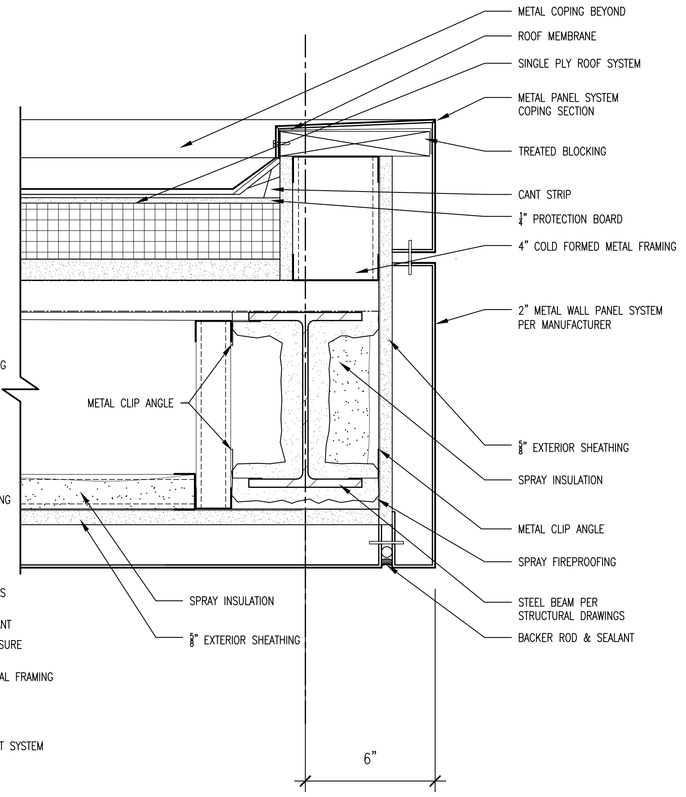

D8/A604 **DETAIL @ VESTIBULE ENDPOINT**
SCALE: 3" = 1'-0"

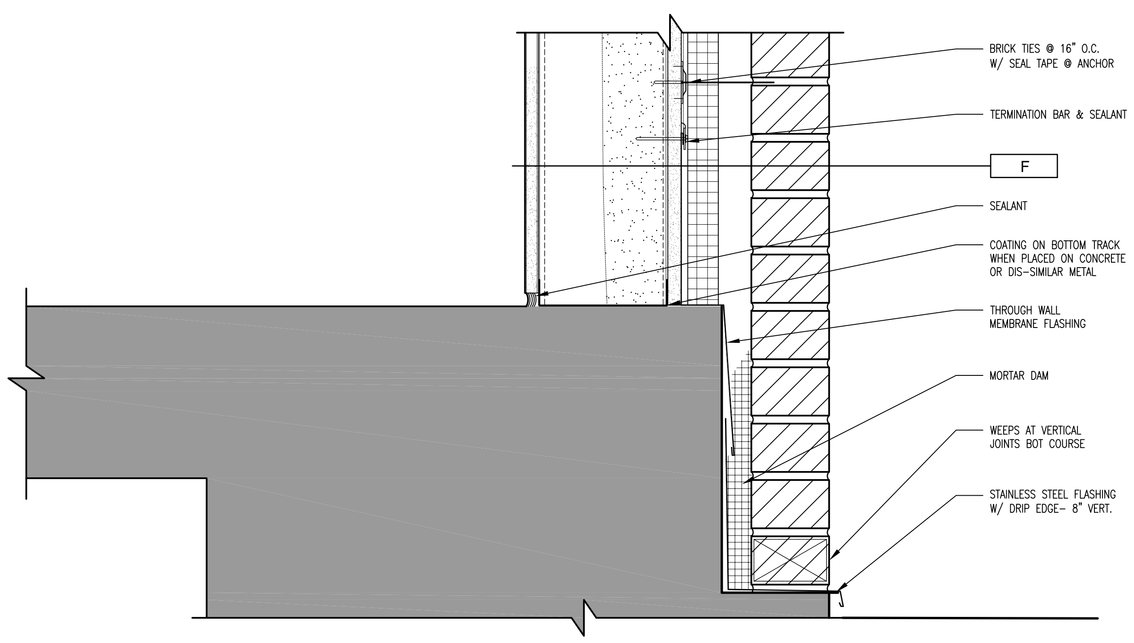

F1/A604 **DETAIL @ BRICK BASE**
SCALE: 3" = 1'-0"

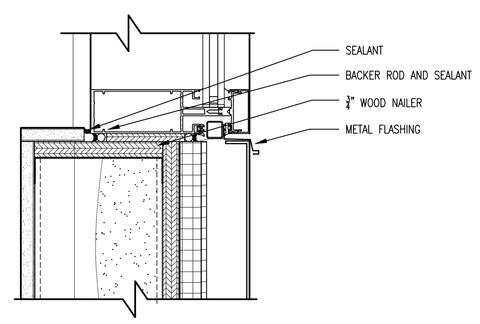

F4/A604 **DETAIL @ SILL & STUD**
SCALE: 3" = 1'-0"

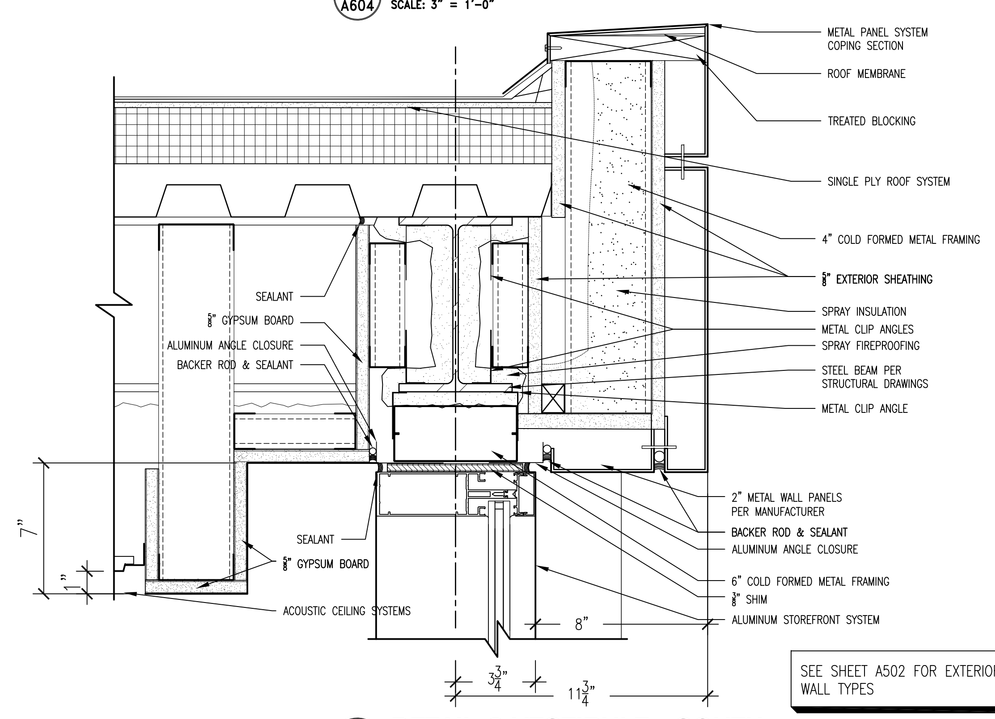

SEE SHEET A502 FOR EXTERIOR WALL TYPES

F8/A604 **DETAIL @ VESTIBULE - SOUTH**
SCALE: 3" = 1'-0"

100% CONSTRUCTION DOCUMENTS

Revisions:	Date

CONSULTANTS:

ARCHITECT/ENGINEERS:

13100 watertown plank road
suite 200
elm grove, wi 53122
p 262.641.0746
f 262.641.0584
nagel architects
IBC ENGINEERING SERVICES INC.

Drawing Title: VERTICAL SECTIONS
Approved: Project Director

Project Title: William S. Middleton VA Hospital Renovate Building 2
Location: Madison, WI
Date: MARCH 29, 2013
Checked: SAM
Drawn: CMF

Project Number: 607-12-115
Building Number: 2
Drawing Number: A604
Dwg. of

Office of Construction and Facilities Management
Department of Veterans Affairs

VA FORM 08-6231

Accompanying VA69D13B1000-A00002

4

SIGNAGE SCHEDULE

Number	Name	Type	Comments
B002	ELEVATOR EQUIPMENT ROOM		
001	VESTIBULE		
STAIR 2	STAIR TO UPPER LEVEL	F,K,O	
002	PUMP ROOM	A	
STAIR	STAIR TO LOWER LEVEL	F,K	
115	EXISTING OFFICE		
116	EQUIPMENT ROOM	A	
117	EXISTING BOILER ROOM		
118	EXISTING GENERATOR ROOM		
119	EXISTING STORAGE		
120	EXISTING LOADING SPACE		
100	VESTIBULE		ELECTRONIC STRIKE CARD READER?
101	LOBBY		ELECTRONIC STRIKE CARD READER
101A	ELEVATOR AT FIRST FLOOR	G,H	
102	JANITOR'S CLOSET	A	
102A	STAIR 1	F,K,L,N,O	
103	ENTRY/RECEPTION		ELECTRONIC STRIKE CARD READER
104	COPY/FAX/MAIL/PANTRY	A	
105	MEN'S TOILET	D	
106	WOMEN'S TOILET	D	
107	ELECTRICAL CLOSET	A	
108	VESTIBULE		
109	COATS		
110	OFFICE	A	
111	OFFICE	A	
112	CONFERENCE	A	
113	OFFICE	A	
114	OFFICE	A	
115	VESTIBULE		
115A	DOOR TO STAIR 2	F,K,L,N,O	
116	MECHANICAL	A	
201	LOBBY		
201A	ELEVATOR AT SECOND FLOOR	G,H	
202	JANITOR'S CLOSET	A	
201B	STAIR 1 AT SECOND FLOOR	F,K,L,N,O	
203	ENTRY	A	ELECTRONIC STRIKE CARD READER
204/205	STAFF LOUNGE/STAFF KITCHEN	A	
206	OFFICE	A	
207	OFFICE	A	
208	OFFICE	A	
209	OFFICE	A	
210	COPY/FAX/MAIL	A	
211	TELE/COM	A	
212A	STAIR 2	F,K,L,N,O	ELECTRONIC STRIKE CARD READER
213	WOMEN'S TOILET	D	
214	MEN'S TOILET	D	
215	COATS		
216	COATS		
301	LOBBY	A	ELECTRONIC STRIKE CARD READER
301A	ELEVATOR AT THIRD FLOOR	G,H	
301B	STAIR 1 AT THIRD FLOOR	F,K,L,N,O	
302	JANITOR'S CLOSET	A	
303	ENTRY		
303A	STORAGE	A	
304	MEN'S TOILET	D	
304A	MEN'S SHOWER		
305	WOMEN'S TOILET	D	
305A	WOMEN'S SHOWER		
308	STORAGE	A	
309	STORAGE	A	
309A	STAIR 2 AT THIRD FLOOR	F,K,L,N,O	ELECTRONIC STRIKE CARD READER

NOTES:

1. SEE SPECIFICATIONS FOR DETAILED DESCRIPTIONS OF SIGN TYPES.
2. COORDINATE LOCATION OF SIGNS WITH OTHER WALL MOUNTED EQUIPMENT/FURNISHINGS. OWNER TO APPROVE ALL SIGN LOCATIONS.
3. SEE MEP DRAWINGS FOR TYPICAL LIFE SAFETY LOCATIONS.

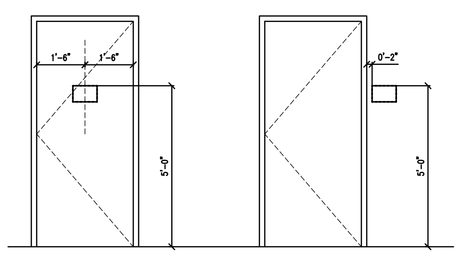

DOOR MOUNTED

WALL MOUNTED

LEGEND

TYPE A PRIMARY ROOM INDENTIFICATION
TYPE B PATIENT ROOM IDENTIFICATION
TYPE C CEILING MOUNTED DIRECTIONAL SIGN
TYPE D RESTROOM PICTOGRAM
TYPE E INFORMATIONAL SIGN
TYPE F STAIR PICTOGRAM
TYPE G WALL DIRECTIONAL SIGN
TYPE H ELEVATOR LOBBY SIGN
TYPE J DECORATIVE WALL SIGN
TYPE K STAIRWELL IDENTIFICATION SIGN
TYPE L EMERGENCY EXIT PLAN SIGN
TYPE M STAIR IDENTIFICATION SIGN
TYPE N FIRE DOOR SIGN
TYPE O DIRECTION OF EXIT SIGN

1 TYPICAL SIGNAGE HEIGHTS
1/2" = 1'-0"

DOOR SCHEDULE

Door No.	Room Name	SIZE Width	SIZE Height	SIZE Thickness	DOOR Type	DOOR Material	DOOR Glass	DOOR Fin.	FRAME Type	FRAME Material	FRAME Width	FRAME Fin.	DETAILS Sill	DETAILS Jamb	DETAILS Head	HARDWARE	FIRE RATED IN MIN.	COMMENTS
B002	ELEVATOR EQUIPMENT ROOM	3'-0"	7'-0"	1 3/4"	D1	WOOD	–	STN-1	F1	HM	–	PA-2	–	–	4"	15	90	–
001	VESTIBULE	3'-0"	7'-0"	1 3/4"	D3	HM	–	PA-2	F1	HM	–	PA-2	–	–	4"	7	90	–
002	STAIR TO LOWER LEVEL	3'-0"	7'-0"	1 3/4"	D3	HM	–	PA-2	F1	HM	–	PA-2	–	–	4"	15	90	–
003	STAIR 2	3'-0"	7'-0"	1 3/4"	D3	HM	–	PA-2	F1	HM	–	PA-2	–	–	4"	8	90	– PANIC HWD
004	EQUIPMENT ROOM	(2) 3'-0"	8'-0"	1 3/4"	D3	HM	–	PA-2	F1	HM	–	PA-2	–	–	4"	1	90	–
005	LOADING	3'-0"	7'-0"	1 3/4"	D3	HM	Y	PA-2	F1	HM	–	PA-2	–	–	4"	9		CLASSROOM LOCK
006	PUMP ROOM	3'-0"	7'-0"	1 3/4"	D3	HM	Y	PA-2	F1	HM	–	PA-2	–	–	4"	9		–
007	VESTIBULE 001	3'-0"	7'-0"	1 3/4"	D3	HM	Y	PA-2	F1	*	–	PA-2	–	–	–	–	–	ELECT. STRIKE CARD READER
008	OFFICE	3'-0"	7'-0"	1 3/4"	D3	HM	Y	STN	F1	ALUM	–	PA-2	–	–	4"	15	90	ELECT. STRIKE CARD READER
100	VESTIBULE	3'-6"	7'-0"	1 3/4"	D2	ALUM	Y	CLR	F1	ALUM	–	CLR	–	–	–	10	–	–
101	LOBBY	3'-6"	7'-0"	1 3/4"	D2	ALUM	Y	CLR	F1	ALUM	–	CLR	–	–	–	13	–	ELECT. STRIKE CARD READER
102	JANITOR CLOSET	3'-6"	7'-0"	1 3/4"	D1	HM	–	PA-2	F1	HM	–	PA-2	–	–	–	2	–	–
102A	STAIR 1	3'-6"	7'-0"	1 3/4"	D3	HM	Y	PA-2	F1	HM	–	PA-2	–	–	–	7	90	PANIC HWD
103	RECEPTION/ENTRY	3'-6"	7'-0"	1 3/4"	D2	WOOD	Y	STN-1	F1	HM	–	PA-2	–	–	–	14	–	ELECT. STRIKE CARD READER
104	COPY/FAX/MAIL/PANTRY	3'-0"	7'-0"	CASED OPENING					F1	HM	–	PA-2	–	–	–		–	
105	MEN'S TOILET	3'-0"	7'-0"	1 3/4"	D1	WOOD	–	STN-1	F1	HM	–	PA-2	–	–	–	5	–	
106	WOMEN'S TOILET	3'-0"	7'-0"	1 3/4"	D1	WOOD	–	STN-1	F1	HM	–	PA-2	–	–	–	5	–	
107	ELECTRICAL CLOSET	4'-0"	6'-10"	1 3/4"	D1	WOOD	–	PA-2	F1	HM	–	PA-2	–	–	–	2	45	PANIC HWD
109	COATS	3'-0"	7'-0"	1 3/4"	D1	WOOD	–	PA-2	F1	HM	–	PA-2	–	–	–		–	– SLIDING DOORS
110	OFICE	3'-0"	7'-0"	1 3/4"	D2	WOOD	Y	STN-1	F1	HM	–	PA-2	–	–	–	3	–	–
111	OFFICE	3'-0"	7'-0"	1 3/4"	D2	WOOD	Y	STN-1	F1	HM	–	PA-2	–	–	–	3	–	–
112	CONFERENCE	3'-0"	7'-0"	1 3/4"	D2	WOOD	Y	STN-1	F1	HM	–	PA-2	–	–	–	6		
113	OFFICE	3'-0"	7'-0"	1 3/4"	D2	WOOD	Y	STN-1	F1	HM	–	PA-2	–	–	–	3	–	–
114	OFFICE	3'-0"	7'-0"	1 3/4"	D2	WOOD	Y	STN-1	F1	HM	–	PA-2	–	–	–	3	–	–
115	STAIR 2	3'-0"	7'-0"	1 3/4"	D3	HM	Y	PA-2	F1	HM	–	PA-2	–	–	–	7	90	PANIC HWD E.S. CARD READER
116	MECHANICAL	3'-0"	7'-0"	1 3/4"	D1	HM	–	PA-2	F1	HM	–	PA-2	–	–	–	2	–	–
202	JANITOR CLOSET	3'-6"	7'-0"	1 3/4"	D1	HM	–	PA-2	F1	HM	–	PA-2	–	–	–	2	–	–
202A	STAIR 1	3'-6	7'-0"	1 3/4"	D3	HM	Y	PA-2	F1	HM	–	PA-2	–	–	–	7	90	– PANIC HWD
203	ENTRY	3'-6"	7'-0"	1 3/4"	D2	WOOD	Y	STN-1	F1	HM	–	PA-2	–	–	–	14	–	ELECT. STRIKE CARD READER
205	STAFF LOUNGE	3'-0"	7'-0"	1 3/4"	D2	WOOD	Y	STN-1	F1	HM	–	PA-2	–	–	–	6	–	–
206	OFFICE	3'-0"	7'-0"	1 3/4"	D2	WOOD	Y	STN-1	F1	HM	–	PA-2	–	–	–	3	–	–
207	OFFICE	3'-0"	7'-0"	1 3/4"	D2	WOOD	Y	STN-1	F1	HM	–	PA-2	–	–	–	3	–	–
208	OFFICE	3'-0"	7'-0"	1 3/4"	D2	WOOD	Y	STN-1	F1	HM	–	PA-2	–	–	–	3	–	–
209	OFFICE	3'-0"	7'-0"	1 3/4"	D2	WOOD	Y	STN-1	F1	HM	–	PA-2	–	–	–	3	–	–
210	COPY/FAX/MAIL	3'-0"	7'-0"	1 3/4"	D2	WOOD	Y	STN-1	F1	HM	–	PA-2	–	–	–	6	–	–
211	TELE/COMM	3'-0"	7'-0"	1 3/4"	D1	WOOD	–	PA-2	F1	HM	–	PA-2	–	–	–	2	–	E.S. CARD READER
212	STAIR 2	3'-0"	7'-0"	1 3/4"	D3	HM	Y	PA-2	F1	HM	–	PA-2	–	–	–	7	90	PANIC HWD E.S. CARD READER
213	WOMEN'S TOILET	3'-0"	7'-0"	1 3/4"	D1	WOOD	–	STN-1	F1	HM	–	PA-2	–	–	–	4	–	
214	MEN'S TOILET	3'-0"	7'-0"	1 3/4"	D1	WOOD	–	STN-1	F1	HM	–	PA-2	–	–	–	11	–	–
215	COATS	2'-6" PAIR	7'-0"	1 3/4"	D1	WOOD	–	PA-2	F1	HM	–	PA-2	–	–	–	–	–	– SLIDING DOORS
216	COATS	3'-0" PAIR	7'-0"	1 3/4"	D1	WOOD	–	PA-2	F1	HM		PA-2	–	–	–	–	–	– SLIDING DOORS
301	LOBBY	3'-6"	7'-0"	1 3/4"	D2	WOOD	Y	STN-1	F1	HM	–	PA-2	–	–	–	14	–	ELECT. STRIKE CARD READER
302	JANITOR CLOSET	3'-6"	7'-0"	1 3/4"	D1	HM	–	PA-2	F1	HM	–	PA-2	–	–	–	2	–	–
302A	STAIR 1	3'-6"	7'-0"	1 3/4"	D3	HM	Y	PA-2	F1	HM	–	PA-2	–	–	–	7	90	PANIC HWD
303	ENTRY	3'-0"	7'-0"	1 3/4"	D2	HM	Y	PA-2	F1	HM	–	PA-2	–	–	–	9	–	
303A	STORAGE	3'-6"	7'-0"	1 3/4"	D1	WOOD	–	PA-2	F1	HM	–	PA-2	–	–	–	2	–	STORAGE
304	MEN'S TOILET	3'-0"	7'-0"	1 3/4"	D1	WOOD	–	STN-1	F1	HM	–	PA-2	–	–	–	11	–	
304A	MEN'S SHOWER	3'-0"	7'-0"	1 3/4"	D1	HM	–	PA-2	F1	HM	–	PA-2	–	–	–	4	–	NO MARB. THRESHOLD
305	WOMON'S TOILET	3'-0"	7'-0"	1 3/4"	D1	WOOD	–	STN-1	F1	HM	–	PA-2	–	–	–	4	–	
305A	WOMEN'S SHOWER	3'-0"	7'-0"	1 3/4"	D1	HM	–	PA-2	F1	HM	–	PA-2	–	–	–	4	–	NO MARB. THRESHOLD
308	STORAGE	3'-0"	7'-0"	1 3/4"	D1	WOOD	–	PA-2	F1	HM	–	PA-2	–	–	–	1	–	
309	STORAGE	3'-0"	7'-0"	1 3/4"	D1	WOOD	–	PA-2	F1	HM	–	PA-2	–	–	–	2	–	
309A	STAIR 2	3'-0"	7'-0"	1 3/4"	D3	HM	Y	PA-2	F1	HM	–	PA-2	–	–	–	8	90	PANIC HWD E.S. CARD READER

* DOOR 007 HOLLOW METAL JAMB ONLY. SEE DETAIL (F3/A801)

DOOR SCHEDULE GENERAL NOTES

1. ALL WOOD DOORS TO BE FLAT PANEL WITH CLEAR PENETRATING SATIN STAIN, MATCH EXISTING IN SPECIES, GRADE AND FINISH.
2. SEE SPECIFICATIONS FOR HARDWARE GROUPS
3. REFER TO EP ELECTRICAL DRAWING SHEETS AND MOTOR WIRING SCHEDULE E-601 FOR FURTHER INFORMATION ON REQUIRED PUSH PLATES

DOOR & FRAME TYPES

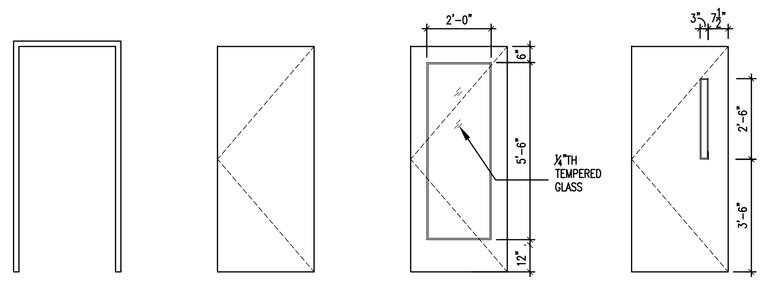

FRAME TYPE F1

DOOR TYPE D1

DOOR TYPE D2

DOOR TYPE D3

100% CONSTRUCTION DOCUMENTS

Revisions:	Date

CONSULTANTS:

ARCHITECT/ENGINEERS:

13100 watertown plank road
suite 200
elm grove, wi 53122
p 262.641.0746
f 262.641.0584

nagel architects

IBC ENGINEERING SERVICES INC.

Drawing Title: Door and Signage Schedules

Approved: Project Director

Project Title: William S. Middleton VA Hospital Renovate Building 2

Project Number: 607-12-115

Building Number: 2

Location: Madison, WI

Date: MARCH 29, 2013

Checked:

Drawn: CMF

Drawing Number: A800

Dwg. of

Office of Construction and Facilities Management

Department of Veterans Affairs

VA FORM 08-6231

Accompanying VA69D13B1000-A00002

-5-