## BASE BID MAINTENANCE STOCK

1. CONTRACTOR TO PROVIDE MAINTENANCE STOCK FOR THE OWNER UNDER THE BASE BID PRICE. THE FOLLOWING FIXTURES OR LAMPS SHOULD BE PROVIDED IN ADDITION TO THOSE SUPPLIED/INSTALLED ON THE DRAWINGS.

   TYPE A FIXTURES – (2) ADDITIONAL FIXTURES
   TYPE B FIXTURES – (5) ADDITIONAL FIXTURES
   TYPE C FIXTURES – (2) ADDITIONAL FIXTURES
   TYPE D FIXTURES – (2) ADDITIONAL FIXTURES
   TYPE G LAMPS – (5) ADDITIONAL LAMPS

## GENERAL NOTES

1. FURNISH ALL LABOR, MATERIAL AND APPURTENANCES NECESSARY FOR A COMPLETE AND OPERATIONAL SYSTEM AS SHOWN OR REQUIRED.
2. WORKMANSHIP SHALL REPRESENT THE HIGHEST STANDARD OF THE INDUSTRY. GUARANTEE ALL MATERIAL AND WORKMANSHIP FOR A PERIOD OF ONE YEAR AFTER ACCEPTANCE.
3. PERFORM ALL TESTS, ADJUSTMENTS, ETC. AS REQUIRED BY EQUIPMENT MANUFACTURER OR AUTHORITIES HAVING JURISDICTION. SUBMIT MANUFACTURERS O & M MANUALS FOR ALL EQUIPMENT.
4. CONTRACTORS SHALL VISIT SITE TO BECOME FAMILIAR WITH EXISTING CONDITIONS AS MAY EFFECT HIS OWN WORK. EACH CONTRACTOR SHALL COORDINATE HIS OWN WORK WITH THAT OF OTHER TRADES.
5. EACH CONTRACTOR SHALL FURNISH ALL CUTTING AND PATCHING REQUIRED FOR HIS OWN WORK. NO CUTTING SHALL BE PERFORMED WITHOUT PRIOR APPROVAL.
6. ALL EQUIPMENT, PIPES, DUCTS, ETC. SHALL BE INSTALLED CONCEALED ABOVE THE CEILING UNLESS SHOWN OTHERWISE.
7. ELECTRICAL SYSTEMS, NOT JUST COMPONENTS, ARE TO BE IDENTIFIED AS SUITABLE FOR THE SPECIFIC PURPOSE, FUNCTION, USE, ENVIRONMENT, OR APPLICATION. THE SUITABILITY OF THE EQUIPMENT MAY BE DETERMINED BY A QUALIFIED TESTING LABORATORY, INSPECTION AGENCY, OR OTHER APPROVED ORGANIZATION MAY INCLUDE LABELING OR LISTING. THIS ELECTRICAL CONTRACTOR IS RESPONSIBLE FOR ANY INSPECTIONS AND FEES ASSOCIATED WITH ELECTRICAL SYSTEMS CONFORMANCE WITH THIS REQUIREMENT.
8. LIGHTING
   A. ELECTRICAL CONTRACTOR TO CONNECT CIRCUITRY FOR ILLUMINATED EXIT SIGNS AND EMERGENCY LIGHTING IN LOCAL LIGHTING CIRCUIT, AHEAD OF ANY SWITCHING.

| xture No | Designator | Emergency Source | Special Instructions |
|---|---|---|---|
| 1 | A | EXISTING | |
| 2 | A | EXISTING | |
| 3 | A | EXISTING | RELOCATED TO OUTSIDE |
| 4 | A | EXISTING | |
| 5 | F | NEW FROM EXIT | NEW LIGHT FIXTURE |
| 6 | F | NEW FROM EXIT | NEW LIGHT FIXTURE |
| 7 | G | NEW FROM PANEL | RETROFIT LAMP |
| 8 | G | NEW FROM PANEL | RETROFIT LAMP |
| 9 | G | NEW FROM PANEL | RETROFIT LAMP |
| 10 | G | NEW FROM PANEL | RETROFIT LAMP |
| 11 | B | EXISTING | |
| 12 | B | EXISTING | |
| 13 | B | EXISTING | |
| 14 | B | EXISTING | |
| 15 | B | EXISTING | |
| 16 | B | EXISTING | |
| 17 | D | EXISTING | |
| 18 | B | NOT REQUIRED | |
| 19 | B | EXISTING | |
| 20 | B | EXISTING | |
| 21 | B | NOT REQUIRED | |
| 22 | B | NOT REQUIRED | |
| 23 | B | EXISTING | |
| 24 | B | EXISTING | |
| 25 | C | NEW FROM EXIT | |
| 26 | C | NEW FROM EXIT | |
| 27 | B | EXISTING | |
| 28 | B | EXISTING | |
| 29 | B | EXISTING | |
| 30 | B | EXISTING | |
| 31 | A | EXISTING | |
| 32 | A | EXISTING | |
| 33 | B | EXISTING | |
| 34 | B | EXISTING | |
| 35 | B | EXISTING | |
| 36 | B | EXISTING | |
| 37 | B | EXISTING | |
| 38 | B | NOT REQUIRED | |
| 39 | B | NOT REQUIRED | |
| 40 | A | NOT REQUIRED | |
| 41 | B | NOT REQUIRED | |
| 42 | B | NOT REQUIRED | |
| 43 | B | NEW FROM EXIT | |
| 44 | E | NEW FROM EXIT | |

| Fixture No | Designator | Emergency Source | Special Instructions |
|---|---|---|---|
| 45 | B | NOT REQUIRED | |
| 46 | B | NEW FROM EXIT | |
| 47 | B | NOT REQUIRED | |
| 48 | B | NOT REQUIRED | |
| 49 | C | EXISTING | |
| 50 | B | NEW FROM J-BOX | |
| 51 | B | NEW FROM J-BOX | |
| 52 | B | EXISTING | PROVIDE E-PWR TO J-BOX |
| 53 | B | EXISTING | |
| 54 | C | EXISTING | |
| 55 | C | EXISTING | |
| 56 | B | NEW FROM EXIT | |
| 57 | A | EXISTING | |
| 58 | B | EXISTING | |
| 59 | B | NEW FROM EXIT | |
| 60 | B | EXISTING | |
| 61 | B | EXISTING | |
| 62 | B | EXISTING | |
| 63 | B | EXISTING | |
| 64 | B | NEW FROM J-BOX | |
| 65 | B | NEW FROM J-BOX | |
| 66 | B | EXISTING | PROVIDE E-PWR TO J-BOX |
| 67 | C | EXISTING | |
| 68 | B | NEW FROM EXIT | |
| 69 | B | NEW FROM J-BOX | |
| 70 | B | NEW FROM J-BOX | |
| 71 | B | EXISTING | PROVIDE E-PWR TO J-BOX |
| 72 | B | NOT REQUIRED | |
| 73 | B | EXISTING | |
| 74 | B | EXISTING | |
| 75 | C | EXISTING | |
| 76 | B | NEW FROM EXIT | |
| 77 | B | EXISTING | |
| 78 | B | NOT REQUIRED | |
| 79 | B | NEW FROM J-BOX | |
| 80 | B | NEW FROM J-BOX | |
| 81 | B | EXISTING | PROVIDE E-PWR TO J-BOX |
| 82 | B | EXISTING | |
| 83 | B | EXISTING | |
| 84 | B | EXISTING | |
| 85 | B | EXISTING | |
| 86 | B | NEW FROM EXIT | |
| 87 | B | EXISTING | |
| 88 | B | NOT REQUIRED | |

| Fixture No | Designator | Emergency Source | Special Instructions |
|---|---|---|---|
| 89 | B | NOT REQUIRED | |
| 90 | B | EXISTING | |
| 91 | B | EXISTING | |
| 92 | B | NOT REQUIRED | |
| 93 | B | EXISTING | |
| 94 | B | NEW FROM J-BOX | |
| 95 | B | NEW FROM J-BOX | |
| 96 | C | EXISTING | PROVIDE E-PWR TO J-BOX |
| 97 | B | EXISTING | |
| 98 | B | EXISTING | |
| 99 | C | EXISTING | |
| 100 | C | EXISTING | |
| 101 | B | EXISTING | |
| 102 | B | EXISTING | |
| 103 | B | EXISTING | |
| 103A | C | NOT REQUIRED | 28-29 CONNECTOR |
| 104 | B | EXISTING | |
| 105 | B | NEW FROM J-BOX | |
| 106 | B | NEW FROM J-BOX | |
| 107 | B | EXISTING | PROVIDE E-PWR TO J-BOX |
| 108 | B | NEW GENERATOR | BATTERY UNDER BID ITEM 3 |
| 109 | B | NEW GENERATOR | BATTERY UNDER BID ITEM 3 |
| 110 | B | NEW GENERATOR | BATTERY UNDER BID ITEM 3 |
| 111 | B | NEW GENERATOR | BATTERY UNDER BID ITEM 3 |
| 112 | B | NEW GENERATOR | BATTERY UNDER BID ITEM 3 |
| 113 | B | NEW GENERATOR | BATTERY UNDER BID ITEM 3 |
| 114 | B | NEW GENERATOR | BATTERY UNDER BID ITEM 3 |
| 115 | B | NEW GENERATOR | BATTERY UNDER BID ITEM 3 |
| 116 | B | NEW GENERATOR | BATTERY UNDER BID ITEM 3 |
| 117 | B | NEW GENERATOR | BATTERY UNDER BID ITEM 3 |
| 192 | B | EXISTING | |
| 193 | B | NOT REQUIRED | |
| 194 | B | NOT REQUIRED | |
| 195 | B | NOT REQUIRED | |
| 196 | B | NOT REQUIRED | |
| 197 | B | NOT REQUIRED | |
| 198 | B | NOT REQUIRED | |
| 199 | B | NOT REQUIRED | |
| 200 | B | NOT REQUIRED | |
| 201 | B | NOT REQUIRED | |
| 202 | E | NEW FROM PANEL | |
| 203 | E | NEW FROM PANEL | |
| 204 | B | NOT REQUIRED | |
| 205 | B | NEW GENERATOR | BATTERY UNDER BID ITEM 3 |
| 206 | I | NEW GENERATOR | NO BATTERY UNDER BID ITEM 3 |
| 207 | I | NEW GENERATOR | NO BATTERY UNDER BID ITEM 3 |

FIXTURE COUNTS A=7 E=3
B=103 F=2
C=11 G=4
D=1 H=2
I=2

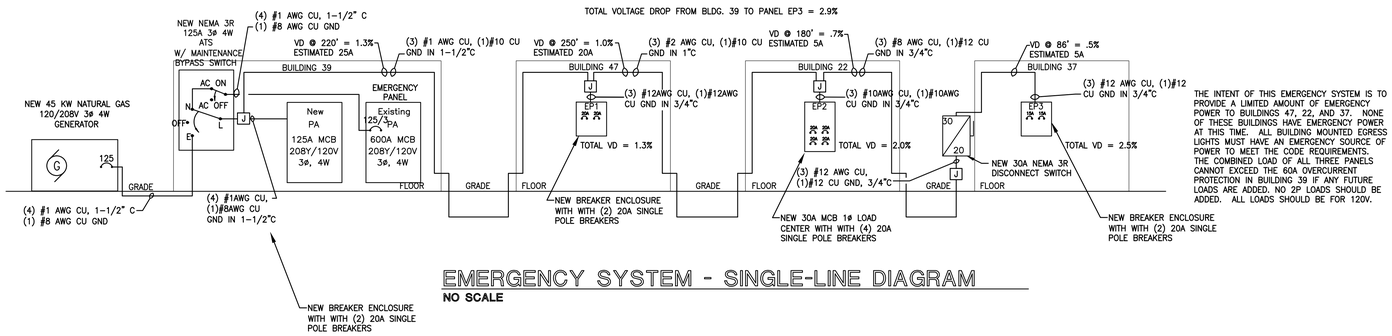


THE INTENT OF THIS EMERGENCY SYSTEM IS TO PROVIDE A LIMITED AMOUNT OF EMERGENCY POWER TO BUILDINGS 47, 22, AND 37. NONE OF THESE BUILDINGS HAVE EMERGENCY POWER AT THIS TIME. ALL BUILDING MOUNTED EGRESS LIGHTS MUST HAVE AN EMERGENCY SOURCE OF POWER TO MEET THE CODE REQUIREMENTS. THE COMBINED LOAD OF ALL THREE PANELS CANNOT EXCEED THE 60A OVERCURRENT PROTECTION IN BUILDING 39 IF ANY FUTURE LOADS ARE ADDED, NO 2P LOADS SHOULD BE ADDED. ALL LOADS SHOULD BE FOR 120V.

## EMERGENCY SYSTEM - SINGLE-LINE DIAGRAM

NO SCALE

### NEW PANEL "EP"

| DESCRIPTION LOAD | TRIP | CKT | VA | VA PER PHASE A | B | C | VA | CKT | TRIP | DESCRIPTION LOAD |
|---|---|---|---|---|---|---|---|---|---|---|
| PANEL A (CKT 1 LTG PUMP ROOM) | 20 | 1 | 1,000 | 2,000 | | | 1,000 | 2 | 20 | PANEL B (CKT 1 LIGHTS OFFICE) |
| PANEL A (CKT 3 LTG BOILER RM) | 20 | 3 | 1,000 | | 2,000 | | 1,000 | 4 | 20 | PANEL B (CKT 3 NEW COMPUTER) |
| PANEL A (CKT 5 LTG BOILER RM) | 20 | 5 | 1,000 | | | 1,500 | 500 | 6 | 20 | PANEL B (CKT 9 EXIT LIGHTS) |
| PANEL A (CKT 23 & 25 EMER CKT IN CHILLER BUILDING) | 50 | 7 | 4,160 | 5,160 | | | 1,000 | 8 | 20 | PANEL B (CKT 6 NEW COMPUTER) |
| | | 9 | 4,160 | | 11,440 | | 7,280 | 10 | 100 | PANEL B (CKT 37 & 39 BLDG 122) |
| PANEL A (CKT 6 LTG STAIRWELL) | 20 | 11 | 500 | | | 7,780 | 7,280 | 12 | | |
| PANEL A (CKT 8 LTG HOT WELL) | 20 | 13 | 1,000 | 2,000 | | | 1,000 | 14 | 20 | PANEL B (CKT 8 LTG & FIRE ALARM) |
| SPACE | -- | 15 | 0 | | 0 | | 0 | 16 | -- | SPACE |
| SPACE | -- | 17 | 0 | | | 0 | 0 | 18 | -- | SPACE |
| SPACE | -- | 19 | 0 | 0 | | | 0 | 20 | -- | SPACE |
| SPACE | -- | 21 | 0 | | 0 | | 0 | 22 | -- | SPACE |
| SPACE | -- | 23 | 0 | | | 0 | 0 | 24 | -- | SPACE |
| CONN. LOAD /PHASE (VA) | | | | 9,160 | 13,440 | 9,280 | | | | |
| CONN. LOAD /PHASE (AMPS) | | | | 76.3 | 112.0 | 77.3 | | | | |

[ ] MAIN LUGS ONLY ___ A.
[X] MAIN BREAKER 125 A.

TOTAL CONNECTED: 31.9 kVA
TOTAL AMPS: 88.5 AMPS
TOTAL DEMAND: 93.3 AMPS

SERVICE: 120/208V, 3PH 4W
FEEDER: SEE RISER
MOUNTING: SURFACE
AIC:

CKT. BREAKER NOTES FOR EXISTING OR NEW PANEL: A = ARC FAULT, H = HACR, L = LOCK-ON DEVICE.
CKT. BREAKER NOTES FOR EXISTING PANEL: R = EXISTING WITH REVISED LOADS, N = NEW BREAKER/LOAD, E = EXISTING TO REMAIN.

### NEW BREAKER ENCLOSURE "EP1"

| DESCRIPTION LOAD | TRIP | CKT | VA | VA PER PHASE A | B | C | VA | CKT | TRIP | DESCRIPTION LOAD |
|---|---|---|---|---|---|---|---|---|---|---|
| EMER/EGRESS LGTS | 20 | 1 | 500 | | 500 | | 0 | 2 | 20 | SPARE |
| CONN. LOAD /PHASE (VA) | | | | 0 | 500 | 0 | | | | |
| CONN. LOAD /PHASE (AMPS) | | | | 0.0 | 4.2 | 0.0 | | | | |

[ ] MAIN LUGS ONLY 30 A.
[ ] MAIN BREAKER ___ A.

TOTAL CONNECTED: 0.5 kVA
TOTAL AMPS: 1.4 AMPS
TOTAL DEMAND: 1.7 AMPS

SERVICE: 120/208V, 3PH 4W
FEEDER: SEE RISER
MOUNTING: SURFACE
AIC:

CKT. BREAKER NOTES FOR EXISTING OR NEW PANEL: A = ARC FAULT, H = HACR, L = LOCK-ON DEVICE.
CKT. BREAKER NOTES FOR EXISTING PANEL: R = EXISTING WITH REVISED LOADS, N = NEW BREAKER/LOAD, E = EXISTING TO REMAIN.

### NEW LOAD CENTER "EP2"

| DESCRIPTION LOAD | TRIP | CKT | VA | VA PER PHASE A | B | C | VA | CKT | TRIP | DESCRIPTION LOAD |
|---|---|---|---|---|---|---|---|---|---|---|
| EMER/EGRESS LGTS | 20 | 1 | 500 | | | 500 | 0 | 2 | 20 | SPACE |
| METASYS BUILDING AUTOMATION | 20 | 3 | 500 | | 1,000 | | 500 | 4 | 20 | FIRE ALARM SYSTEM |
| CONN. LOAD /PHASE (VA) | | | | 0 | 1,000 | 500 | | | | |
| CONN. LOAD /PHASE (AMPS) | | | | 0.0 | 8.3 | 4.2 | | | | |

[ ] MAIN LUGS ONLY ___ A.
[X] MAIN BREAKER 30 A.

TOTAL CONNECTED: 1.5 kVA
TOTAL AMPS: 4.2 AMPS
TOTAL DEMAND: 1.7 AMPS

SERVICE: 120/208V, 3PH 4W
FEEDER: SEE RISER
MOUNTING: SURFACE
AIC:

CKT. BREAKER NOTES FOR EXISTING OR NEW PANEL: A = ARC FAULT, H = HACR, L = LOCK-ON DEVICE.
CKT. BREAKER NOTES FOR EXISTING PANEL: R = EXISTING WITH REVISED LOADS, N = NEW BREAKER/LOAD, E = EXISTING TO REMAIN.

### NEW BREAKER ENCLOSURE "EP3"

| DESCRIPTION LOAD | TRIP | CKT | VA | VA PER PHASE A | B | C | VA | CKT | TRIP | DESCRIPTION LOAD |
|---|---|---|---|---|---|---|---|---|---|---|
| EMER/EGRESS LGTS | 20 | 1 | 500 | 500 | | | 0 | 2 | 20 | SPARE |
| CONN. LOAD /PHASE (VA) | | | | 500 | 0 | 0 | | | | |
| CONN. LOAD /PHASE (AMPS) | | | | 4.2 | 0.0 | 0.0 | | | | |

[X] MAIN LUGS ONLY 30 A.
[ ] MAIN BREAKER ___ A.

TOTAL CONNECTED: 0.5 kVA
TOTAL AMPS: 1.4 AMPS
TOTAL DEMAND: 1.7 AMPS

SERVICE: 120/208V, 3PH 4W
FEEDER: SEE RISER
MOUNTING: SURFACE
AIC:

CKT. BREAKER NOTES FOR EXISTING OR NEW PANEL: A = ARC FAULT, H = HACR, L = LOCK-ON DEVICE.
CKT. BREAKER NOTES FOR EXISTING PANEL: R = EXISTING WITH REVISED LOADS, N = NEW BREAKER/LOAD, E = EXISTING TO REMAIN.

Revisions: Date

## CONSULTANTS:

STATE OF KENTUCKY DENIS CORNEY 23513 LICENSED PROFESSIONAL ENGINEER
MAR 28 2013

## ARCHITECT/ENGINEERS:


HAL-PE ASSOCIATES
ENGINEERING SERVICES, INC.
823 Scott Blvd.
Covington, KY 41011-2447
(859) 431-6083 (office)
(859) 431-6136 (fax)
www.halpeinc.com
HAL-PE
A Veteran Owned Small Business


Drawing Title: PANEL SCHEDULES AND SINGLE-LINE DIAGRAM

Approved for Design Concept Only

100% CONSTRUCTION DOCUMENTS

Project Title: REPLACE EXTERIOR BUILDING LIGHTING
Project Number: 596-12-101
Building Number:
Location: LEESTOWN ROAD LEXINGTON, KENTUCKY
Drawing Number: EL007
Date: 03-28-2013
Checked: DRG
Drawn: LDG
Dwg. 8 of 9

Department of Veterans Affairs

VA FORM 08-6231