INFECTION CONTROL NOTES

LOW ASSESSMENT AREA:

NO WORK SHALL COMMENCE WITHOUT PRIOR SCHEDULING WITH AND APPROVAL OF CONSTRUCTION MANAGER. ALL FURNITURE, SHELVING AND EQUIPMENT TO REMAIN IN PLACE DURING CONSTRUCTION SHALL BE PROTECTED WITH PLASTIC SHEETING, SEALED WITH TAPE.

EQUIPMENT REQUIRING AIR CIRCULATION OR VENTILATION SHALL NOT HAVE AIR FLOW RESTRICTED WITH PLASTIC SHEETING.

TO MINIMIZE DUST AND DEBRIS, VACUUM TOP OF CEILING TILES TO EXTENT POSSIBLE BEFORE REMOVING FROM GRID. CLEAN WITH DAMP CLOTH ALL SPRINKLER PIPE PRIOR TO REMOVAL FROM CEILING SPACE.

CONTAIN ALL DEMOLITION PRODUCT IN SEALED BAGS OR SEALED PLASTIC SHEETING PRIOR TO REMOVAL FROM CONSTRUCTION AREA.

ALL CEILING TILES REMOVED FOR PIPE AND SPRINKLER INSTALLATION SHALL BE REINSTALLED AT THE END OF EVERY WORK SHIFT TO MAINTAIN SMOKE BARRIER. VACUUM CEILING TILES PRIOR TO REINSTALLATION.

VACUUM AREA OF CONSTRUCTION WITH HEPA FILTERED VACUUM AT THE END OF EVERY WORK SHIFT. DAMP MOP FLOOR.

REFER TO SPECIFICATIONS FOR ADDITIONAL REQUIREMENTS.

MEDIUM ASSESSMENT AREA:

NO WORK SHALL COMMENCE WITHOUT PRIOR SCHEDULING WITH AND APPROVAL OF CONSTRUCTION MANAGER AND SUITE, FLOOR OR DEPARTMENT PERSONNEL. ALL FURNITURE, SHELVING AND EQUIPMENT TO REMAIN IN PLACE DURING CONSTRUCTION SHALL BE PROTECTED WITH PLASTIC SHEETING, SEALED WITH TAPE.

EQUIPMENT REQUIRING AIR CIRCULATION OR VENTILATION SHALL NOT HAVE AIR FLOW RESTRICTED WITH PLASTIC SHEETING.

AREA OF CONSTRUCTION SHALL BE ISOLATED TO PREVENT DIRT AND DEBRIS FROM CONTAMINATING ADJACENT SPACES DURING CONSTRUCTION.

IF ISOLATION CANNOT BE ACCOMPLISHED BY CLOSING OF DOORS, INSTALL TEMPORARY FIRE-RETARDANT POLYSTYRENE BARRIER WALL (MINIMUM 6 MIL THICKNESS), FULL HEIGHT, FLOOR TO CEILING. TAPE FULL PERIMETER OF SHEETING AT BOTH CEILING AND FLOOR TO PROVIDE DUST TIGHT SEAL BETWEEN BARRIER WALL, CEILING AND FLOOR. ALTERNATE TEMPORARY WALL SUPPORT/HEADER SYSTEM WHICH PROVIDES DUST TIGHT SEAL IS ACCEPTABLE FOR USE WITH PRIOR APPROVAL OF HOSPITAL INFECTION CONTROL REPRESENTATIVE. PROVIDE ZIPPER ACCESS THROUGH TEMPORARY WALL AND MINIMUM 24" X 30" MULTI-SHEET, DISPOSABLE TACK MAT AT POINT OF ENTRY TO CONSTRUCTION AREA.

PROVIDE PORTABLE AIR SCRUBBER(S) WITH HEPA FILTRATION TO MAINTAIN NEGATIVE AIR PRESSURE WITHIN THE CONSTRUCTION AREA. PROVIDE ELECTRONIC DIFFERENTIAL PRESSURE MONITOR WITH CONTINUOUS READ-OUT AND PROGRAMMABLE ALARM SETPOINTS. FILTERED AIR SHALL DISCHARGE TO OUTSIDE THE BUILDING OR ABOVE CEILING.

CONTAIN ALL DEMOLITION PRODUCT IN SEALED BAGS OR SEALED PLASTIC SHEETING PRIOR TO REMOVAL FROM CONSTRUCTION AREA.

ALL CEILING TILES REMOVED FOR PIPE AND SPRINKLER INSTALLATION SHALL BE REINSTALLED AT THE END OF EVERY WORK SHIFT TO MAINTAIN SMOKE BARRIER. VACUUM CEILING TILES PRIOR TO FINAL REINSTALLATION.

VACUUM AREA OF CONSTRUCTION WITH HEPA FILTERED VACUUM AT THE END OF EVERY WORK SHIFT. DAMP MOP FLOOR.

DO NOT REMOVE BARRIERS FROM WORK AREA UNTIL SYSTEM HAS BEEN TESTED AND COMPLETED PHASE IS INSPECTED BY THE VA COTR, INFECTION CONTROL REPRESENTATIVE, AND SAFETY DEPARTMENT. CLEAN AREA THOROUGHLY BEFORE SCHEDULING INSPECTION.

CLEAN TEMPORARY BARRIER AND REMOVE CAREFULLY TO MINIMIZE SPREAD OF DIRT AND DEBRIS.

REFER TO SPECIFICATIONS FOR ADDITIONAL REQUIREMENTS.

HIGH ASSESSMENT AREA:

NO WORK SHALL COMMENCE WITHOUT PRIOR SCHEDULING WITH AND APPROVAL OF CONSTRUCTION MANAGER AND SUITE, FLOOR OR DEPARTMENT PERSONNEL. ALL FURNITURE, SHELVING AND EQUIPMENT TO REMAIN IN PLACE DURING CONSTRUCTION SHALL BE PROTECTED WITH PLASTIC SHEETING, SEALED WITH TAPE.

EQUIPMENT REQUIRING AIR CIRCULATION OR VENTILATION SHALL NOT HAVE AIR FLOW RESTRICTED WITH PLASTIC SHEETING.

AREA OF CONSTRUCTION SHALL BE ISOLATED TO PREVENT DIRT AND DEBRIS FROM CONTAMINATING ADJACENT SPACES DURING CONSTRUCTION.

ALL PERSONNEL ARE REQUIRED TO WEAR CLOTH OR PAPER COVERALLS AND SHOE COVERS IN AREA OF CONSTRUCTION. NEW SHOE COVERS SHALL BE USED EVERY TIME A WORKER ENTERS THE CONSTRUCTION AREA.

INSTALL TEMPORARY FIRE-RETARDANT POLYSTYRENE BARRIER WALL (MINIMUM 6 MIL THICKNESS), FULL HEIGHT, FLOOR TO CEILING. TAPE FULL PERIMETER OF SHEETING AT BOTH CEILING AND FLOOR TO PROVIDE DUST TIGHT SEAL BETWEEN BARRIER WALL, CEILING AND FLOOR. ALTERNATE TEMPORARY WALL SUPPORT/HEADER SYSTEM WHICH PROVIDES DUST TIGHT SEAL IS ACCEPTABLE FOR USE WITH PRIOR APPROVAL OF HOSPITAL INFECTION CONTROL REPRESENTATIVE. PROVIDE ZIPPER ACCESS THROUGH TEMPORARY WALL.

WHEN CEILING IS REMOVED, EXTEND TEMPORARY BARRIER WALL UP TO STRUCTURE ABOVE TO PREVENT INFILTRATION THROUGH CEILING SPACE.

PROVIDE MINIMUM 24" X 30" MULTI-SHEET, DISPOSABLE TACK MAT AT POINT OF ENTRY TO CONSTRUCTION AREA. REFRESH MAT FREQUENTLY DURING EVERY WORK SHIFT.

PROVIDE PORTABLE AIR SCRUBBER(S) WITH HEPA FILTRATION TO MAINTAIN NEGATIVE AIR PRESSURE WITHIN THE CONSTRUCTION AREA. PROVIDE ELECTRONIC DIFFERENTIAL PRESSURE MONITOR WITH CONTINUOUS READ-OUT AND PROGRAMMABLE ALARM SETPOINTS. FILTERED AIR SHALL DISCHARGE TO OUTSIDE THE BUILDING WHERE POSSIBLE.

INDOOR AIR QUALITY SHALL BE MONITORED BY THE HOSPITAL INFECTION CONTROL DEPARTMENT. ANY VIOLATIONS SHALL BE ADDRESSED IMMEDIATELY AND APPROVED BY THE HOSPITAL PRIOR TO PROCEEDING WITH WORK.

CONTAIN ALL DEMOLITION PRODUCT TIGHTLY COVERED CONTAINERS, SEALED BAGS OR SEALED PLASTIC SHEETING PRIOR TO REMOVAL FROM CONSTRUCTION AREA.

ALL CEILING TILES REMOVED FOR PIPE AND SPRINKLER INSTALLATION SHALL BE REINSTALLED AT THE END OF EVERY WORK SHIFT TO MAINTAIN SMOKE BARRIER. VACUUM CEILING TILES PRIOR TO FINAL REINSTALLATION.

VACUUM AREA OF CONSTRUCTION WITH HEPA FILTERED VACUUM AT THE END OF EVERY WORK SHIFT. DAMP MOP FLOOR.

DO NOT REMOVE BARRIERS FROM WORK AREA UNTIL SYSTEM HAS BEEN TESTED AND COMPLETED PHASE IS INSPECTED BY THE VA COTR, INFECTION CONTROL REPRESENTATIVE, AND SAFETY DEPARTMENT. CLEAN AREA THOROUGHLY BEFORE SCHEDULING INSPECTION.

CLEAN TEMPORARY BARRIER AND REMOVE CAREFULLY TO MINIMIZE SPREAD OF DIRT AND DEBRIS.

REFER TO SPECIFICATIONS FOR ADDITIONAL REQUIREMENTS.

SPS SECURITY REQUIREMENTS

1. ACCESS TO SPS/SPD UNIT SHALL BE THROUGH SECURED ENTRANCE ANTE-ROOM FROM THE NORTH CORRIDOR, WITH STAFF NOTIFICATION AND APPROVAL.
2. CONTRACTORS SHALL BE FULLY GOWNED WITH PROTECTIVE DISPOSABLE COVERALLS, GLOVES, HAIR AND BEARD COVERS, AND SHOE COVERS WHILE MOVING THROUGH THE SPS/SPD DEPARTMENT. INTO THE CONSTRUCTION BARRIER. PROTECTIVE WEAR SHALL BE REMOVED WHEN ENTERING THE CONSTRUCTION BARRIER, PUT ON AGAIN TO TRAVEL THROUGH THE DEPARTMENT, AND THEN REMOVED UPON EXITING THE DEPARTMENT AND ENTERING THE GENERAL HOSPITAL. GOWNING SHALL TAKE PLACE IN THE DEPARTMENT ANTE-ROOM(S) UPON ENTERING AND EXITING THE DEPARTMENT.
3. WORKERS WORKING EITHER IN THE SUBBASEMENT OR IN ROOM BA 113, SPS DECONTAMINATION CANNOT GO DIRECTLY TO ROOM BA 110, SPS PREPARATION. THEY MUST REMOVE ANY GOWN UP PPE (DECON) OR WIPE DOWN CLOTHING AND BOOTS (SUBBASEMENT), BEFORE GOING TO THE SPS PREP ANTE-ROOM (B) FOR STERILE GOWN UP PPE.

FIRE WATCH REQUIREMENTS

1. CONTRACTOR SHALL BE RESPONSIBLE TO PROVIDE FIRE WATCH PERSONNEL DURING CONSTRUCTION OPERATIONS WHILE SPRINKLER SYSTEM, OR PORTION THEREOF, IS DISABLED.
2. ALL FIRE WATCH PROCEDURES SHALL BE PERFORMED PER VA SPECIFIED STANDARDS AND POLICIES, NFPA, OSHA 1910.252.
3. WHEN THE DAILY MODIFICATIONS OF THE SYSTEM HAVE BEEN COMPLETED OR WHENEVER THE FIRE SPRINKLER PERSONNEL LEAVE THE CONSTRUCTION AREA, THE FIRE SPRINKLER SYSTEM MUST BE RESTORED TO A FUNCTIONAL CONDITION.
4. UNDER NO CIRCUMSTANCES SHALL THE SYSTEM REMAIN DISABLED FOR MORE THAN FOUR HOURS WITHIN ONE 24 HOUR PERIOD WITHOUT THE BENEFIT OF A VA HOT WORK PERMIT AND IMPLEMENTATION OF INTERIM LIFE SAFETY MEASURES.
5. REFER TO SPECIFICATION FOR ADDITIONAL REQUIREMENTS.

FIRE PROTECTION NOTES

1. SCOPE OF FIRE SPRINKLER WORK IS TO REMOVE AND REPLACE FIRE SPRINKLER PIPING AND SPRINKLER HEADS LOCATED WITHIN CARTWASH ENCLOSURE. REFER TO AREA INDICATED ON CONSTRUCTION DRAWINGS.
2. PIPE SIZE AND ROUTING SHALL MATCH EXISTING. REPLACE EXISTING HANGERS.
3. TO EXTENT POSSIBLE, NEW SPRINKLER HEADS SHALL REPLACE EXISTING IN SAME LOCATION.
4. PIPING AND SPRINKLER HEADS SHOWN ON FLOOR PLANS IS TAKEN FROM EXISTING RECORD DRAWINGS AND SITE SURVEY. BEST KNOWN INFORMATION HAS BEEN PROVIDED. CONTRACTOR SHALL FIELD VERIFY EXACT CONDITIONS PRIOR TO CONSTRUCTION. ALLOW FOR ADDITIONAL FITTINGS AND PIPE OFFSETS.
5. T-DRILL OR PULLED TEE FITTINGS SHALL NOT BE USED.
6. CONTRACTOR SHALL SLEEVE AND SEAL ALL SPRINKLER PIPE PENETRATIONS THROUGH EXISTING PARTITIONS TO MAINTAIN INTEGRITY OF EXISTING PARTITION RATING.
7. PROTECT PIPING AND HEADS FROM CORROSION. PROVIDE WAX-COATED HIGH TEMPERATURE HEADS WITHIN CARTWASH ENCLOSURE. PAINT SPRINKLER PIPING.

INFECTION CONTROL RISK ASSESSMENT

BASEMENT (EXCLUDING SPS/SPD

LOW ASSESSMENT AREA

SPS/SPD DEPARTMENT:

HIGH ASSESSMENT AREA

PENETRATIONS

1. X-RAY SLAB AT LOCATIONS OF ALL NEW FLOOR PENETRATIONS PRIOR TO CORE DRILLING. AVOID CUTTING REBAR. NO PENETRATIONS ARE ALLOWED THROUGH THE EXISTING THICKENED SLAB WHICH EXTENDS APPROXIMATELY SIX FEET FROM EDGE OF COLUMNS. PIPING FOR FIXTURES LOCATED ABOVE THE THICKENED SLAB SHALL BE OFFSET ABOVE FLOOR IN WALL SPACE OR BELOW CASEWORK TO AVOID STRUCTURAL SLAB PENETRATION.
2. ALL PENETRATIONS MADE IN FLOORS, CEILINGS, FIRE/SMOKE BARRIERS, PARTITIONS, ETC. CREATED FOR THE PURPOSE OF INSTALLING/REMOVING PIPE, CONDUIT, CABLE, OR DUCTWORK, OTHER MODIFICATIONS INCLUDING INCIDENTAL DAMAGE, OR THE REMOVAL OF SUCH ITEMS WILL BE REPAIRED/SEALED WITH FIRE STOPPING MATERIAL UPON COMPLETION OF THE WORK AND DOCUMENTED AS REPAIRED. FIRE STOPPING MATERIAL MUST MEET NFPA 101 (2012) 8.3.5 AND 8.4.4 STANDARDS TO ENSURE THE ORIGINAL INTEGRITY AND RATING FOR THE PENETRATED SURFACE IS RESTORED. TEMPORARY METHODS OF SEALING SHALL BE USED IF WORK CANNOT BE COMPLETED WITHIN 24 HOURS. THIS POLICY APPLIES TO ALL VERTICAL AND HORIZONTAL PENETRATIONS AND TO ALL ECHCS STAFF AND CONTRACTORS. A PENETRATION PERMIT WILL BE OBTAINED 24 HOURS IN ADVANCE, FROM THE FACILITIES SAFETY OFFICE, PRIOR TO THE WORK. UPON COMPLETIONS OF ANY PENETRATION REPAIR, A VISUAL INSPECTION FOR APPROVAL MUST BE REQUESTED FROM THE COTR AND SAFETY OFFICE.

CONSTRUCTION PHASING AND SCHEDULING

1. CONSTRUCTION SHALL BE COMPLETED IN PHASES TO ALLOW FOR UNINTERRUPTED USE OF HOSPITAL FACILITIES. REFER TO ARCHITECTURAL PLANS FOR SEQUENCE OF CONSTRUCTION AND PHASING REQUIREMENTS.
2. SCHEDULE WORK AFTER HOURS AND DURING THE WEEKEND TO MINIMIZE DOWN-TIME OF EQUIPMENT IN THE SPS, AND ADJOINING AREAS.
3. ALL CEILING TILES MUST BE REPLACED AT END OF WORK SHIFT.
4. ALL PLUMBING SERVICES OUTSIDE OF CONSTRUCTION PARTITIONS SHALL BE FULLY OPERATIONAL AT END OF WORK SHIFT. SCHEDULE DEMOLITION AND NEW CONSTRUCTION ACCORDINGLY.
5. SCHEDULE DOWN-TIME (DATE, TIME AND DURATION) OF ALL SPS EQUIPMENT WITH COTR IN ADVANCE. NO EQUIPMENT OR SERVICES SHALL BE DISCONNECTED OR RENDERED NON-FUNCTIONAL WITHOUT PRIOR SCHEDULING AND APPROVAL OF COTR.

PLUMBING DEMOLITION NOTES

1. CONTRACTOR SHALL REMOVE EXISTING SERVICES INCLUDING WATER, WASTE, AND VENT PIPING SERVING FIXTURES AND/OR CONNECTIONS TO EQUIPMENT, WHICH ARE SHOWN ON THE DRAWINGS TO BE REMOVED OR RELOCATED. PERMANENTLY SEAL AND CAP SERVICES NEXT TO MAIN SERVICE LINES ABOVE CEILINGS, IN WALLS, OR BELOW FLOORS. EXISTING PLUMBING FIXTURES AND RELATED ITEMS WHICH ARE TO BE REMOVED SHALL BE SUBMITTED TO THE OWNER. ITEMS THE OWNER WISHES TO RETAIN SHALL BE DELIVERED TO STORAGE WHERE DIRECTED BY OWNER. ITEMS THE OWNER DOES NOT WISH TO RETAIN SHALL BE LEGALLY DISPOSED.
2. DRAWINGS SHOW KNOWN EXISTING SERVICES IN REASONABLE PROXIMITY. CONTRACTOR SHALL FIELD VERIFY EXACT LOCATIONS.
3. EXISTING FIXTURES, EQUIPMENT, SERVICES, AND CONNECTIONS WHICH ARE DAMAGED DURING CONSTRUCTION SHALL BE REWORKED OR REPLACED AS REQUIRED TO PROVIDE ORIGINAL OPERATION.
4. PENETRATIONS THROUGH EXISTING PARTITIONS AND FLOORS SHALL BE SLEEVED AND SEALED TO MAINTAIN INTEGRITY OF EXISTING PARTITIONS AND FLOOR RATING.
5. EXISTING PLUMBING SERVICES NOT SHOWN ON DRAWINGS SHALL REMAIN AS IS, UNLESS NOTED OTHERWISE.
6. CONTRACTOR SHALL COORDINATE THE INTERRUPTION OF EXISTING SERVICES WITH THE OWNER, PRIOR TO CONSTRUCTION.
7. EXISTING FIXTURES, EQUIPMENT CONNECTIONS, AND SERVICE LINES SHALL BE VERIFIED FOR EXACT LOCATIONS AND SIZE. IF DEVIATIONS ARE FOUND, CONTRACTOR SHALL BRING THEM TO THE ARCHITECT'S ATTENTION FOR COORDINATION.

GENERAL NOTES

1. CONTRACTOR SHALL PROVIDE FINAL PLUMBING CONNECTIONS TO EQUIPMENT PROVIDED BY OTHERS PER EQUIPMENT SUPPLIER INSTRUCTIONS. FURNISH SHUTOFF VALVES, P-TRAPS, VACUUM BREAKERS, P.R.V'S, AND PIPING PER MANUFACTURER REQUIREMENTS.
2. COORDINATE PIPE INSTALLATION WITH ALL TRADES.
3. FIXTURES, EQUIPMENT, CONNECTIONS, AND PIPING SHALL BE FURNISHED AND INSTALLED TO MEET OR EXCEED STATE AND LOCAL CODES AND REQUIREMENTS.
4. FURNISH AND INSTALL SHOCK ARRESTORS AT CONNECTIONS TO FLUSH VALVES AND AT ALL QUICK CLOSING INLET VALVES.
5. PENETRATIONS THROUGH PARTITIONS AND FLOORS SHALL BE SLEEVED AND SEALED TO MAINTAIN INTEGRITY OF PARTITION AND FLOOR RATING.
6. DRAWINGS ARE SCHEMATIC IN NATURE. CONTRACTOR IS RESPONSIBLE FOR COORDINATING EXACT ROUTING OF ALL SERVICES WITH EXISTING CONDITIONS AND WITH ALL OTHER TRADES.
7. VALVES LOCATED ABOVE CEILING SHALL BE ACCESSIBLE. LOCATE NO MORE THAN 3 FEET ABOVE CEILING WITH CLEAR ACCESS BELOW.

DRAWING INDEX

SHEET NO.	SHEET TITLE
P000	PLUMBING LEGEND, INDEX, AND NOTES
P101	PARTIAL BASEMENT PLUMBING/FIRE PROTECTION DEMOLITION PLANS
P201	PARTIAL BASEMENT PLUMBING/FIRE PROTECTION PLANS
P202	PARTIAL BASEMENT PLUMBING PLAN, PARTIAL SUB-BASEMENT PLUMBING PLAN

LEGEND

NOT ALL SYMBOLS MAY BE USED

SYMBOL	ABBREV.	DESCRIPTION	SYMBOL	ABBREV.	DESCRIPTION
(P– ")		SAN. WASTE/VENT STACK NO.	— CA —	CA	COMPRESSOR AIR
		STACK SIZE	— AI —	AI	AIR COMPRESSOR INTAKE
(AW– ")		ACID WASTE/VENT STACK NO.	— VE —	VE	VACUUM PUMP EXHAUST
		STACK SIZE	— LV —	LV	LAB VACUUM
	VTR	VENT THRU ROOF	— LA —	LA	LAB COMPRESSED AIR
(SW– ")		STORM DOWNSPOUT NO.	(MGO)		MEDICAL GAS OUTLET
		STACK SIZE	— G —	G	GAS
(F– ")		FIRE RISER NO.	— DI —	DI	DEIONIZED WATER
		RISER SIZE			
——Ø	FCO	FLOOR CLEANOUT			
—-—	CW	COLD WATER			CLEANOUT (ABOVE CEILING)
—--—	HW	HOT WATER SUPPLY			PIPE TURN DOWN
—---—	HWR	HOT WATER RETURN			PIPE TURN UP
—W—	W	WASTE LINE (BELOW SLAB)			BALANCING VALVE
—W—	W	SANITARY (ABOVE SLAB)			CIRCUIT SETTER
—V—	V	VENT			THERMOMETER
— SW —	SW	STORM WATER			UNION
—SSD—	SSD	SUB-SURFACE DRAIN			STRAINER
— F —	F	FIRE			REDUCER
— AS —	AS	AUTOMATIC SPRINKLER			GAGE
— AV —	AV	ACID VENT			FLEXIBLE JOINT
— AW —	AW	ACID WASTE			ANCHOR
— GW —	GW	GREASE WASTE			TWO-WAY CONTROL VALVE
—D—	D	DRAIN LINE			TWO-WAY CONTROL VALVE (ELEC.)
— A —	A	MEDICAL AIR			BALL VALVE
— V —	V	VACUUM			GATE VALVE
— N2 —	N2	NITROGEN			CHECK VALVE
— N2O —	N2O	NITROUS OXIDE		PRV	PRESSURE REDUCING VALVE
— 02 —	02	OXYGEN		RV	PRESSURE RELIEF VALVE
—WAGD—	WAGD	WASTE ANESTHESIA GAS DISPOSAL			
—CO2—	CO2	CARBON DIOXIDE			SHOCK ARRESTOR

CARTRIDGE FILTER SCHEDULE

MARK	SERVICE/LOCATION	CONNECTION SIZE	FLOW GPM	HOUSING	FILTER CARTRIDGE
CF/CW-B.1	COLD WATER (2) WASHER/DISINFECTOR UNITS (1) CART WASHER NEW MECH CLOSET	2"	48	304 SS 10.5"x30" 1/2" DRAIN	(4) 20"x2.5" 100% POLYPROPYLENE, 145 F TEMP RATING, NOMINAL MICRON RATING: 1
CF/HW-B.2	HOT WATER (2) WASHER/DISINFECTOR UNITS (1) CART WASHER NEW MECH CLOSET	2"	48	304 SS 10.5"x30" 1/2" DRAIN	(4) 20"x2.5" 100% POLYPROPYLENE, 145 F TEMP RATING, NOMINAL MICRON RATING: 1
CF/CW-B.3	COLD WATER SPS CLEANING EQUIPMENT SPS WORK SINKS DI SYSTEM PRE-FILTER MECH CLOSET BA	2"	48	304 SS 10.5"x30" 1/2" DRAIN	(4) 20"x2.5" 100% POLYPROPYLENE, 145 F TEMP RATING, NOMINAL MICRON RATING: 1
CF/HW-B.4	HOT WATER SPS CLEANING EQUIPMENT SPS WORK SINKS MECH CLOSET BA	2"	30	304 SS 10.5"x20" 1/2" DRAIN	(5) 10"x2.5" 100% POLYPROPYLENE, 145 F TEMP RATING, NOMINAL MICRON RATING: 1

PROVIDE HOUSING WITH INLET/OUTLET SAMPLE VALVES, INLET/OUTLET PRESSURE GAUGES AND DRAIN VALVE.

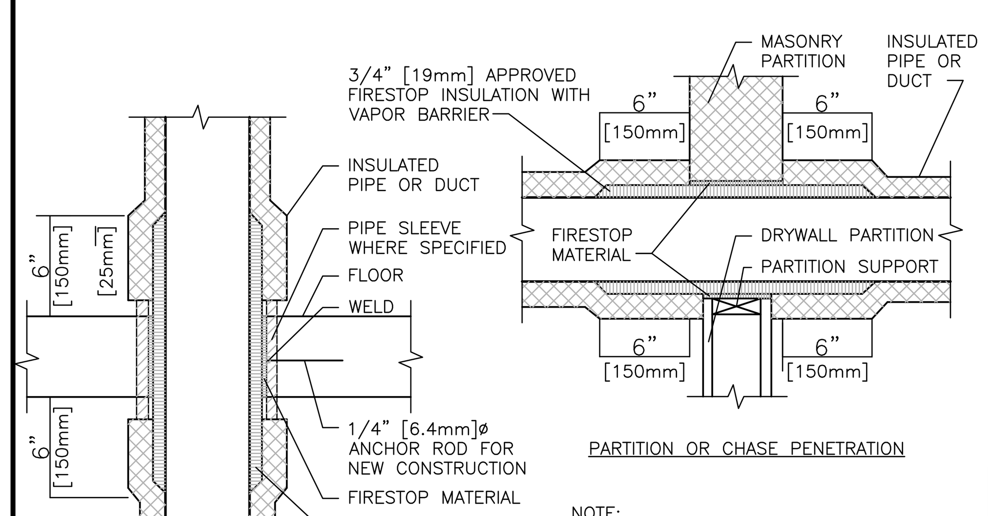

NOTE:

1. APPLICABLE TO PENETRATIONS OF ALL FIRE RATED MEMBRANES, IN ACCORDANCE WITH NFPA 101. REFER TO SPECIFICATIONS SECTION 07 84 00, FIRE STOPPING SYSTEMS.

02 PIPE/DUCT PENETRATION OF SMOKE/FIRE BARRIERS

NTS

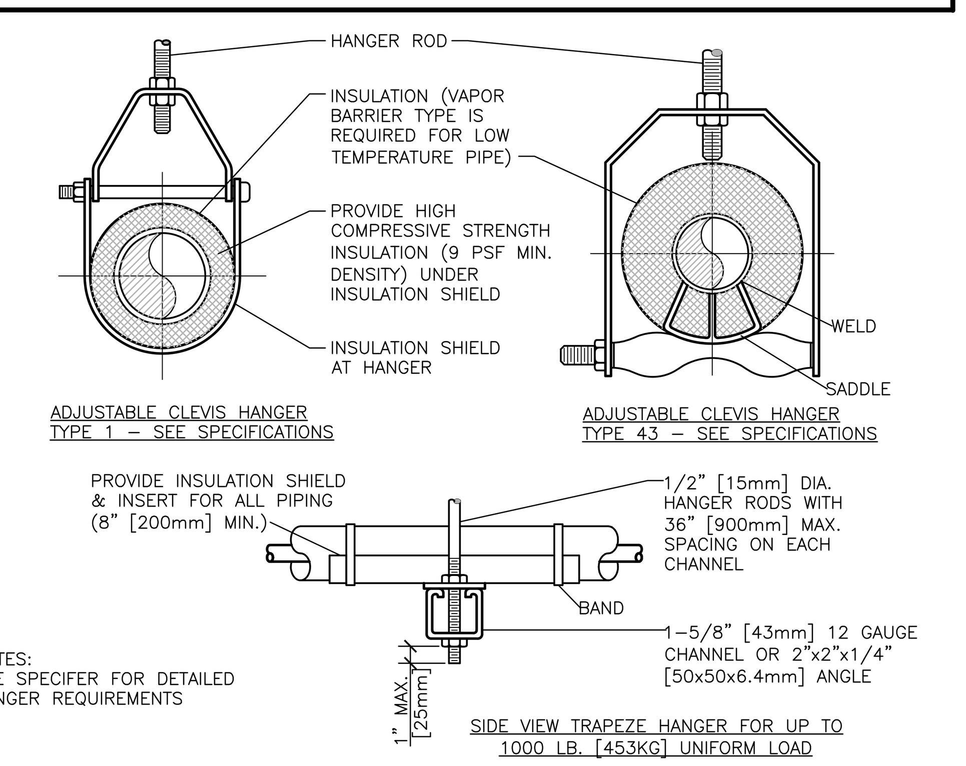

NOTES:
SEE SPECIFER FOR DETAILED HANGER REQUIREMENTS

MAXIMUM PIPE/TUBING SUPPORT SPACING

NOM. SIZE IN. [mm]	THRU 3/4 THRU [20]	1 [25]	1 1/4 [32]	1 1/2 [40]	2 [50]	2 1/2 [65]	3 [75]	4 [100]	5 [125]	6 [150]	8 [200]	10 [250]	12 [300]	14 [350]	16 [400]	18 [450]	20 [500]	24 [600]
PIPE FT. [mm]	7 [2100]	7 [2100]	7 [2100]	9 [2700]	10 [3000]	11 [3400]	12 [3700]	14 [4100]	16 [4900]	17 [5200]	19 [5800]	22 [6700]	23 [7000]	25 [7600]	27 [8200]	28 [8500]	30 [9100]	32 [9600]
TUBING FT. [mm]	5 FT [1500]	6 [1800]	7 [2100]	8 [2400]	8 [2400]	9 [2700]	10 [3000]	12 [3700]	13 [4000]	14 [4100]	16 [4900]	–	–	–	–	–	–	–

NOTE: FOR TRAPEZE HANGER TAKE SPACING OF SMALLEST SIZE ON TRAPEZE.

01 PIPE HANGERS

NTS

COLORADO LICENSED LEE M. NORDHOLM 45671 2/12/13 PROFESSIONAL ENGINEER

THIS DOCUMENT WAS ORIGINALLY ISSUED AND SEALED BY LEE NORDHOLM, REGISTRATION NO. 45671 ON FEBRUARY 12, 2013. THE ORIGINAL DOCUMENT IS STORED AT SMITH SECKMAN & REID INC.

Revisions:	Date

CONSTRUCTION DOCUMENTS
FULLY SPRINKLERED

Smith Seckman Reid, Inc.
8055 E. Tufts Avenue, Suite 1100
Denver, Colorado 80237
(303) 779-1222
FAX: (303) 694-9144
www.ssr-inc.com
SSR JOB #: 12530330

EFT ARCHITECTS
265 EAST 100 SOUTH SUITE 350
SALT LAKE CITY, UTAH 84111-1604
801.521.8564 WWW.EFTARCH.COM

DEPARTMENT OF VETERANS AFFAIRS
MEDICAL CENTER
1055 Clermont Street
Denver, Colorado, 80220

Drawing Title	PLUMBING LEGEND AND NOTES
Approved: Project Director	
Project Title	SPS PIPING AND EQUIPMENT SITE PREP
Location	DENVER VA MEDICAL CENTER
Date	12 FEB, 2013
Checked	LMN
Drawn	DLB
Project Number	554-12-810
Building Number	BUILDING 1
Drawing Number	P000
Dwg.	11 of 19

Office of Construction and Facilities Management

Department of Veterans Affairs

VA FORM 08-6231

T:\Team53\2012\12530330 Denver VA- SPS Piping\Constructs\Plbg\VAMC_P000.dwg 2-11-13 04:52:51 PM shem