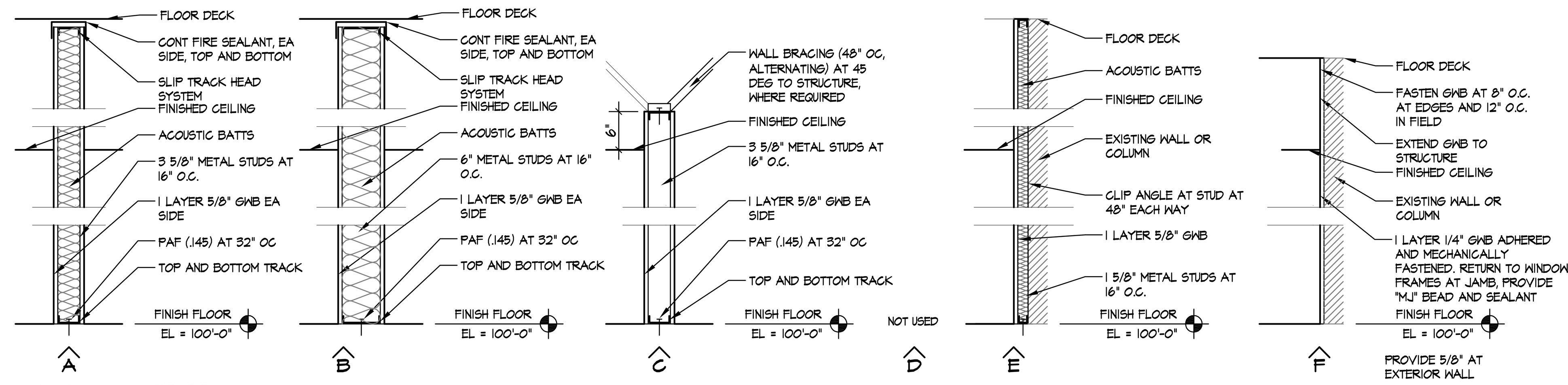

WALL TYPES

NTS

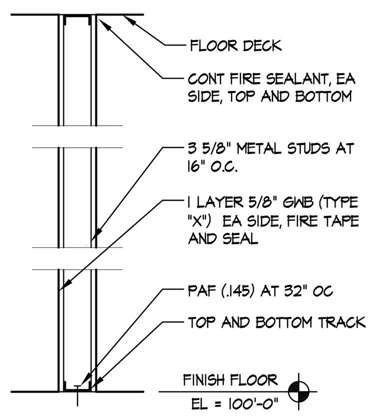

TEMP 1 HOUR FIRE RATED PARTITION

TEMPORARY PARTITION TYPES

NTS

TEMPORARY PARTITION TYPE NOTES:

1. PROVIDE 20 MIN FIRE RATED DOOR AT ALL TEMPORARY (TEMP) 1 HOUR RATED PARTITIONS WITH RATED HARDWARE AND FRAME.
2. ALL TEMPORARY (TEMP) PARTITIONS TO RECEIVE LEVEL 1 FINISH.

WALL TYPE NOTES:

1. ALL RATED WALLS TO BE CONTINUOUS WHEN INTERSECTED BY WALLS OF LESSER OR NO RATING.
2. ALIGN FRAMING WITH EXISTING FACE OF WALL WHERE OCCURRING.
3. PROVIDE CASING, TEAR AWAY, "L", "J" OR "MJ" BEADS AT EXISTING DOOR FRAMES, CEILINGS, SILLS AND OTHER OPENINGS AND TRANSITIONS AS REQUIRED. ALL BEAD SHALL BE "MUD ON" TYPE UNLESS INDICATED OTHERWISE.
4. WALL TYPE "F" TYPICAL AT ALL EXISTING WALLS UNLESS OTHERWISE NOTED, NOT ALL LOCATION INDICATED ON DRAWINGS.
5. ALL NEW PARTITION TO HAVE ACOUSTIC BATTS UNLESS NOTED OTHERWISE.

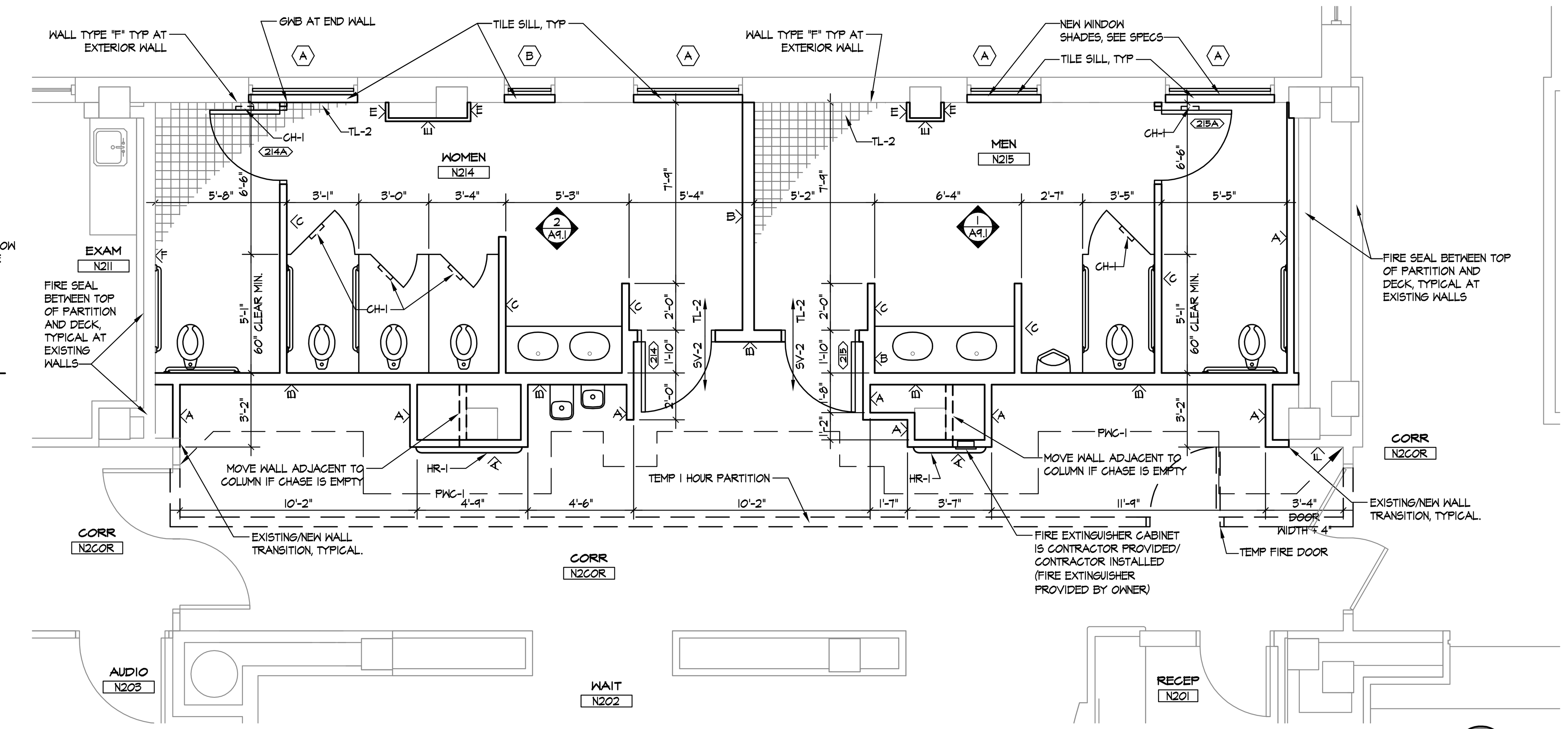

2 FLOOR PLAN – 2nd FLOOR
A2.1 SCALE: 1/8" = 1'-0"

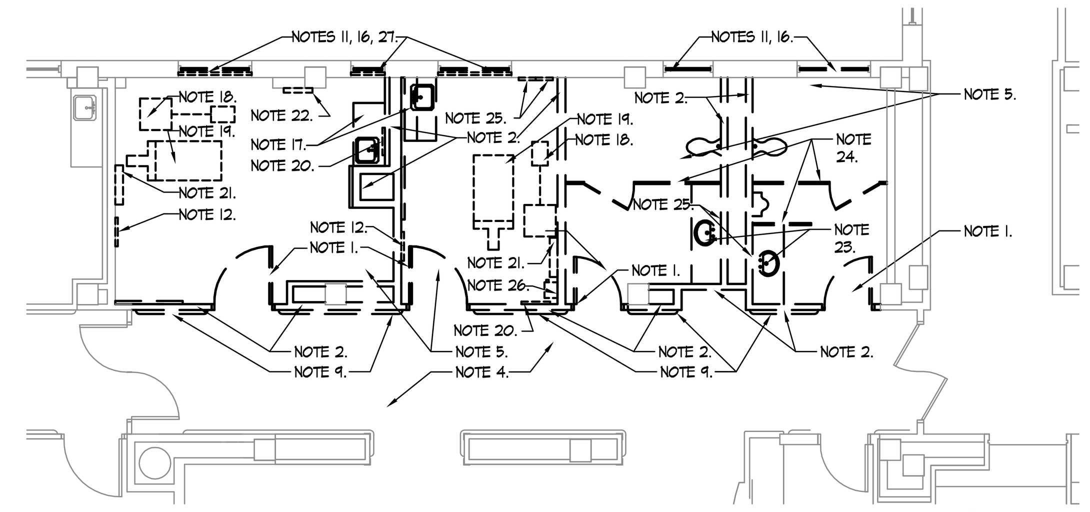

1 DEMOLITION PLAN – 2nd FLOOR
A2.1 SCALE: 1/8" = 1'-0"

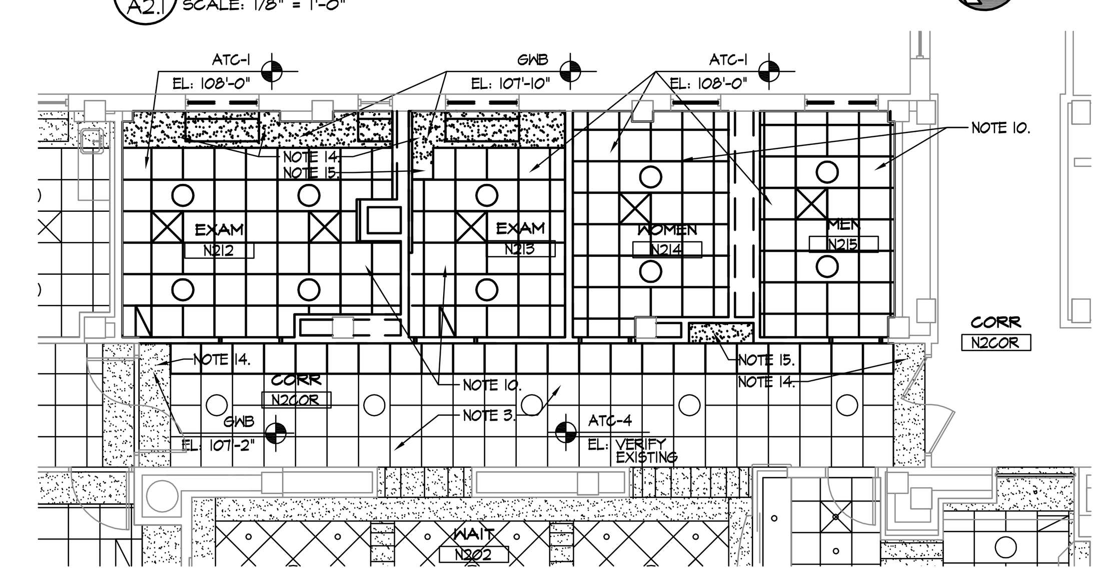

3 DEMOLITION CEILING PLAN – 2nd FLOOR
A2.1 SCALE: 1/8" = 1'-0"

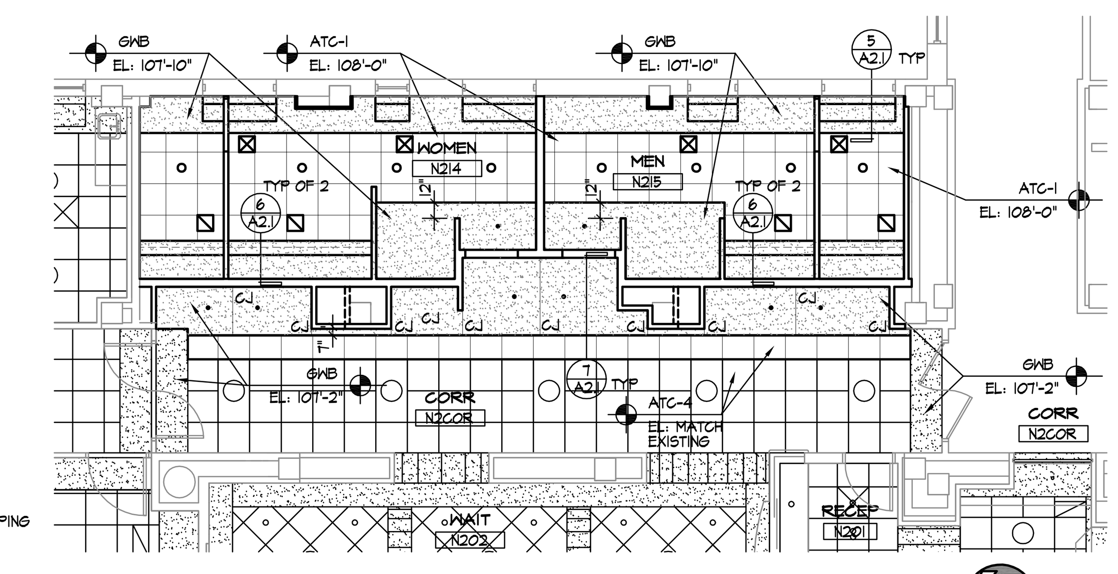

4 REFLECTED CEILING PLAN – 2nd FLOOR
A2.1 SCALE: 1/8" = 1'-0"

ROOM FINISH SCHEDULE

ROOM NO	ROOM NAME	FLOOR	BASE	WALLS N FINISH	WALLS E FINISH	WALLS S FINISH	WALLS W FINISH	CEILING MATERIAL	CEILING HEIGHT	CEILING SOFFITS	NOTES
N214	WOMEN	TL-2	TL-1	TL-1/TL-2 EPT-4	TL-1/TL-2 EPT-4	TL-1/TL-2 EPT-4	TL-1/TL-2 EPT-3	SEE RCP	SEE RCP	EPT-2	
N215	MEN	TL-2	TL-1	TL-1/TL-2 EPT-4	TL-1/TL-2 EPT-4	TL-1/TL-2 EPT-4	TL-1/TL-2 EPT-3	SEE RCP	SEE RCP	EPT-2	
N2COR	CORR	SV-2	VB-3	PT-1 PWC-1	PT-1 PWC-1	PT-1 PWC-1	PT-1 PWC-1	SEE RCP	SEE RCP	PT-5	

INTERIOR COLOR KEY

1. PAINT (PT-)

CODE	MFG.	COLOR/ #	GLOSS	
PT-1	SHERWIN WILLIAMS	ACCESSIBLE BEIGE SW 7036	LEVEL 5	
PT-2	SHERWIN WILLIAMS	ACCESSIBLE BEIGE SW 7036	LEVEL 6	
PT-3	NOT USED			
PT-4	NOT USED			
PT-5	SHERWIN WILLIAMS	ZURICH WHITE SW 7626	LEVEL 1	
PT-6	SHERWIN WILLIAMS	NOMADIC DESSERT SW 6107	LEVEL 5	LEVEL 6 AT DOOR FRAMES

2. EPOXY PAINT (EPT-) WATERBORNE

CODE	MFG.	COLOR/ #		
EPT-1	NOT USED			
EPT-2	SHERWIN WILLIAMS	ZURICH WHITE SW7626	LEVEL 1	
EPT-3	SHERWIN WILLIAMS	TATAMI TAN SW 6116	LEVEL 5	LEVEL 6 AT DOOR FRAMES
EPT-4	SHERWIN WILLIAMS	NOMADIC DESSERT SW 6107	LEVEL 5	LEVEL 6 AT DOOR FRAMES

3. PROTECTIVE WALL COVERING (PWC-)

CODE	MFG.	THICKNESS	COLOR/ PATTERNOTE	
PWC-1	KOROGARD	.060"	OYSTER	MATCH HEIGHT WITH EXISTING

4. HANDRAIL (HR-)

CODE	MFG.	MFG. #	COLOR/ PATTERN	NOTE
HR-1	ACROVYN	HRB-10C	314 MAHOGANY, 108 BLACK REVEAL	MATCH HEIGHT WITH EXISTING

PROVIDE NEW SECTIONS, RETURNS AND OTHER ACCESSORIES AS REQUIRED FOR A COMPLETE INSTALLATION.

5. WOOD STAIN (WS-)

CODE	MFG.	COLOR	LOCATION
WS-1		MATCH VT INDUSTRIES GRASSLAND	SEE DRAWINGS

6. PLASTIC LAMINATE (PL-)

CODE	MFG.	COLOR/ PATTERN	LOCATION
PL-1	FORMICA	4875-60 WESTERN BRONZE	CASEWORK FRONTS

7. SOLID SURFACE (SS#)CM AT BACKSPLASHES AND 3 CM FOR TOPS

CODE	MFG.	COLOR/ STYLE	LOCATION
SS-1	ZODIAQ	SMOKEY TOPAZ	COUNTERTOPS AND WINDOW SILLS AS INDICATED
SS-2	CORIAN	BISQUE	INTEGRAL SINKS

8. SHEET VINYL (SV-)

CODE	MFG.	PATTERN/ COLOR
SV-1	NOT USED	
SV-2	MANNINGTON	VIVENDI COLLECTION, PERENNIAL, COLOR VIV023 PARCHMENT

9. ACOUSTICAL TILE CEILING (ATC-)

CODE	MFG.	MFG. #	COLOR
ATC-1 (2'X2')	USG	86185, MARS CLIMAPLUS, SQUARE EDGE	WHITE
GRID	USG	DX /DXL 15/16" HEAVY DUTY	WHITE
ATC-2	NOT USED		
ATC-3	NOT USED		
ATC-4 (2'X2')	USG	86185, MARS CLIMAPLUS, TEGULAR EDGE	WHITE
GRID	USG	DX /DXL 15/16" HEAVY DUTY	WHITE

10. TILE (TL-) WITH URETHANE GROUT, COLOR TBD

CODE	MFG.	COLOR	
TL-1	FLORIM USA	STONEFIRE RUST	PROVIDE BULLNOSE, COVE BASE, INSIDE AND OUTSIDE UNITS WHERE REQ'D 12"X12" AT WALL, 18"X18" AT FLOOR
TL-2	FLORIM USA	STONEFIRE ALMOND	2"X2" MOSAIC

11. VINYL BASE (VB-)

CODE	MFG.
VB-1	NOT USED
VB-2	NOT USED
VB-3	MATCH EXISTING

ACCESSORIES SCHEDULE

-EXISTING ROOM ACCESSORIES TO BE TEMPORARILY REMOVED AND THEN REINSTALLED, AS REQUIRED FOR NEW WORK.
-SEE ELEVATIONS AND ADA GUIDELINES FOR MOUNTING HEIGHTS/ LOCATIONS.
-SEE SPECS FOR BASIS OF DESIGN.

CODE	ACCESSORY	OWNER PROVIDED	OWNER INSTALLED	CONTRACTOR PROVIDED	CONTRACTOR INSTALLED	NOTES
PTD-1	PAPER TOWEL DISPENSER	X			X	4.
TP-1	TOILET PAPER HOLDER	X			X	
SD-1	SOAP DISPENSER	X			X	4.
GB-1	GRAB BAR 42"			X	X	
GB-2	GRAB BAR 36"			X	X	
GB-3	GRAB BAR 18"			X	X	
MR-1	MIRROR - METAL FRAMED			X	X	
ND-1	NAPKIN DISPOSAL			X	X	
CH-1	COAT HOOK			X	X	

ACCESSORIES NOTES:

VERIFY LOCATION AND MOUNTING HEIGHTS OF ALL ITEMS WITH OWNER AND OR USERS PRIOR TO INSTALLATION. "CONTRACTOR INSTALLED" SHALL INCLUDE REMOVAL OF ITEM FROM ITS CURRENT LOCATION. ALL ITEMS NOT NOTED ON THIS DRAWING, CONTRACTOR SHALL VERIFY FULL SCOPE OF REMOVALS, REINSTALLATION AND MOVING OF ITEMS DURING PREBID WALKTHROUGH.

1. PROVIDE BACKING IN WALL FOR ALL WALL MOUNTED ITEMS.
2. MOUNT ALL ITEMS PER ADA REQUIREMENTS.
3. "OWNER "PROVIDED" MAY INCLUDE EXISTING SALVAGED ITEMS.
4. PROVIDE AT ALL SINKS.
5. SEE INTERIOR ELEVATIONS FOR LOCATION OF ADDITIONAL ACCESSORIES.

GENERAL STRUCTURAL NOTES:

GENERAL PROJECT NOTES

1. ALL DIMENSIONS AND CONDITIONS SHOWN ON THE DRAWINGS SHALL BE VERIFIED BY THE CONTRACTOR PRIOR TO FABRICATION OR CONSTRUCTION.
2. THE ARCHITECT SHALL BE NOTIFIED IN WRITING OF ANY EXISTING CONDITIONS WHICH DIFFER FROM THOSE SHOWN ON THE CONTRACT DOCUMENTS.
3. THE CONTRACTOR SHALL BE RESPONSIBLE FOR THE PROTECTION OF THE EXISTING BUILDING DURING THE EXECUTION OF THE CONTRACT.

CONCRETE NOTES:

1. PATCHING MATERIAL FOR CONCRETE FLOORS SHALL BE EITHER DURACRETE BY L&M CONSTRUCTION CHEMICALS, INC., OR EMACO R310 CI, BY BASF CONSTRUCTION CHEMICALS, LLC. EITHER MATERIAL MAY BE EXTENDED WITH PEA GRAVEL IN ACCORDANCE WITH THE MANUFACTURER'S RECOMMENDATIONS. ALL MANUFACTURER'S RECOMMENDATIONS SHALL BE FOLLOWED.

STRUCTURAL STEEL:

1. STRUCTURAL STEEL SHALL BE DESIGNED, FABRICATED AND ERECTED IN ACCORDANCE WITH THE AISC "SPECIFICATIONS FOR THE DESIGN, FABRICATION AND ERECTION OF STRUCTURAL STEEL BUILDINGS" AND THE "CODE OF STANDARD PRACTICE", LATEST EDITIONS.
2. ANGLES SHALL BE ASTM A36.
3. STEEL SHALL BE THOROUGHLY CLEANED OF MILL SCALE PRIOR TO APPLICATION OF THE PRIMER IN ACCORDANCE WITH SSPC SP-2 OR SP-3.
4. SHOP PAINT STRUCTURAL STEEL WITH ONE COAT, 2 MILS OF FABRICATOR'S STANDARD PRIMER. DO NOT PAINT THE CONTACT SURFACES OF STEEL IN CONTACT WITH CONCRETE.
5. THE CONTRACTOR SHALL SUBMIT STRUCTURAL STEEL SHOP DRAWINGS TO THE ARCHITECT.

STEEL DECK:

1. STEEL DECK SHALL CONFORM TO THE STEEL DECK SPECIFICATIONS AND LOAD TABLES OF THE STEEL DECK INSTITUTE (SDI).
2. THE STEEL ROOF DECK SHALL BE 9/16" DEEP, 24 GAGE, TYPE C.
3. METAL DECK SHALL BE GALVANIZED.
4. THE CONTRACTOR SHALL SUBMIT STEEL DECK SHOP DRAWINGS TO THE ARCHITECT.

INFECTION CONTROL NOTES:

INFECTION CONTROL WORK TO TAKE PLACE PRIOR TO DEMOLITION.

A. MODIFY EXISTING CEILING AS REQUIRED FLUSH WITH CONSTRUCTION WALL.
B. PROVIDE NEGATIVE AIR MACHINE WITH HEPA FILTER IN ALL DEMOLITION AREAS.
C. PROVIDE TEMPORARY TEMPORARY 1 HOUR RATED CONSTRUCTION WALL AS INDICATED ON PLANS. EXTEND TO FLOOR STRUCTURE ABOVE. SEAL AROUND ALL PIPES, CONDUIT AND DUCTS AND OTHER OBSTACLES WITH APPROVED FIRESTOPPING. PROVIDE LOCKABLE DOOR AND KEYS TO DESIGNATED VA PERSONAL. SEE GENERAL REQUIREMENTS FOR ADDITIONAL REQUIREMENTS.
D. PROVIDE STICKY MATS AT ALL ENTRANCES TO CONSTRUCTION AREAS. ALL MATS TO BE MAINTAINED BY CONTRACTOR.
E. CONTRACTOR IS RESPONSIBLE FOR THE CONTROL OF DUST DURING THE ENTIRE CONSTRUCTION SCHEDULE, SEE SPECIFICATIONS FOR ADDITIONAL DUST CONTROL MEASURES.

CONSTRUCTION SCHEDULING NOTES:

1. CORRIDOR AND COMMON WORK TO OCCUR DURING THE HOURS OF 4:30 P.M. AND 9:00 P.M. DURING ANY PHASE AND SHALL BE COORDINATED WITH VA COTR AND USERS.
2. NO WORK SHALL OCCUR FROM THE HOURS OF 9:00 P.M. AND 6:00 A.M.
3. CONTRACTOR TO ALLOW UP TO ONE WEEK WITHIN SCHEDULE FOR MOVING OWNER'S EQUIPMENT, FURNITURE, AND OTHER ITEMS AS INDICATED ON THESE DRAWINGS FROM EXISTING AREAS INTO COMPLETED AREAS OR WORK AS DIRECTED BY VA COTR AND USERS. OWNER WILL MOVE IT ITEMS, E.G. COMPUTERS, MONITOR, ETC.

FIRESTOPPING NOTES:

FN1. PROVIDE FIRE STOPPING AT ALL NEW AND EXISTING FLOOR, WALL AND ROOF PENETRATIONS, TYPICAL IN ALL AREAS OF WORK (NOT REFERENCED).

FN2. FIRE SEAL GAPS BETWEEN WALL AND FLOOR STRUCTURE, PIPES, CONDUIT, DUCTS AND OTHER PENETRATIONS THROUGH WALL WITH APPROVED MATERIAL. 2 HOUR AT STAIR 3 AND 1 HOUR ALL OTHER AREAS.

LEGEND:

EXISTING CONSTRUCTION TO REMAIN
EXISTING CONSTRUCTION TO BE REMOVED
NEW PARTITIONS

FRAMING/ FINISHING NOTES:

1. ALL INTERIOR GWB SHALL BE MOLD AND MOISTURE RESISTANT 5/8" F.C. TYPE X, UNLESS OTHERWISE NOTED.
2. CONSTRUCT WALL SYSTEMS TO CONFORM TO THE DETAILED REQUIREMENTS OF THE MOST CURRENT "FIRE RESISTIVE DESIGN MANUAL, GYPSUM ASSOCIATION, 810 FIRST STREET NE, #510, WASHINGTON, DC 20002."
3. WHERE WALLS ARE INDICATED TO BE 1-HR. FIRE RESISTIVE CONSTRUCTION, TAPE ALL JOINTS, INCLUDING THOSE JOINTS ABOVE ACOUSTICAL CEILINGS.
4. WHERE EXISTING WALLS ARE INDICATED TO RECEIVE A FIRE OR SMOKE RATING, VERIFY CONDITIONS AND MODIFY WALL CONSTRUCTION ACCORDINGLY.
5. ALL GWB TO BE SMOOTH FINISH THROUGHOUT, UNLESS NOTED OTHERWISE.
6. FIELD VERIFY DETAILED WALL CONSTRUCTION AND REVIEW PLAN LAYOUT W/ EXISTING CONDITIONS IN THE FIELD. WHERE FIELD CONDITIONS CONFLICT W/ WALL CONSTRUCTION DETAILS, MODIFY WALL CONSTRUCTION AS PER ARCHITECT'S DIRECTIVE AT NO ADDITIONAL COST TO THE OWNER.
7. ALL 3 5/8" AND 6" MTL. STUD INTERIOR WALL FRAMING EXTENDING TO UNDERSIDE OF MTL. ROOF DECK SHALL BE A MIN. OF 20 GA. AT 16" O.C. MAX. SPACING.
8. ALL 3 5/8" MTL. STUD INTERIOR WALL FRAMING W/ WALL HUNG CABINETS SHALL BE A MIN. OF 20 GA @ 16" O.C. MAX. SPACING.
9. ALL 3 5/8" MTL. STUD INTERIOR WALL FRAMING NOT EXTENDING TO UNDERSIDE OF ROOF DECK SHALL BE A MIN. OF 20 GA. @ 16" O.C.
10. ALL CONSTRUCTION TO HAVE A MINIMUM STC RATING OF 45 AT ALL CONDITIONS.
11. ALL GYP.BD. SHALL EXTEND TO STRUCTURE, UNLESS OTHERWISE NOTED. (U.O.N.)
12. WHERE STUD FRAMING IS EXTENDED TO STRUCTURE ABOVE, PROVIDE 3" LEG TOP SLIP TRACK.

GENERAL ROOM FINISH NOTES:

A. CONTRACTOR SHALL REMOVE EXISTING FINISHES AS REQUIRED FOR NEW WORK.
B. PROTECT EXISTING FINISHES, CABINETS, DOORS AND OWNER'S EQUIPMENT DURING CONSTRUCTION.
C. REMOVE ALL RADIATOR COVERS IN ALL ROOMS TO RECEIVE ANY WORK. REMOVE FINISH TO BEAR METAL, REPAINT AND REINSTALL WITH NEW HARDWARE.
D. PROVIDE GWB AT WINDOW JAMBS AND HEAD.
E. PROVIDE FLOOR LEVELING AND UNDERLAYMENT AS REQUIRED FOR ALL NEW FLOORING.
F. NOT ALL FINISHES INDICATED ON DRAWINGS, PROVIDE AS REQUIRED TO COMPLY WITH NEW WORK AND DESIGN INTENT.

FLOOR PLAN GENERAL NOTES:

DRAWINGS BASED ON LIMITED FIELD VERIFICATION, ADJUST PARTITIONS, CHASES AND OTHER WORK AS REQUIRED TO ACCOMMODATE EXISTING CONDITIONS. CONTACT ARCHITECT FOR DIRECTION IF FIELD CONDITIONS VARY FROM DESIGN INTENT.

1. ALL DIMENSIONS TO FACE OF STUD OR CENTERLINE OF COLUMN UNLESS NOTED OTHERWISE.
2. PATCH AND PREP ALL EXISTING WALLS AS REQUIRED TO ACCOMMODATE NEW WALL FINISHES, TYPICAL.
3. FOR NEW FLOOR PENETRATION PROVIDE A CLEAR SPACE BETWEEN ADJACENT HOLES EQUAL TO THE DIAMETER OF THE LARGER HOLE. DO NOT DRILL HOLES IN JOISTS.
4. PATCH AND PREP ALL FLOOR SURFACES AS REQUIRED TO ACCOMMODATE NEW FLOORING FINISHES. USE SELF LEVELING OR FEATHERING UNDERLAYMENT AS REQUIRED, SEE DETAIL 10/A6.1. TYPICAL. SEE SPECIFICATIONS FOR ADDITIONAL LEVELING REQUIREMENTS.
5. PROVIDE FIRE TREATED SOLID WOOD BLOCKING OR METAL BACKING PLATE AS REQUIRED FOR ALL WALL MOUNTED CABINETS, TOILET ACCESSORIES, EQUIPMENT, AND SIGNAGE.
6. PRIOR TO WATER CLOSET ROUGH-IN AND WALL LAYOUT FIELD VERIFY LOCATIONS OF JOIST, BEAMS AND OTHER STRUCTURAL ITEMS. DO NOT CUT, DRILL OR MODIFY ANY STRUCTURAL ELEMENTS IN ANY MANNER.
7. PATCH REPAIR ALL EXISTING CORRIDOR WALLS AS REQUIRED, TYPICAL.
8. ADJUST SIZE OR ROTATE NEW CHASES AS REQUIRED TO ENCLOSE NEW OR EXISTING PLUMBING, CONDUIT, HVAC, ETC WITHIN. CONTACT ARCHITECT FOR DIRECTION IF NEW CHASES INDICATED DIFFER FROM ACTUAL FIELD CONDITIONS, TYPICAL.
9. SEE INTERIOR ELEVATIONS FOR WATER CLOSET AND LAVATORY OFFSET DIMENSIONS FROM ADJACENT FINISHED WALLS.
10. SEE SPECIFICATIONS FOR SIGNAGE.
11. SEE 9/A6.1 FOR EXISTING/NEW WALL TRANSITIONS, TYPICAL.
12. INFILL WALL AT ALL OPENINGS CREATED BY REMOVALS. MATCH EXISTING WALL MATERIALS AND WALL THICKNESS. AT CLAY TILES WALLS INFILL OPENING WITH CMU.
13. PATCH AND REPAIR ALL WALLS, CEILING AND OTHER SURFACES TO LIKE NEW CONDITION AT FIRST FLOOR AND OTHER AREAS OTHER AREAS OF WORK FLOOR. MATCH EXISTING COLOR, FINISH AND TEXTURE.

DEMOLITION NOTES (FLOORPLAN/ RCP):

DRAWINGS BASED ON LIMITED FIELD VERIFICATION, NOT ALL REMOVALS ARE NOTED. REMOVE EXISTING WORK WHERE REQUIRED TO COMPLY WITH DESIGN INTENT.

1. REMOVE DOOR, FRAME AND ASSOCIATED HARDWARE.
2. REMOVE WALL, BRACING AND ANCHORS TO STRUCTURE ABOVE, SAW CUT CLAY TILE WALLS
3. REMOVE AND REPLACE PORTION OF CEILING AS REQUIRED TO ACCOMMODATE WORK. REMOVE AND REINSTALL LIGHT FIXTURES, SPEAKERS, ETC AS REQUIRED.
4. PROTECT EXISTING FLOORING TO REMAIN. REPLACE DAMAGED TO MATCH NEW.
5. REMOVE ALL FLOORING AND BASE, EXISTING TERRAZZO FLOORING TO REMAIN WHERE OCCURRING. SEE 8/A6.1 FOR REMOVAL OF TERRAZZO BASE.
6. REMOVE WALL COVERINGS AND FINISHES (INCLUDING TILE) ON ALL WALLS THAT REMAIN (NOT REFERENCED).
7. INFILL ALL EXISTING FLOOR PENETRATIONS, QUANTITY UNKNOWN (NOT REFERENCED). FOR PENETRATIONS UP TO 1 1/2" DIA. USE STIFF GROUT MIX SUITED FOR APPLICATIONS. FOR OPENINGS LARGER THAN 1 1/2" DIA. SEE 7/A6.1.
8. REMOVE ALL SIGNAGE AND SALVAGE FOR REUSE (NOT REFERENCED).
9. REMOVE EXISTING PROTECTIVE WALL COVERING PWC-1 AND HANDRAIL HR-1.
10. REMOVE CEILING, FRAMING, GRID, HANGER WIRES AND ANCHORS.
11. REMOVE GLAZING AND PORTION OF FRAME, SEE WINDOW TYPES FOR EXTENT. FIELD VERIFY EXISTING FRAME.
12. REMOVE EXISTING COAT HOOK. RETURN TO OWNER.
13. REMOVE ALL HANDRAIL AND WALL PROTECTION TO NEAREST TERMINATION IN AREAS OF WORK, SALVAGE HANDRAIL FOR REUSE (NOT REFERENCED).
14. EXISTING SOFFIT, FRAMING AND ANCHORS TO REMAIN AS COORDINATED WITH NEW WORK.
15. REMOVE SOFFIT, FRAMING AND ANCHORS.
16. REMOVE EXISTING SILL FOR NEW.
17. REMOVE CASEWORK.
18. REMOVE EXISTING PHOROPTER. COORDINATE WITH AND RETURN TO OWNER.
19. REMOVE EXISTING EXAM CHAIR. COORDINATE WITH AND RETURN TO OWNER.
20. REMOVE EXISTING PROJECTOR PLATE. COORDINATE WITH AND RETURN TO OWNER.
21. REMOVE EXISTING EYE GLASS HOLDER. COORDINATE WITH AND RETURN TO OWNER.
22. REMOVE EXISTING TOOL HOLDER. COORDINATE WITH AND RETURN TO OWNER.
23. REMOVE COUNTERTOP AND SUPPORTS.
24. REMOVE TOILET COMPARTMENT.
25. REMOVE EXISTING MIRROR. COORDINATE WITH AND RETURN TO OWNER.
26. REMOVE EXISTING PROJECTOR. COORDINATE WITH AND RETURN TO OWNER.
27. MARK, REMOVE AND SALVAGE ALL EXISTING WINDOW SHADES. REINSTALL. COORDINATE WITH OWNER.
28. PROVIDE OPENINGS IN WALLS AS REQUIRED TO ACCOMMODATE DUCTS, CONDUIT, PIPING, ETC, SEE DETAILS 1/A6.1 (NOT REFERENCED).
29. DISPOSE OF ALL HAND SANITIZERS AND SOAP DISPENSERS. SALVAGE ALL TOWEL DISPENSERS, WIRE RACKS AND SHARPS CONTAINERS. (NOT REFERENCED)

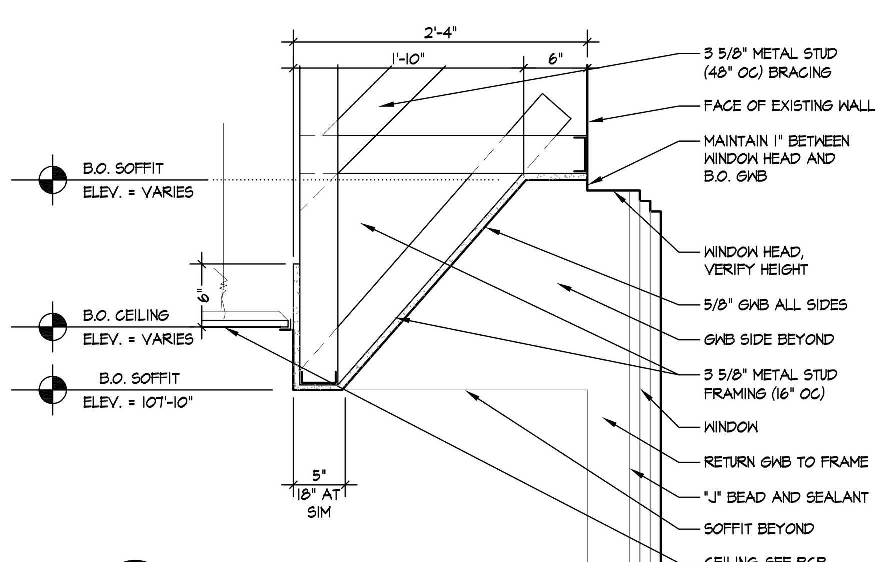

5 DETAIL
A2.1 SCALE: 1" = 1'-0"

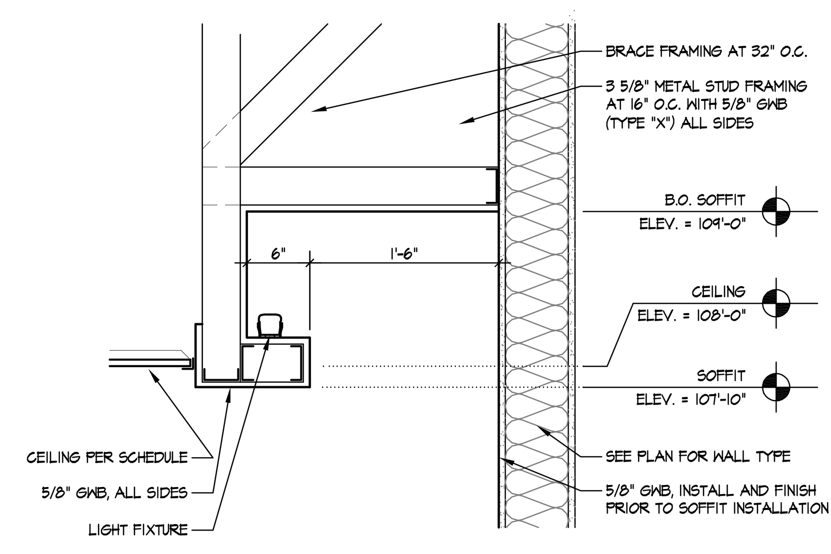

6 DETAIL
A2.1 SCALE: 1" = 1'-0"

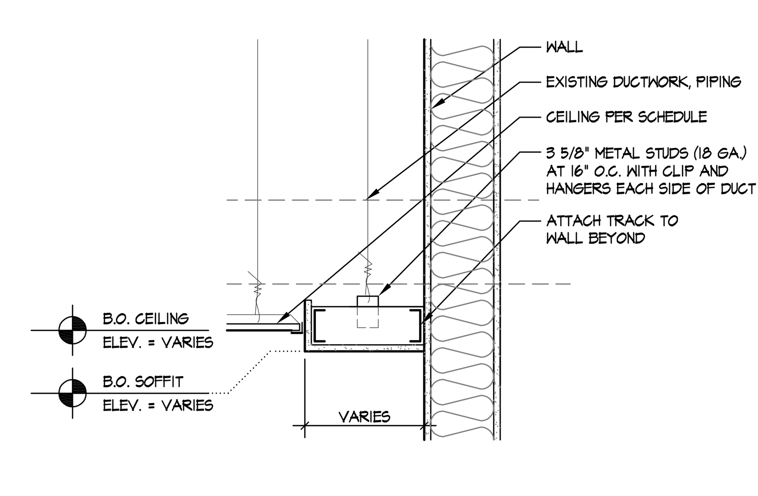

7 DETAIL
A2.1 SCALE: 1" = 1'-0"

LEGEND:

SYMBOLS MAY VARY SEE MECH/ELEC DRAWINGS

SUPPLY DIFFUSER
RETURN REGISTER
CEILING MOUNT LUMINAIRE
TROFFER
CONTROL JOINT FRY REGLET DRM-50-50 OR EQUAL, SEE DETAIL 11/A6.1 — CJ

REFLECTED CEILING GENERAL NOTES:

1. ALL DIMENSIONS TO FACE OF STUD OR CENTERLINE OF COLUMN UNLESS NOTED OTHERWISE.
2. BOTTOM OF GWB 2" LOWER THAN ADJACENT ACOUSTIC CEILING.
3. REINSTALL SALVAGED CEILING PANELS, REPLACE GRID AND DAMAGED PANELS, IF REQUIRED, MATCH EXISTING.
4. COORDINATE LOCATION OF LIGHT FIXTURES, DIFFUSERS, GRILLES, LIFTS AND OTHER CEILING MOUNTED WORK PRIOR TO INSTALLATION.
5. IF FIELD DIMENSIONS VARY FROM WHAT IS INDICATED ON THIS PLAN CONTACT ARCHITECT PRIOR TO PROCEEDING WITH WORK.

Revisions: | Date

© 2012 Calvin L. Hinz Architects P.C.

These plans are specifically designed for construction by Calvin L. Hinz Architects and are intended for no other purposes. Permission for use of this document in part or whole without written consent of Calvin L. Hinz Architects is prohibited.

IMPORTANT CONTRACTOR'S NOTE

1. ALL CONTRACTORS ARE RESPONSIBLE FOR REVIEWING ENTIRE SET OF DOCUMENTS TO DETERMINE THEIR FULL SCOPE OF WORK. CONTRACTOR SHALL NOT BE ALLOWED EXTRA COSTS DUE TO FAILURE TO REVIEW ENTIRE SET OF DOCUMENTS.
2. ANY USE OF THESE ELECTRONIC DRAWINGS OR SCALING OF THE PRINTED DOCUMENTS ARE DONE SO AT THE CONTRACTORS RISK.

ARCHITECT CALVIN L. HINZ A-1793 STATE OF NEBRASKA

ARCHITECT/ENGINEERS:

CLH Calvin L. Hinz ARCHITECTS P.C.
Calvin L. Hinz Architects, P.C.
3705 North 200th Street
Elkhorn, Nebraska 68022
Phone:402.291.6941 Fax: 402.291.9193

KRS ENGINEERING
11620 ARBOR STREET SUITE 100
OMAHA, NEBRASKA 68144
PHONE : 402 . 932 . 0100
FAX : 402 . 932 . 1001
www.krsengineering.com
KRS # KRSNO

COPYRIGHT 2011
This document and the information contained may not be reproduced without the express written permission of KRS Engineering, LLC. Unauthorized copying, disclosure or construction use are prohibited by the copyright law.

Drawing Title	DEMOLITION PLAN, FLOOR PLAN, DEMOLITION CEILING PLAN, REFLECTED CEILING PLAN, ROOM FINISH SCHEDULE, INTERIOR COLOR KEY, WALLTYPES, CEILING DETAILS AND NOTES
Approved: Project Director	KEVIN HUTSELL
	CONSTRUCTION DOCUMENT (CD-3) SUBMITTAL (100%) December 31, 2012
Project Title	RENOVATE 2ND FLOOR RESTROOMS GI NWIHCS
Location	VAMC Grand Island, NE
Date	DECEMBER 31, 2012
Checked	CH/ MK
Drawn	RB
Project Number	636-13-135
Building Number	ONE
Drawing Number	A2.1
	Dwg. 2 of 11

Office of Construction and Facilities Management
Department of Veterans Affairs

VA FORM 08-6231