FAN SCHEDULE

MARK	SERVES	TYPE	CFM	EXT. S.P.	FAN RPM	DRIVE	MAX SONES	CONTROL	MANUFACTURER & MODEL NO.	REMARKS
EF-3.1	TOILETS	INLINE CENTRIFUGAL	300	0.50"	1070	DIRECT	2.5	REMARKS	GREENHECK #CSP-A510	1, 2, 3, 4, 5
EF-3.2	TOILETS	INLINE CENTRIFUGAL	300	0.50"	1070	DIRECT	2.5	REMARKS	GREENHECK #CSP-A510	1, 2, 3, 4, 5

REMARKS:
1. SEE MECHANICAL/ELECTRICAL COORDINATION SCHEDULE ON SHEET E0.0 FOR ELECTRICAL DATA.
2. PROVIDE FAN MOUNTED SPEED CONTROL FOR FAN BALANCING.
3. SEE SEQUENCE OF OPERATIONS ON M2.1.
4. PROVIDE HOODED WALL CAP WITH INTEGRAL BACKDRAFT DAMPER AND BIRDSCREEN
5. COMPARABLE PRODUCTS MANUFACTURED BY COOK AND PENNBARRY MAY BE SUBMITTED.

REGISTER - GRILLE - DIFFUSER SCHEDULE

MARK	FUNCTION	TYPE	CFM RANGE	MAX N.C.	SIZE (INCHES)	BORDER OR FRAME	MATERIAL ALUM.	MATERIAL STEEL	FINISH	ACCESS.	MANUFACTURER & MODEL NO.	REMARKS
S-4	SUPPLY	DOUBLE DEFLECTION	0 - 660	25	12 x 12	SURFACE MOUNT	X		STND. WHITE	O.B.D.	KRUEGER SERIES # 5880H	1,2,3,4
E-1	EXHAUST	FIXED DEFL. 35° BLADE	0 - 500	25	12 x 12	SURFACE MOUNT	X		STND. WHITE	O.B.D.	KRUEGER SERIES # S580H	1,2,3,4

REMARKS:
1. PROVIDE SPECIFIC NOISE CRITERIA (NC) DATA FOR EACH LINE ITEM WITH SHOP DRAWINGS.
2. COORDINATE BORDER OR FRAME TYPE WITH CEILING TYPE.
3. COORDINATE FINISH WITH ARCHITECT.
4. COMPARABLE PRODUCTS MANUFACTURED BY PRICE AND METALAIRE MAY BE SUBMITTED.

FAN COIL UNIT SCHEDULE

MARK	TYPE	CFM (MAX)	E.S.P.	COOLING DATA CAPACITY (MBH) TOTAL	COOLING DATA CAPACITY (MBH) SENSIBLE	COOLING DATA GPM	COOLING DATA P.D. (FT)	HEATING DATA CAPACITY (MBH)	HEATING DATA GPM	HEATING DATA KW	HEATING DATA P.D. (FT)	MANUFACTURER & MODEL NO.	REMARKS
FC-2.14	THIN-LINE HORIZONTAL CONCEALED	275	0.20"	6.9	6.1	1.5	1.5	18.4	1.2	-	3.7	MCQUAY #FTSH2S04	1 THRU 12
FC-2.15	THIN-LINE HORIZONTAL CONCEALED	275	0.20"	6.9	6.1	1.5	1.5	18.4	1.2	-	3.7	MCQUAY #FTSH2S04	1 THRU 12

REMARKS:
1. SEE MECHANICAL/ELECTRICAL COORDINATION SCHEDULE ON SHEET E0.0 FOR ELECTRICAL DATA.
2. UNIT SHALL CONSIST OF A BASE CASING AND RETURN AIR PLENUM FABRICATED OF HEAVY GAUGE GALVANIZED STEEL WITH FOUR-SIDED 3/4-INCH DUCT COLLAR FOR EASE OF CONNECTING DISCHARGE DUCTWORK. RETURN AIR PLENUM SHALL HAVE A FILTER FRAME FOR 1-INCH PLEATED DISPOSABLE FILTERS AND 1-INCH RETURN AIR DUCT COLLAR. PLENUM SHALL BE FULLY INSULATED TO PREVENT UNIT SWEATING AND ATTENUATE FAN NOISE.
3. UNIT SHALL BE INSULATED WITH 1/2" MULTI-DENSITY GLASS FIBER ON THE CABINET BOTTOM PANEL AND DISCHARGE TRANSITION BETWEEN COIL AND DISCHARGE OPENING. HIDEAWAY TSH RETURN AIR PLENUM SHALL BE INSULATED WITH 1/2" MULTI-DENSITY GLASS FIBER.
4. COILS SHALL HAVE ALUMINUM FINS WITH COPPER TUBES MECHANICALLY EXPANDED FOR A PERMANENT BOND.
5. PROVIDE PRIMARY DRAIN PAN CONSTRUCTED OF 20-GAUGE GALVANIZED STEEL, INSULATED WITH 1/4" MULTI-DENSITY CLOSED CELL INSULATION. PROVIDE SECONDARY DRAIN PAN CONSTRUCTED OF GALVANIZED STEEL WITH CONDENSATE OVERFLOW SWITCH TO SHUT DOWN UNIT.
6. PROVIDE THREE-SPEED, PERMANENT SPLIT CAPACITOR, HIGH STATIC MOTOR.
7. COOLING CAPACITY BASED ON 77° F DB/63° F WB EAT, 44° F EWT.
8. PROVIDE LEFT-HAND OR RIGHT-HAND UNITS AND SIDE OR BOTTOM FILTER ACCESS. FIELD VERIFY BEST INSTALLATION ORIENTATION.
9. PROVIDE FACTORY PIPING PACKAGE PER DETAILS 2/M2.1 & 3/M2.1 WITH HEATING WATER COIL CONNECTIONS CAPPED FOR FUTURE USE.
10. MAXIMUM DEPTH OF FAN COIL UNIT SHALL BE 10.5 INCHES.
11. COMPARABLE PRODUCTS MANUFACTURED BY CARRIER AND I.E.C. MAY BE SUBMITTED.
12. HEATING CAPACITY BASED ON 180° F EWT.

SEQUENCE OF OPERATION

OCCUPIED MODE:
SUPPLY FAN: FAN SHALL RUN CONTINUOUSLY AND CYCLE BETWEEN LOW–MEDIUM–HIGH FAN SPEEDS. WHEN ROOM TEMPERATURE IS BETWEEN THE OCCUPIED HEATING AND COOLING SETPOINTS, THE FAN SHALL RUN ON LOW SPEED. THE FAN SHALL STAGE UP WHEN ROOM TEMPERATURE RISES ABOVE THE OCCUPIED COOLING SETPOINT OR DROPS BELOW THE OCCUPIED HEATING SETPOINT.

COOLING: WHEN ROOM TEMPERATURE IS BELOW THE OCCUPIED COOLING SETPOINT, THE COOLING VALVE SHALL BE CLOSED. WHEN ROOM TEMPERATURE RISES ABOVE THE OCCUPIED COOLING SETPOINT, THE COOLING VALVE SHALL MODULATE OPEN.

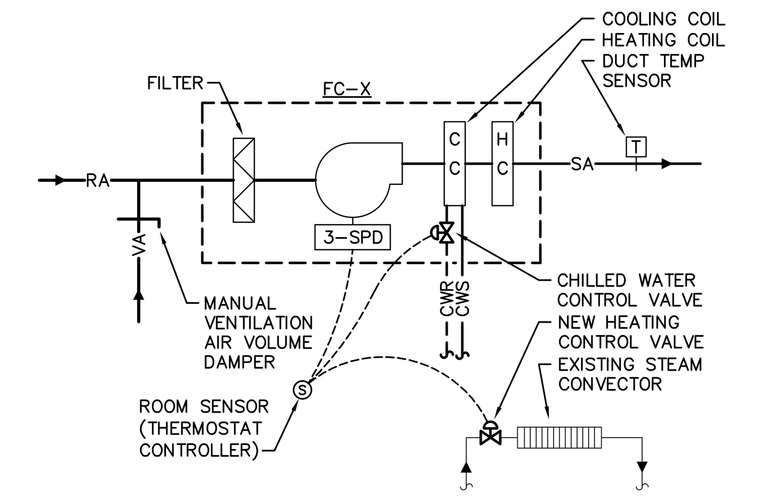

HEATING: WHEN ROOM TEMPERATURE IS ABOVE THE OCCUPIED HEATING SETPOINT, THE HEATING VALVE SHALL BE CLOSED. WHEN ROOM TEMPERATURE DROPS BELOW THE OCCUPIED HEATING SETPOINT, THE HEATING VALVE SHALL MODULATE OPEN.

UNOCCUPIED MODE:
SUPPLY FAN: WHEN ROOM TEMPERATURE IS BETWEEN THE UNOCCUPIED HEATING AND COOLING SETPOINTS, THE FAN SHALL CYCLE OFF. THE FAN SHALL STAGE UP WHEN ROOM TEMPERATURE RISES ABOVE THE UNOCCUPIED COOLING SETPOINT OR DROPS BELOW THE HEATING SETPOINT.
COOLING: WHEN ROOM TEMPERATURE IS BELOW THE UNOCCUPIED COOLING SETPOINT, THE COOLING VALVE SHALL BE CLOSED. WHEN ROOM TEMPERATURE RISES ABOVE THE UNOCCUPIED COOLING SETPOINT, THE COOLING VALVE SHALL MODULATE OPEN.
HEATING: WHEN ROOM TEMPERATURE IS ABOVE THE UNOCCUPIED HEATING SETPOINT, THE HEATING VALVE SHALL BE CLOSED. WHEN ROOM TEMPERATURE DROPS BELOW THE UNOCCUPIED HEATING SETPOINT, THE HEATING VALVE SHALL MODULATE OPEN.

NOTE: PROVIDE SIMILAR CONTROL SEQUENCE FOR UNITS WITH ELECTRIC HEAT

FAN COIL UNIT
NOT TO SCALE

SEQUENCE OF OPERATION

OCCUPIED MODE: FAN SHALL RUN CONTINUOUSLY.

UNOCCUPIED MODE: FAN SHALL CYCLE ON FOR 10 MINUTES EVERY HOUR.

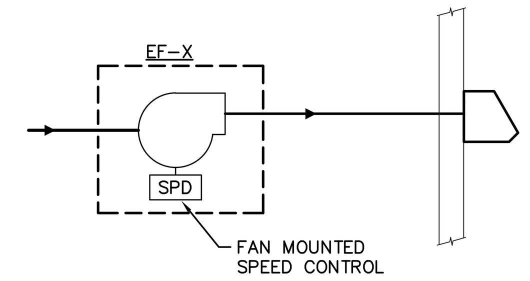

EXHAUST FAN
NOT TO SCALE

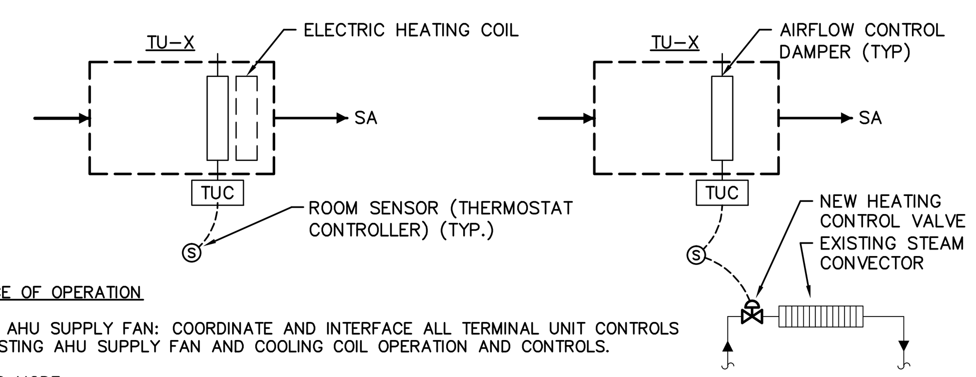

SEQUENCE OF OPERATION

EXISTING AHU SUPPLY FAN: COORDINATE AND INTERFACE ALL TERMINAL UNIT CONTROLS WITH EXISTING AHU SUPPLY FAN AND COOLING COIL OPERATION AND CONTROLS.

OCCUPIED MODE:
COOLING: WHEN ROOM TEMPERATURE RISES ABOVE THE OCCUPIED COOLING SETPOINT, THE TERMINAL UNIT CONTROLLER (TUC) SHALL POSITION THE AIRFLOW CONTROL DAMPER AS REQUIRED TO MAINTAIN THE OCCUPIED COOLING SETPOINT. WHEN ROOM TEMPERATURE IS BELOW THE OCCUPIED COOLING SETPOINT, THE TUC SHALL POSITION THE AIRFLOW CONTROL DAMPER AT THE MINIMUM POSITION.
HEATING (ELECTRIC HEATING COIL): WHEN ROOM TEMPERATURE FALLS BELOW THE OCCUPIED HEATING SETPOINT, THE ELECTRIC HEATING COIL SHALL STAGE ON AND THE TUC SHALL MODULATE THE AIRFLOW CONTROL DAMPER BETWEEN THE MINIMUM POSITION AND THE MAXIMUM HEATING AIRFLOW AS REQUIRED TO MAINTAIN THE OCCUPIED HEATING SETPOINT. WHEN ROOM TEMPERATURE IS ABOVE THE OCCUPIED HEATING SETPOINT, THE ELECTRIC HEATING COIL SHALL STAGE OFF AND THE TUC SHALL POSITION THE AIRFLOW CONTROL DAMPER AT THE MINIMUM POSITION.
HEATING (STEAM CONVECTOR): WHEN ROOM TEMPERATURE FALLS BELOW THE OCCUPIED HEATING SETPOINT, THE HEATING VALVE SHALL MODULATE OPEN AND TUC SHALL POSITION THE AIRFLOW CONTROL DAMPER AT THE MINIMUM POSITION. WHEN ROOM TEMPERATURE IS ABOVE THE OCCUPIED HEATING SETPOINT, THE HEATING VALVE SHALL CLOSE AND THE TUC SHALL POSITION THE AIRFLOW CONTROL DAMPER AT THE MINIMUM POSITION.

UNOCCUPIED MODE:
COOLING: WHEN ROOM TEMPERATURE RISES ABOVE THE UNOCCUPIED COOLING SETPOINT, THE TUC SHALL POSITION THE AIRFLOW CONTROL DAMPER AS REQUIRED TO MAINTAIN THE UNOCCUPIED COOLING SETPOINT.
HEATING (ELECTRIC HEATING COIL): WHEN ROOM TEMPERATURE FALLS BELOW THE UNOCCUPIED HEATING SETPOINT, THE ELECTRIC HEATING COIL SHALL STAGE ON TO MAINTAIN THE UNOCCUPIED HEATING SETPOINT AND THE TUC SHALL POSITION THE AIRFLOW CONTROL DAMPER AT THE MINIMUM POSITION.
HEATING (STEAM CONVECTOR): WHEN ROOM TEMPERATURE FALLS BELOW THE UNOCCUPIED HEATING SETPOINT, THE HEATING VALVE SHALL MODULATE OPEN TO MAINTAIN THE UNOCCUPIED HEATING SETPOINT AND THE TUC SHALL POSITION THE AIRFLOW CONTROL DAMPER AT THE MINIMUM POSITION.

GENERAL TEMPERATURE CONTROL NOTE:
PROVIDE NEW JOHNSON CONTROLS NETWORK CONTROL MODULE (NCM) FOR CONTROL OF ALL NEW MECHANICAL EQUIPMENT. COORDINATE EXACT LOCATION OF NCM WITH CONTRACTOR.

VAV TERMINAL UNIT
NOT TO SCALE

7 CONTROL DIAGRAMS
NOT TO SCALE

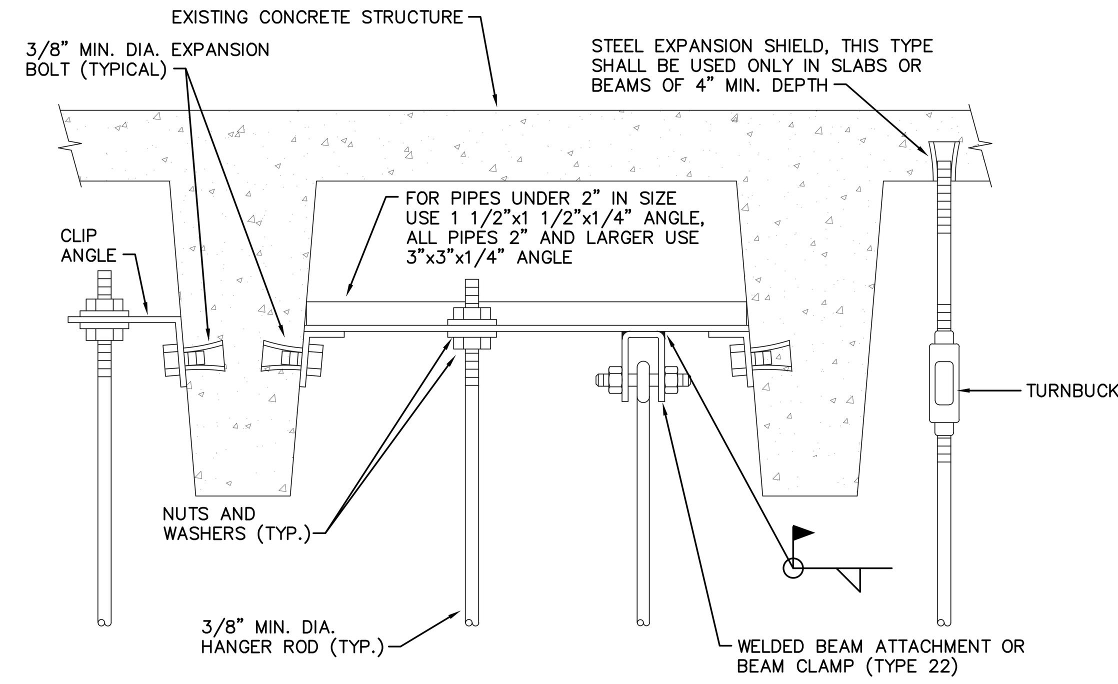

4 HANGER ROD SUPPORT DETAIL
NOT TO SCALE

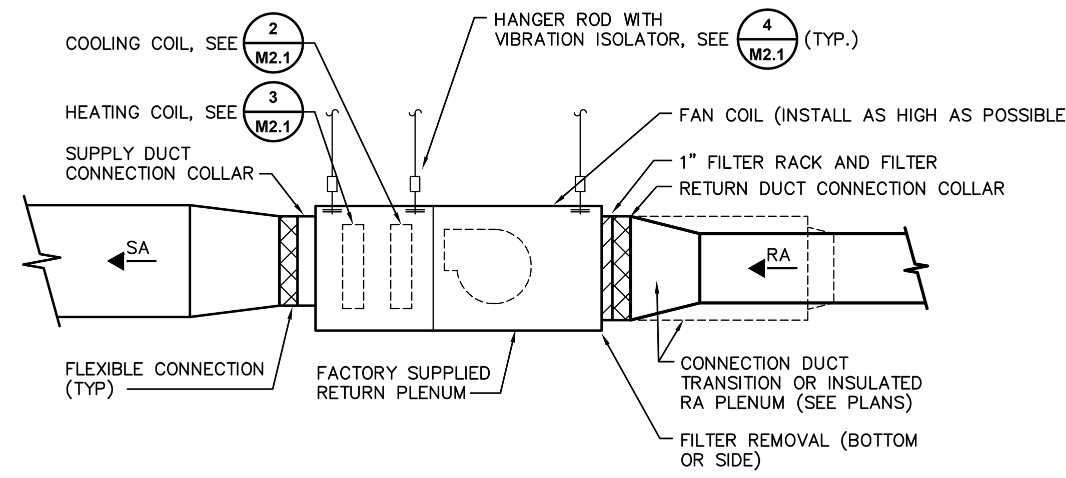

1 FAN COIL DUCTWORK DETAIL
NOT TO SCALE

KEYNOTES

1. LOW PRESSURE DUCTWORK SHALL INCLUDE SUPPLY AIR, VENTILATION AIR AND RETURN AIR DUCTWORK WITH PRESSURE CLASS OF 2–INCH WG OR LESS AND EXHAUST AIR DUCTWORK WITH PRESSURE CLASS OF 3–INCH WG OR LESS.
2. ALL RECTANGULAR ELBOWS SHALL BE RADIUS TYPE EXCEPT WHERE SPACE RESTRICTIONS NECESSITATE USING 90 DEGREE SQUARE THROAT ELBOW WITH TURNING VANES. ELBOW RADIUS SHALL BE PER SMACNA RECOMMENDATIONS.
3. VOLUME DAMPERS SHALL BE PROVIDED ON ALL LOW PRESSURE DUCT BRANCHES AND AS INDICATED ON PLANS AND AS REQUIRED BY SPECIFICATIONS.
4. DUCTWORK TRANSITIONS:
   - A. CONCENTRIC, CONVERGING: 60 DEGREE ANGLE (MAX.)
   - B. CONCENTRIC, DIVERGING: 45 DEGREE ANGLE (MAX.)
   - C. ECCENTRIC, CONVERGING OR DIVERGING: 30 DEGREE ANGLE (MAX.)
5. RECTANGULAR TO RECTANGULAR BRANCH DUCT TAKE–OFF FITTING SHALL BE FACTORY FABRICATED 45 DEGREE TAKE–OFF WITH SEALED JOINTS AND SEAMS OR PITTSBURGH LOCK LONGITUDINAL SEAMS.
6. RECTANGULAR TO ROUND BRANCH DUCT TAKE–OFF FITTING SHALL BE FACTORY FABRICATED STRAIGHT–SIDED HIGH EFFICIENCY TAKE–OFF (HETO OR EQUAL) WITH SEALED JOINTS AND SEAMS AND GASKETED FLANGE.
7. VOLUME DAMPERS ON DUCT SYSTEMS WITH INSULATION ON THE EXTERIOR OF THE DUCT SHALL BE PROVIDED WITH STAND–OFF BRACKET EQUAL TO OR GREATER THAN INSULATION THICKNESS.

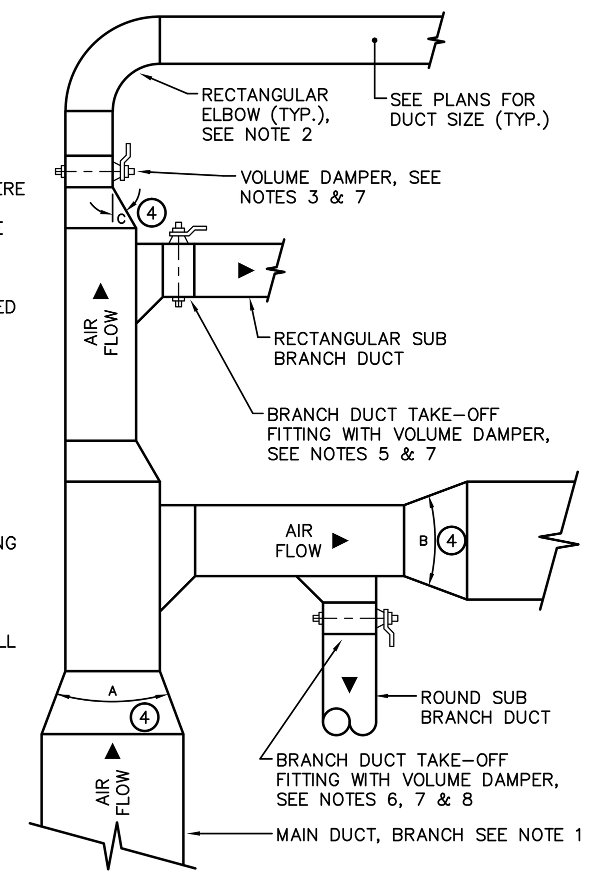

5 TYPICAL LOW PRESSURE DUCT DETAIL
NOT TO SCALE

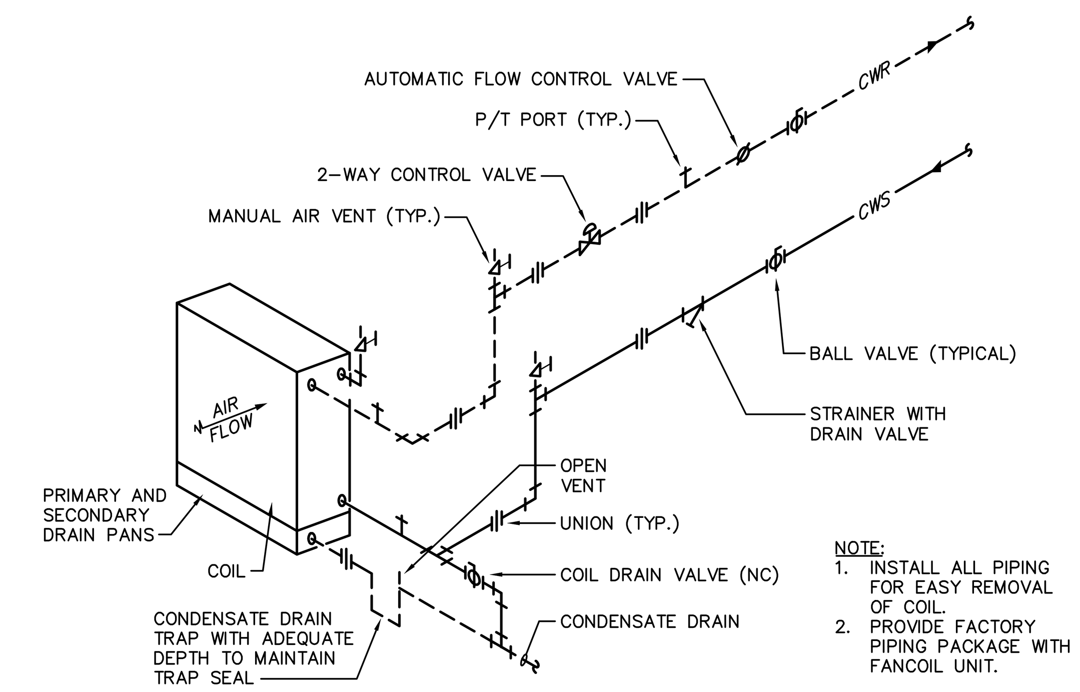

NOTE:
1. INSTALL ALL PIPING FOR EASY REMOVAL OF COIL.
2. PROVIDE FACTORY PIPING PACKAGE WITH FANCOIL UNIT.

2 CHILLED WATER COOLING COIL PIPING DETAIL (2-WAY VALVE)
NOT TO SCALE

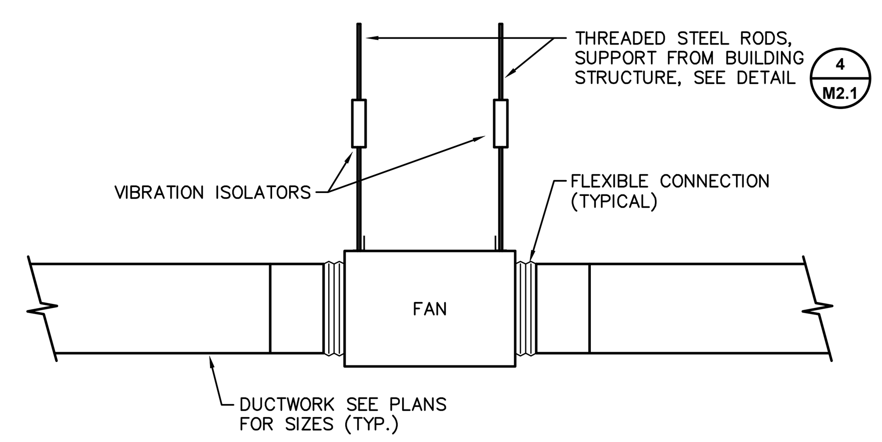

6 INLINE FAN DETAIL
NOT TO SCALE

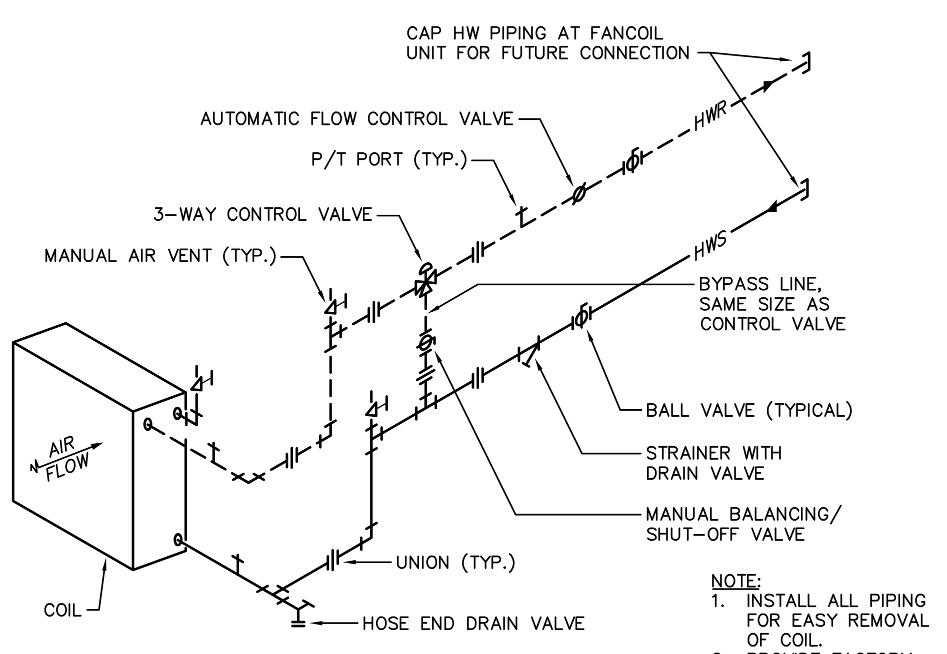

NOTE:
1. INSTALL ALL PIPING FOR EASY REMOVAL OF COIL.
2. PROVIDE FACTORY PIPING PACKAGE WITH FANCOIL UNIT.

3 HOT WATER HEATING COIL PIPING DETAIL (3-WAY VALVE)
NOT TO SCALE

Revisions: | Date

© 2000 Calvin L. Hinz Architects P.C.

These plans are specifically designed for construction by Calvin L. Hinz Architects and are intended for no other purposes. Permission for use of this document in part or whole without written consent of Calvin L. Hinz Architects is prohibited.

IMPORTANT CONTRACTOR'S NOTE
1. ALL CONTRACTORS ARE RESPONSIBLE FOR REVIEWING ENTIRE SET OF DOCUMENTS TO DETERMINE THEIR FULL SCOPE OF WORK. CONTRACTOR SHALL NOT BE ALLOWED EXTRA COSTS DUE TO FAILURE TO REVIEW ENTIRE SET OF DOCUMENTS.
2. ANY USE OF THESE ELECTRONIC DRAWINGS OR SCALING OF THE PRINTED DOCUMENTS ARE DONE SO AT THE CONTRACTORS RISK.

PROFESSIONAL MECHANICAL ENGINEER — MICHAEL K. LARSON — E-7966 — STATE OF NEBRASKA

ARCHITECT/ENGINEERS:

CLH Calvin L. Hinz ARCHITECTS P.C.
Calvin L. Hinz Architects, P.C.
3705 North 200th Street
Elkhorn, Nebraska 68022
Phone:402.291.6941 Fax: 402.291.9193

KRS engineering LLC
11620 ARBOR STREET SUITE 100
OMAHA, NEBRASKA 68144
PHONE : 402 . 932 . 0100
FAX: 402 . 932 . 1001
www.krsengineering.com
KRS # 121013-A

COPYRIGHT 2012
This document and the information contained may not be reproduced without the express written permission of KRS Engineering, LLC. Unauthorized copying, disclosure or construction use are prohibited by the copyright law.

Drawing Title	Project Title	Project Number
MECHANICAL SCHEDULES AND DETAILS	RENOVATE 2ND FLOOR RESTROOMS GI NWIHCS	636-13-135
	Location: VAMC Grand Island, NE	Building Number: ONE
Approved: Project Director: KEVIN HUTSELL	Date: DECEMBER 31, 2012	Drawing Number: M2.1
CONSTRUCTION DOCUMENT (CD-3) SUBMITTAL 100% DECEMBER 31, 2012	Checked: MKL / Drawn: SFP	Dwg. 9 of 11

Office of Construction and Facilities Management
Department of Veterans Affairs

VA FORM 08–6231

P:\2012\121013-A\CAD\Mechanical\121013-A_M2.1.dwg 12-27-12 09:54:56 AM bjh