PLUMBING FIXTURE SCHEDULE

FD-1 — FLOOR DRAIN:

DRAIN
DUCO CAST IRON FLOOR DRAIN, TWO-PIECE BODY WITH DOUBLE DRAINAGE FLANGE, INVERTABLE NONPUNCTURING FLASHING COLLAR, SEEPAGE OPENINGS, BOTTOM OUTLET, AND ADJUSTABLE NICKEL BRONZE ROUND STRAINER.
J.R. SMITH 2005L-A-NB OR APPROVED EQUAL.

MIN. CONN. SIZE			
W	V	HW	CW
–	–	–	–

DRAIN

REMARKS

1. SEE PLANS FOR SIZE.
2. PROVIDE WITH 9910 SMITH+GARD ROUND CLEANOUT COVER.
3. PROVIDE WITH "SURESEAL" IN-LINE TRAP SEALER OR APPROVED EQUAL.

EWC-1.1 — ELECTRIC WATER COOLER:

FIXTURE
PUSH BAR, NO LEAD, BARRIER-FREE ACCESS (ADA COMPLIANT) BI-LEVEL WATER COOLER. BUBBLER, GALVANIZED STEEL CHASSIS SUPPORTS FOUNTAIN TOP AND ALL WORKING MECHANISMS, FOUNTAIN TOP IS SINGLE PIECE STAINLESS STEEL, INTEGRAL DRAIN GRID, PRODUCES UP TO 8.0 GPH OF 50° F WATER BASED ON 80° F INLET WATER AND 90° F AMBIENT, ELECTRICAL: 370 WATTS, 4.0 FLA.
COLOR: COLOR TO BE STAINLESS STEEL. COORDINATE COLOR WITH ARCHITECT.
ELKAY EZSTL8C OR EZSTLR8C OR APPROVED EQUAL.

MIN. CONN. SIZE			
W	V	HW	CW
1 1/2"	1 1/2"	–	1/2"

COOLER

REMARKS

1. SHALL COMPLY WITH A.D.A. REQUIREMENTS.
2. PRIOR TO ORDERING COORDINATE BI-LEVEL HEIGHT ORIENTATIONS WITH ARCHITECTURAL PLANS.

UR-1 — URINAL:

COMPLETE HIGH EFFICIENCY URINAL (HEU) SYSTEM WITH QUIET, EXPOSED, MANUALLY OPERATED, CHROME PLATED URINAL FLUSHOMETER (0.5 GPF) FOR EITHER LEFT OR RIGHT HAND SUPPLY AND VITREOUS CHINA WALL HUNG URINAL WITH THE FOLLOWING FEATURES:

URINAL
WALL HUNG VITREOUS CHINA, WASHDOWN FLUSHING ACTION, 3/4" I.P.S. TOP SPUD INLET, 2" NPT OUTLET FLANGE, ALL MOUNTING HARDWARE INCLUDED, INTEGRAL FLUSHING RIM.

FLUSHOMETER
QUIET, EXPOSED, DIAPHRAGM TYPE, CHROME PLATED URINAL FLUSHOMETER WITH THE FOLLOWING FEATURES: RUBBER DIAPHRAGM WITH DUAL FILTERED FIXED BYPASS, ADA COMPLIANT METAL OSCILLATING NON-HOLD-OPEN HANDLE, 3/4" I.P.S. SCREWDRIVER BAK-CHEK® ANGLE STOP, VANDAL RESISTANT STOP CAP, ADJUSTABLE TAILPIECE, HIGH BACK PRESSURE VACUUM BREAKER, SPUD COUPLING AND FLANGE FOR 3/4" TOP SPUD, SWEAT SOLDER ADAPTER W/COVER TUBE AND CAST WALL FLANGE W/SET SCREW, CHLORAMINE RESISTANT.

SLOAN WEUS-1005.1001-0.5 OR APPROVED EQUAL.

CARRIER
FOR STUD WALL/PLUMBING CHASE CONSTRUCTION:
FLOOR-MOUNTED SINGLE URINAL CARRIER WITH HANGER PLATE, BEARING PLATE, ADJUSTABLE SUPPORTING RODS, STRUCTURAL UPRIGHTS, WELDED FEET, AND SUPPLY PIPE SUPPORT. ALL PORTIONS OF CARRIER SHALL BE CONCEALED WITHIN WALL/PIPE CHASE CONSTRUCTION.
SEE SPECIFICATIONS FOR APPROVED MANUFACTURERS.
VERIFY WALL/CHASE THICKNESS PRIOR TO ORDERING CARRIER(S).

FOR BLOCK WALL CONSTRUCTION:
WALL-MOUNTED SINGLE URINAL CARRIER WITH HANGER PLATES AND ADJUSTABLE SUPPORTING RODS.
SEE SPECIFICATIONS FOR APPROVED MANUFACTURERS.
VERIFY BLOCK WALL THICKNESS PRIOR TO ORDERING CARRIER(S).

MIN. CONN. SIZE			
W	V	HW	CW
2"	2"	–	3/4"

FIXTURE

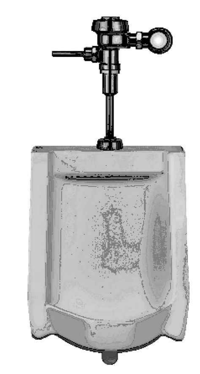

REMARKS

1. SHALL COMPLY WITH A.D.A. REQUIREMENTS.

GENERAL NOTES FOR PLUMBING FIXTURE SCHEDULE(S)

PLUMBING FIXTURES SHALL BE OF ONE OF THE MANUFACTURERS INDICATED AND IN ACCORDANCE WITH THE INFORMATION AND MANUFACTURER'S CATALOG NUMBERS INDICATED. IF MANUFACTURER'S CATALOG NUMBERS HAVE BEEN UPDATED OR DELETED, FIXTURES SHALL BE OF SIMILAR CONFIGURATION AND OF SIMILAR OR BETTER QUALITY THAN WHAT IS SPECIFIED.

VERIFY THE MOUNTING HEIGHT OF THE PLUMBING FIXTURES PRIOR TO ORDERING THE FIXTURES. MOUNTING HEIGHTS SHALL BE AS INDICATED ON ARCHITECTURAL DRAWINGS/PLUMBING FIXTURE SCHEDULES AND COMPLY WITH ADA REQUIREMENTS.

VERIFY COLOR OF FIXTURES WITH ARCHITECT PRIOR TO ORDERING FIXTURES.

COUNTER TOP SINKS: CONTRACTOR SHALL COORDINATE SIZE OF CABINET(S) AND SINK(S) PRIOR TO ORDERING FIXTURE(S).

ALL FIXTURE STOPS SHALL BE LOOSE KEY.

ADA WATER CLOSETS: FLUSH CONTROLS SHALL BE MOUNTED ON WIDE SIDE OF WATER CLOSET STALL AND AT A HEIGHT THAT COMPLIES WITH ADA GUIDELINES.

L-1 — LAVATORY:

FIXTURE
BY OTHERS.

TRIM
HEAVY DUTY CAST BRASS LAVATORY CENTERSET FAUCET ON 4" CENTERS WITH TWO HANDLES. POLISHED CHROME PLATED FINISH WITH POLISHED UNDERSPOUT AND METAL HOLD-DOWN PACKAGE. VANDAL RESISTANT LAMINAR FLOW OUTLET (1.5 GPM) WITH ANTIMICROBIAL BY AGION. 6" WRISTBLADE HANDLES-ADA COMPLIANT-SANITARY HOODS-METAL-COLOR INDEXED-VANDAL RESISTANT SCREWS. LESS POP-UP HOLE.
DELTA COMMERCIAL CER-TECK MODEL 21C125 OR APPROVED EQUAL.

SOLID BRASS STOPS WITH ALL BRASS STEMS AND CHLORAMINE-CHLORINE RESISTANT WASHERS AND WATER HAMMER ARRESTORS. CHLORAMINE-CHLORINE RESISTANT BRAIDED STAINLESS STEEL OR POLYMER FLEXIBLE CONNECTORS. CAST BRASS SOLID TOP OPEN GRID P.O. PLUG WITH 6" 17 GAUGE TAILPIECE WITH CAST BRASS LOCKNUT. HEAVY CAST BRASS ADJUSTABLE P-TRAP WITH 17 GA TUBULAR WALL BEND AND BRASS SLIP NUTS. (ALL BRASS MATERIALS SHALL BE CHROME PLATED)

PROVIDE TRUEBRO "LAV GUARD2" MODEL #102 E-Z OR APPROVED EQUAL.

MIN. CONN. SIZE			
W	V	HW	CW
1 1/2"	1 1/2"	1/2"	1/2"

FIXTURE

BY OTHERS

FAUCET

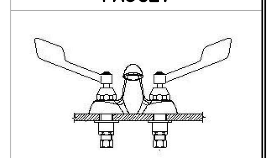

REMARKS

1. SHALL COMPLY WITH A.D.A. REQUIREMENTS.

WC-2 — WATER CLOSET:

COMPLETE ADA COMPLIANT HIGH EFFICIENCY TOILET (HET) SYSTEM WITH QUIET, EXPOSED, CHROME PLATED CLOSET FLUSHOMETER (1.28 GPF/4.8 LPF) FOR EITHER LEFT OR RIGHT HAND SUPPLY AND VITREOUS CHINA FLOOR SET WATER CLOSET WITH THE FOLLOWING FEATURES:

WATER CLOSET
ADA COMPLIANT FLOOR MOUNTED VITREOUS CHINA ELONGATED BOWL WITH SIPHON JET FLUSH ACTION, 1-1/2" I.P.S. TOP SPUD INLET, 2" FULLY GLAZED TRAPWAY DIAMETER, INTEGRAL FLUSHING RIM, WATER AREA (9-1/2" X 8-1/4"). CLOSET BOLTS AND CAPS INCLUDED.

FLUSHOMETER
SYNTHETIC RUBBER DIAPHRAGM WITH DUAL FILTERED FIXED BY-PASS, ADA COMPLIANT METAL OSCILLATING NON-HOLD-OPEN HANDLE, 1" I.P.S. SCREWDRIVER BAK-CHEK ANGLE STOP, FREE SPINNING VANDAL RESISTANT STOP CAP, HIGH BACK PRESSURE VACUUM BREAKER FLUSH CONNECTION WITH ONE PIECE BOTTOM HEX COUPLING NUT, SPUD COUPLING, AND FLANGE, SWEAT SOLDER ADAPTER WITH COVER TUBE AND CAST WALL FLANGE WITH SET SCREW, FIXED METERING BYPASS AND NO EXTERNAL VOLUME ADJUSTMENT TO ENSURE WATER CONSERVATION. DIAPHRAGM, STOP SEAT AND VACUUM BREAKER TO BE MOLDED FROM A RUBBER COMPOUND FOR CHLORAMINE RESISTANCE.

SLOAN WETS 2020.1001-1.28 OR APPROVED EQUALS.

COMMERCIAL WEIGHT SOLID PLASTIC OPEN FRONT LESS COVER FOR ELONGATED BOWL. LARGE INTEGRAL BUMPER SHALL BE COLOR-MATCHED MOLDED PLASTIC. HINGES TO FEATURE EXTERNAL CHECK AND INTERNAL SELF-SUSTAINING MECHANISMS IN BOTH HINGES. COLOR SHALL BE WHITE.
CHURCH MODEL #295SSC OR APPROVED EQUAL.

MIN. CONN. SIZE			
W	V	HW	CW
4"	2"	–	1"

FIXTURE

REMARKS

1. SHALL COMPLY WITH A.D.A. REQUIREMENTS.

WC-3 — WATER CLOSET:

COMPLETE HIGH EFFICIENCY TOILET (HET) SYSTEM WITH QUIET, EXPOSED, CHROME PLATED CLOSET FLUSHOMETER (1.28 GPF/4.8 LPF) FOR EITHER LEFT OR RIGHT HAND SUPPLY AND VITREOUS CHINA FLOOR SET WATER CLOSET WITH THE FOLLOWING FEATURES:

WATER CLOSET
FLOOR MOUNTED VITREOUS CHINA ELONGATED BOWL WITH SIPHON JET FLUSH ACTION, 1-1/2" I.P.S. TOP SPUD INLET, 2" FULLY GLAZED TRAPWAY DIAMETER, INTEGRAL FLUSHING RIM, WATER AREA (9-1/2" X 8-1/4"). CLOSET BOLTS AND CAPS INCLUDED.

FLUSHOMETER
SYNTHETIC RUBBER DIAPHRAGM WITH DUAL FILTERED FIXED BY-PASS, ADA COMPLIANT METAL OSCILLATING NON-HOLD-OPEN HANDLE, 1" I.P.S. SCREWDRIVER BAK-CHEK ANGLE STOP, FREE SPINNING VANDAL RESISTANT STOP CAP, HIGH BACK PRESSURE VACUUM BREAKER FLUSH CONNECTION WITH ONE PIECE BOTTOM HEX COUPLING NUT, SPUD COUPLING, AND FLANGE, SWEAT SOLDER ADAPTER WITH COVER TUBE AND CAST WALL FLANGE WITH SET SCREW, FIXED METERING BYPASS AND NO EXTERNAL VOLUME ADJUSTMENT TO ENSURE WATER CONSERVATION. DIAPHRAGM, STOP SEAT AND VACUUM BREAKER TO BE MOLDED FROM A RUBBER COMPOUND FOR CHLORAMINE RESISTANCE.

SLOAN WETS 2000.1001-1.28 OR APPROVED EQUALS.

COMMERCIAL WEIGHT SOLID PLASTIC OPEN FRONT LESS COVER FOR ELONGATED BOWL. LARGE INTEGRAL BUMPER SHALL BE COLOR-MATCHED MOLDED PLASTIC. HINGES TO FEATURE EXTERNAL CHECK AND INTERNAL SELF-SUSTAINING MECHANISMS IN BOTH HINGES. COLOR SHALL BE WHITE.
CHURCH MODEL #295SSC OR APPROVED EQUAL.

MIN. CONN. SIZE			
W	V	HW	CW
4"	2"	–	1"

FIXTURE

REMARKS

1. NONE.

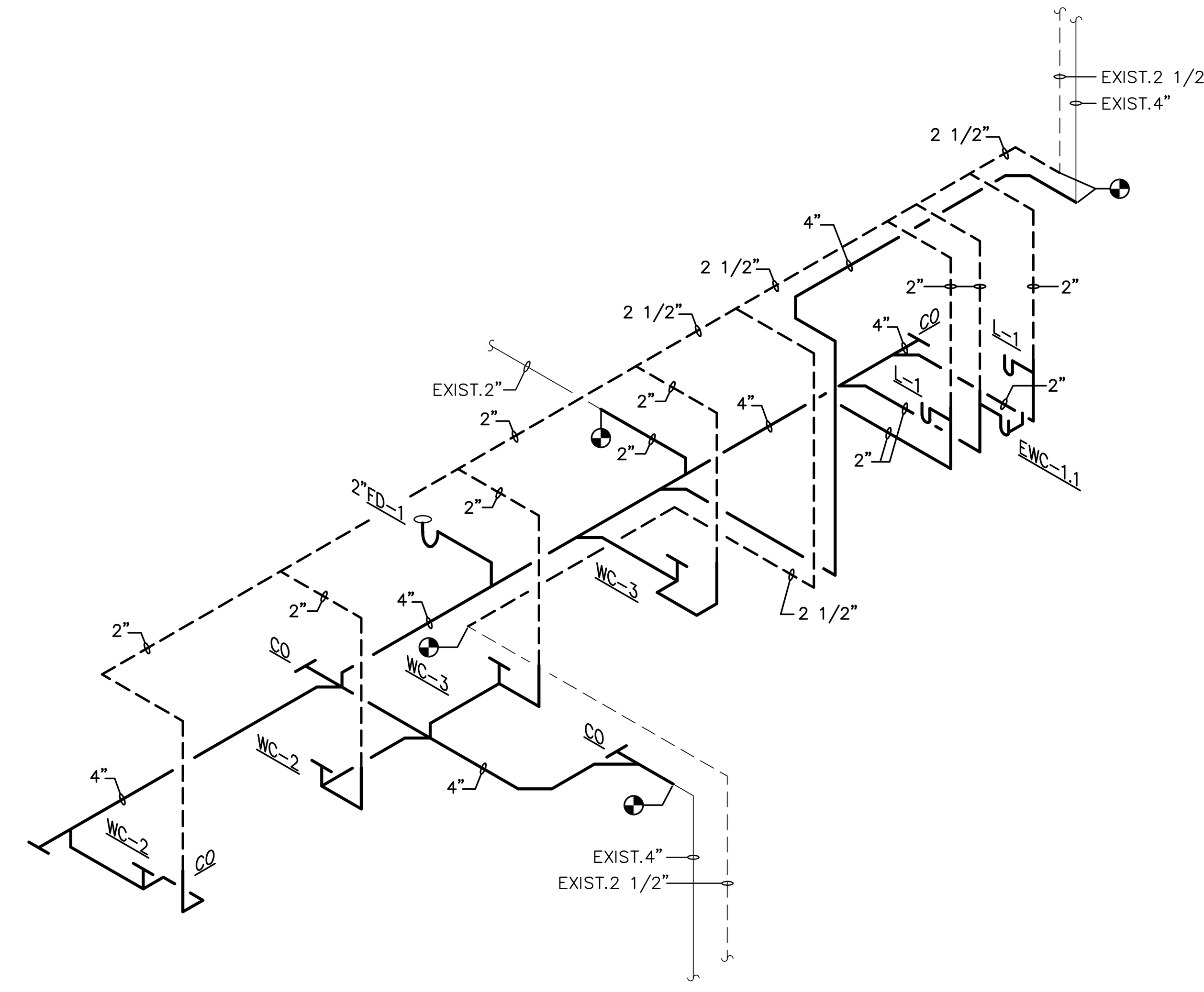

3 — **WASTE & VENT RISER DIAGRAM**
NOT TO SCALE

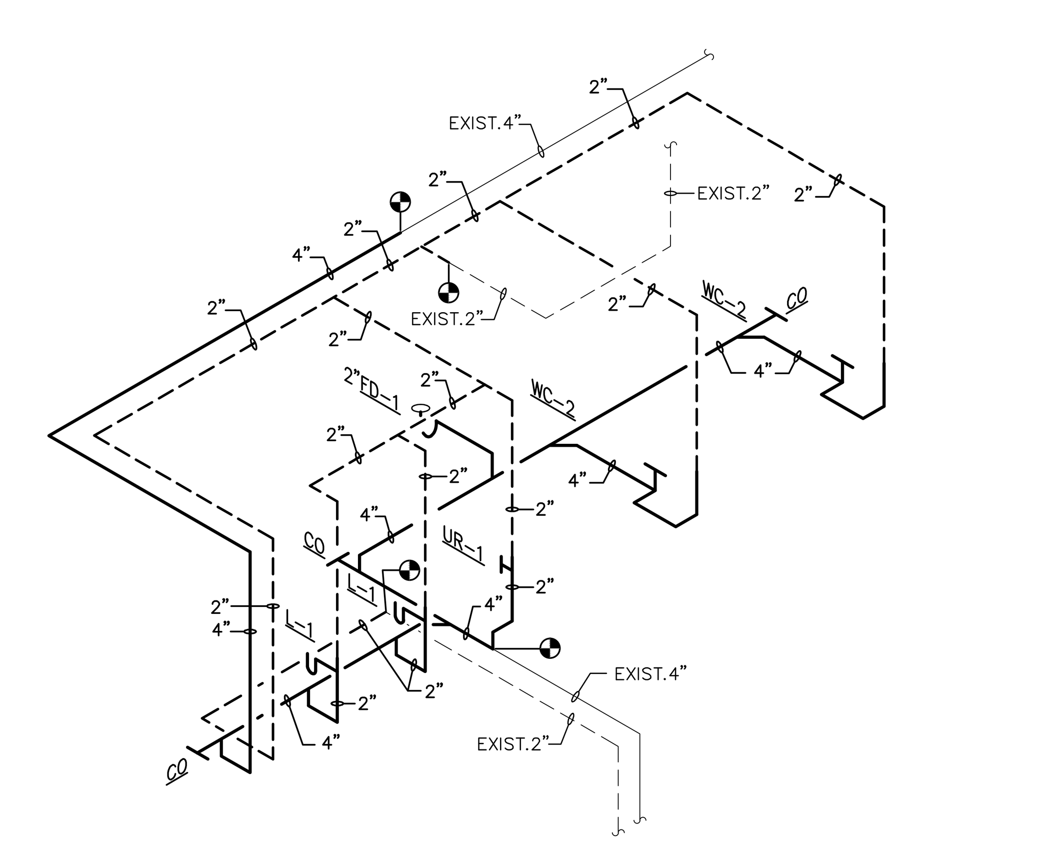

1 — **WASTE & VENT RISER DIAGRAM**
NOT TO SCALE

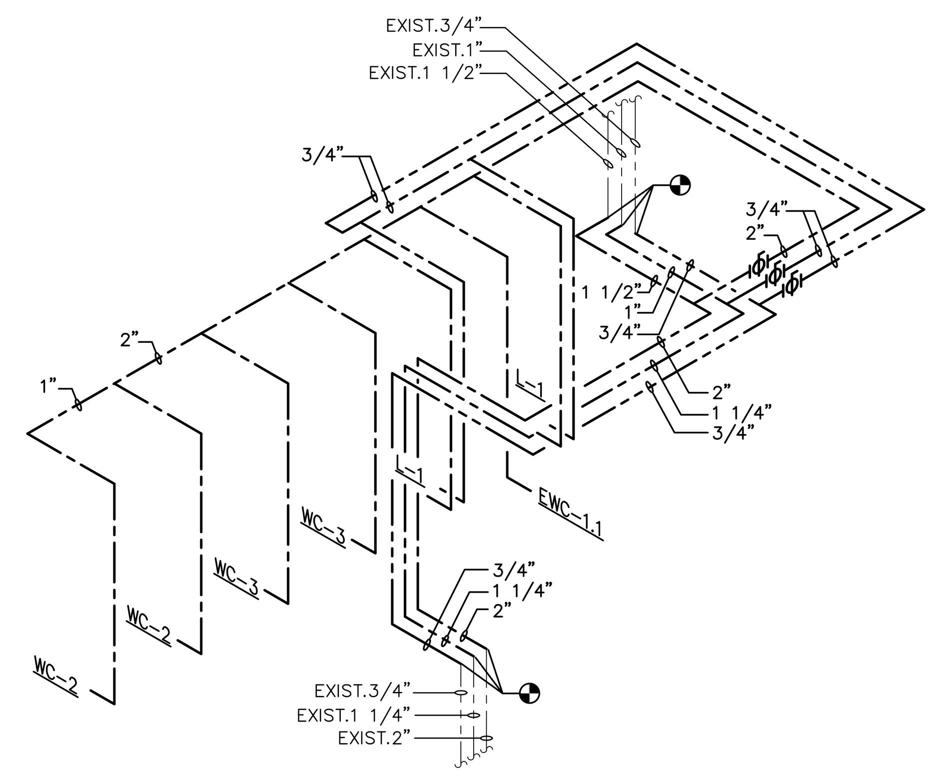

4 — **DOMESTIC WATER RISER DIAGRAM**
NOT TO SCALE

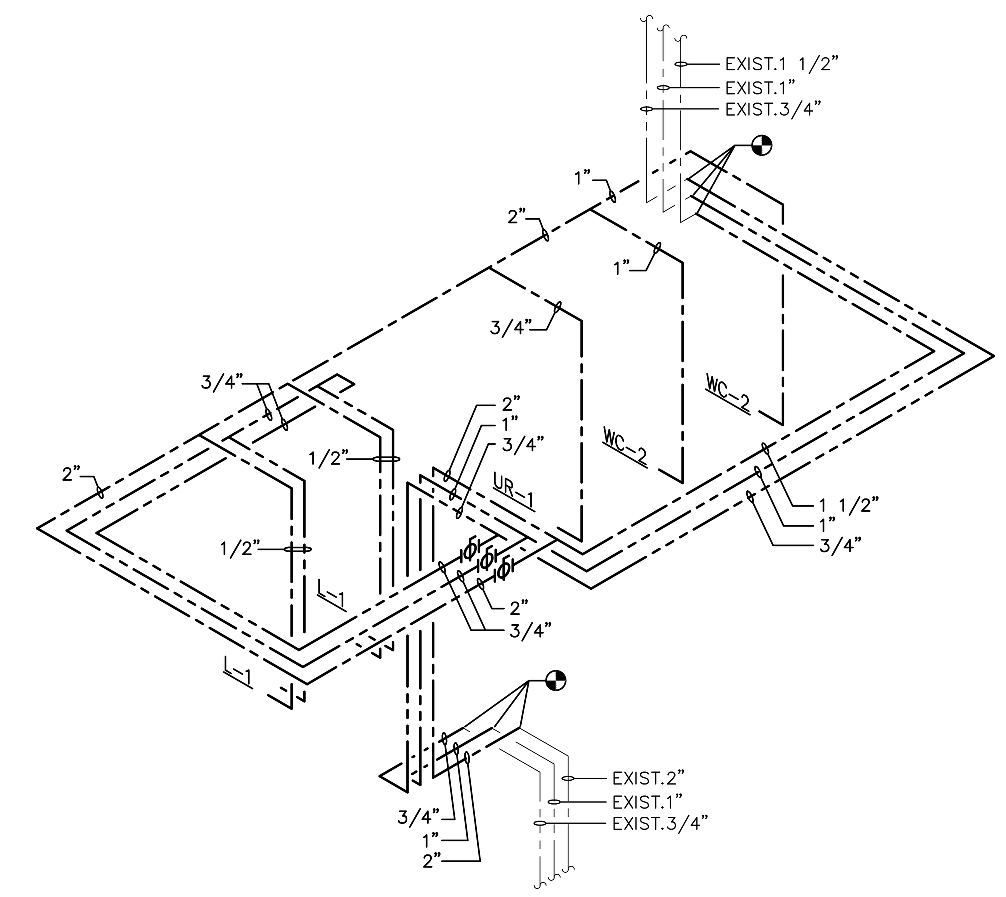

2 — **DOMESTIC WATER RISER DIAGRAM**
NOT TO SCALE

Revisions:	Date

© 2000 Calvin L. Hinz Architects P.C.

These plans are specifically designed for construction by Calvin L. Hinz Architects and are intended for no other purposes. Permission for use of this document in part or whole without written consent of Calvin L. Hinz Architects is prohibited.

IMPORTANT CONTRACTOR'S NOTE

1. ALL CONTRACTORS ARE RESPONSIBLE FOR REVIEWING ENTIRE SET OF DOCUMENTS TO DETERMINE THEIR FULL SCOPE OF WORK. CONTRACTOR SHALL NOT BE ALLOWED EXTRA COSTS DUE TO FAILURE TO REVIEW ENTIRE SET OF DOCUMENTS.
2. ANY USE OF THESE ELECTRONIC DRAWINGS OR SCALING OF THE PRINTED DOCUMENTS ARE DONE SO AT THE CONTRACTORS RISK.

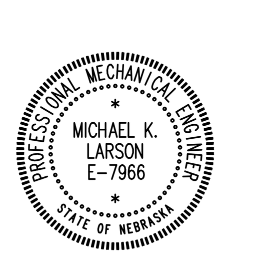

ARCHITECT/ENGINEERS:

CLH Calvin L. Hinz ARCHITECTS P.C.
Calvin L. Hinz Architects, P.C.
3705 North 200th Street
Elkhorn, Nebraska 68022
Phone:402.291.6941 Fax: 402.291.9193

KRS engineering LLC
11620 ARBOR STREET SUITE 100
OMAHA, NEBRASKA 68144
PHONE: 402 . 932 . 0100
FAX: 402 . 932 . 1001
www.krsengineering.com
KRS # 121013-A

COPYRIGHT 2012
This document and the information contained may not be reproduced without the express written permission of KRS Engineering, LLC. Unauthorized copying, disclosure or construction use are prohibited by the copyright law.

Drawing Title: PLUMBING RISER DIAGRAMS AND FIXTURE SCHEDULES

Approved: Project Director: KEVIN HUTSELL

CONSTRUCTION DOCUMENT (CD-3) SUBMITTAL 100%
DECEMBER 31, 2012

Project Title: RENOVATE 2ND FLOOR RESTROOMS GI NWIHCS

Location: VAMC Grand Island, NE

Date	Checked	Drawn
DECEMBER 31, 2012	MKL	CER

Project Number: 636-13-135
Building Number: ONE
Drawing Number: P2.1
Dwg. 7 of 11

Office of Construction and Facilities Management
Department of Veterans Affairs

VA FORM 08-6231

P:\2012\121013-A\CAD\Mechanical\121013-A_P2.1.dwg 12-27-12 10:01:15 AM bjh