DDC SYSTEM POINTS DESCRIPTION	ANALOG INPUT						ANALOG OUTPUT		BINARY INPUT				BINARY OUTPUTS			SYSTEM FEATURES ALARMS									SYSTEM FEATURES PROGRAMS			REMARKS
	TEMPERATURE	PRESSURE	RH	PERCENT	CFM	SETPOINT ADJUSTMENT	DDC	SET POINT ADJ.	STATUS ON/OFF	STATUS OPEN/CLOSED	AIR FLOW STATUS	ALARM CONTACT STATUS	OFF-ON	OPEN-CLOSE	LOCK OUT	HIGH ANALOG	LOW ANALOG	HIGH BINARY	LOW BINARY	SENSOR FAIL	FLOW FAIL	EQUIPMENT FAIL	DIAGNOSTICS	TROUBLE	SCHEDULING	DEMAND LOADING	RESET	
AIR CONDITIONING SYSTEM																												
110-AHU/ACCU 1, 2, 3, 5, & 7, TYP.																												
ACCU CONTROL PANEL						X			X				X									X			X			
SUPPLY AIR	X				X																							
RETURN AIR	X		X		X																							
MIXED AIR	X																											RA CFM SHALL BE CALCULATED FROM SA CFM-OA CFM
AFTER FILTER												X						X										
PRE FILTER												X						X										
SMOKE DETECTOR												X						X										
110-AHU/ACCU 4 & 6, TYP.																												
ACCU CONTROL PANEL						X			X				X									X			X			
SUPPLY AIR	X				X																							
RETURN AIR	X		X		X																							
MIXED AIR	X																											RA CFM SHALL BE CALCULATED FROM SA CFM-OA CFM
AFTER FILTER												X						X										
PRE FILTER												X						X										
SMOKE DETECTOR												X						X										
VFD				X								X										X						
DUCT PRESSURE		X														X												
110-EF-1, 2, 3, 3A, 4, 5, 5A, 6, 7, 9 & 110-SF 1, TYP.									X				X												X			
110-EF-8 & 12	X								X							X												
110-EF-10									X							X						X						
110-EF-11 (WITH MOTORIZED DAMPER)	X								X				X	X		X												
TERMINAL UNITS W/REHEAT (TYP.)																												
DAMPER OPERATOR				X				X																				
ZONE TEMP.																X												
COOLING SETPOINT								X																				
ACTUAL AIR FLOW					X																							
MAXIMUM AIR FLOW	X							X																				
MINIMUM AIR FLOW								X																				
REHEAT COIL									X			X	X															
TERMINAL UNITS (OA)																												
OUTSIDE AIR FLOW					X			X				X																
DOMESTIC HOT WATER SYSTEM (SEE PLUMBING DWGS.)																												
HEATER FAILURE STATUS (TYP.)									X													X						
HOT WATER SUPPLY TEMP (140F)	X											X				X	X											
HOT WATER SUPPLY TEMP (130F)	X											X				X	X											
MEDICAL GAS SYSTEM (SEE PLUMBING DWGS.)																												
MASTER ALARM PANEL												X										X						
LOW VACUUM												X							X									
VACUUM PUMP MALFUNCTION												X										X						
VACUUM PUMP FILTER												X						X										
HIGH DEW POINT												X						X										
HIGH SYSTEM CARBON MONOXIDE												X						X										
MEDICAL AIR COMP. FAILURE												X						X										
DESICCANT DRYER FAILURE												X						X				X						
HIGH DISCHARGE TEMPERATURE												X						X										
DESICCANT DRYER POST FILTER DIRTY												X						X										
DESICCANT DRYER INLET FILTER DIRTY												X						X										
RETURN AIR DRYER POST FILTER DIRTY												X						X										
MAIN LINE FILTER DIRTY												X						X										
MEDICAL AIR - LOW PRESSURE												X							X									
MEDICAL AIR - HIGH PRESSURE												X						X										
OXYGEN - LOW LIQUID LEVEL												X							X									
OXYGEN - RESERVE IN USE												X																
OXYGEN - RESERVE LOW LEVEL												X												X				
OXYGEN - LOW PRESSURE												X							X									
OXYGEN - HIGH PRESSURE												X						X										
FUEL TANK SYSTEM (SEE PLUMBING DWGS.)																												
HIGH FUEL LEVEL												X						X										
LOW FUEL LEVEL												X							X									
FUEL TANK LEAK												X						X										
EMERGENCY GENERATOR SYSTEM (SEE ELECTRICAL DWGS.)																												
EMERGENCY GENERATOR STATUS									X																			
BATTERY CHARGER MALFUNCTION												X										X						
LOW LUBRICATING OIL PRESSURE												X							X									
LOW WATER TEMPERATURE												X							X									
HIGH WATER TEMPERATURE												X						X										
LOW FUEL												X							X									
OVERCRANK												X						X										
OVERSPEED												X						X										
REFRIGERATION SYSTEM (SEE KITCHEN DWGS.)																												
SYSTEM 1 ROOM TEMP.	X															X	X											
SYSTEM 1 REFRIG. SYSTEM STATUS									X													X						
SYSTEM 2 ROOM TEMP.	X															X	X											
SYSTEM2 REFRIG. SYSTEM STATUS									X													X						

1 DDC SYSTEM POINTS LIST
110-H21 NOT TO SCALE

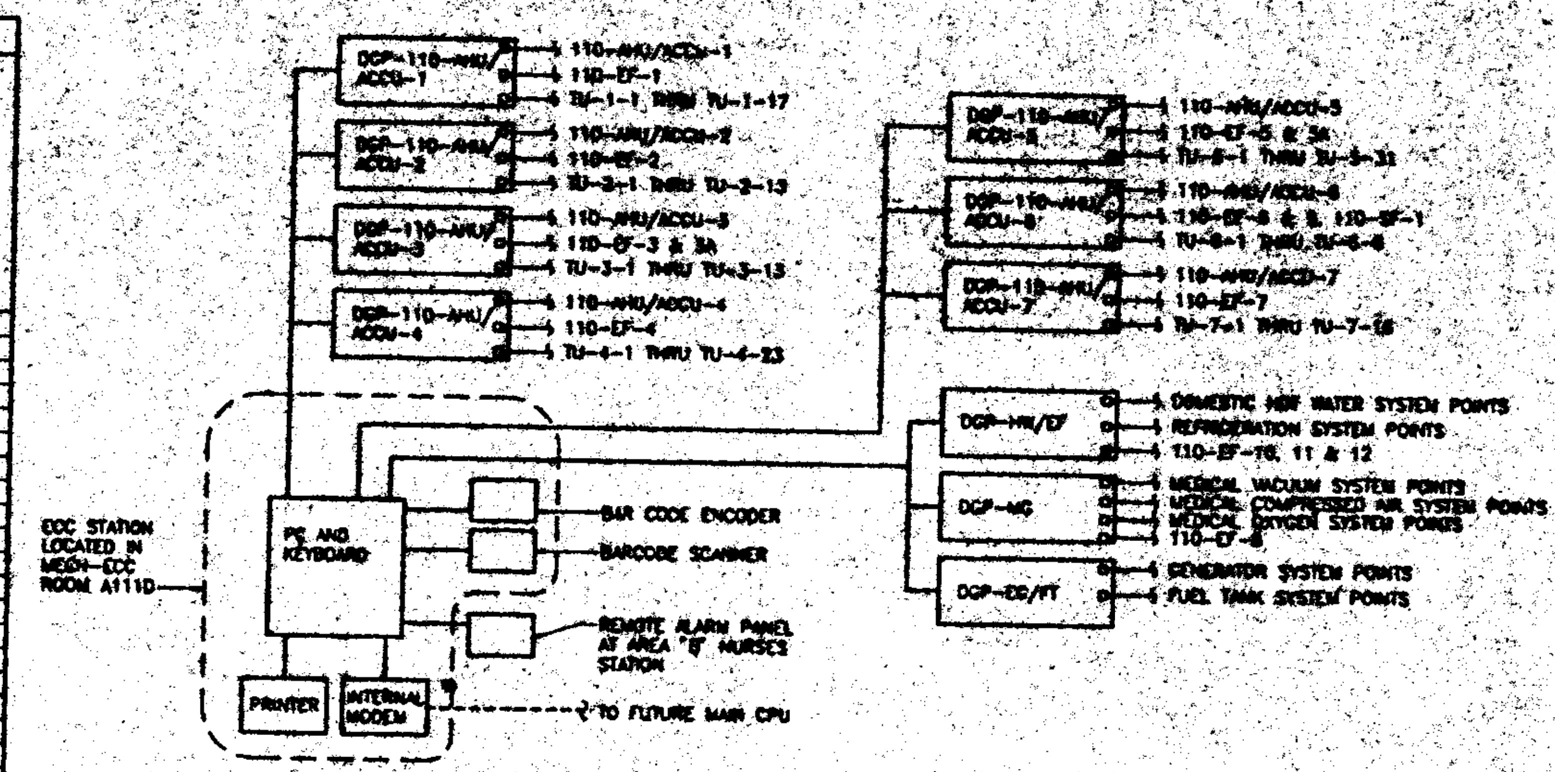

2 DDC SYSTEM BASIC ARCHITECTURE DIAGRAM
110-H21 NOT TO SCALE

DDC SYSTEM SEQUENCE OF OPERATION

I. AIR CONDITIONING SYSTEM:

THE AIR CONDITIONING SPLIT SYSTEMS, TERMINAL UNITS, AND FANS 110-EF-1, 2, 3, 3A, 4, 5, 5A, 6, 7, 9 & 110-SF-1 SHALL BE CONTROLLED AS DESCRIBED ON SHEETS 110-H20. PROVIDE A COLOR GRAPHICS SCHEMATIC DIAGRAM FOR EACH SPLIT SYSTEM SIMILAR TO THE DIAGRAMS ON SHEETS 110-H18 AND 110-H19 WHICH INDICATES THE STATUS OF ALL POINTS ASSOCIATED WITH THE SYSTEM.

II. ADDITIONAL EXHAUST VENTILATION SYSTEMS:

PROVIDE ADDITIONAL MONITORING AND CONTROL OF THE FOLLOWING FANS:

1. 110-EF-8 AND 110-EF-12 SHALL OPERATE VIA A HARD-WIRED T-STAT. ALARM SHALL SOUND ON HIGH ROOM TEMPERATURE.
2. 110-EF-10 SHALL OPERATE CONTINUOUSLY. ALARM SHALL SOUND IF 110-EF-10 FAILS.
3. 110-EF-11 SHALL BE ALLOWED TO OPERATE AND THE MOTORIZED DAMPER SHALL OPEN VIA THE DDC SYSTEM TO VENTILATE ELECTRICAL ROOM A102A WHEN 110-AHU/ACCU-5 IS SHUT DOWN. THE FAN SHALL BE TURNED ON AND OFF VIA A HARD-WIRED T-STAT WIRED IN SERIES WITH THE DDC CONTACT. ALARM SHALL SOUND ON HIGH ROOM TEMPERATURE.

III. DOMESTIC HOT WATER SYSTEM:

1. THE DDC SYSTEM SHALL MONITOR AND ALARM THE FOLLOWING POINTS ON THE HOT WATER SYSTEM:
   A. GAS HEATER STATUS
   B. HIGH OR LOW HOT WATER TEMPERATURE (140°F SUPPLY)
   C. HIGH OR LOW HOT WATER TEMPERATURE (130°F SUPPLY)

IV. OTHER SYSTEM ALARMS:

1. THE DDC SYSTEM SHALL ALSO MONITOR AND ALARM THE FOLLOWING ALARM POINTS INDICATED ON THE PARTS LIST. THESE SIGNALS SHALL BE AUDIBLE, VISUAL, AND HARD COPY PRINTOUT, AND SHALL BE RELAYED TO A REMOTE LOCATION IN THE FUTURE:
   A. MED GAS SYSTEM ALARMS
   B. FUEL TANK SYSTEM ALARMS
   C. EMERGENCY GENERATOR SYSTEM ALARMS
   D. REFRIGERATION SYSTEM ALARMS

ARCHITECTS HAWAII LIMITED
Pacific Tower, Suite 300
1001 Bishop Street
Honolulu, Hawaii 96813
Telephone (808) 523-9636
FAX (808) 521-3260

Drawing title: DDC SYSTEM DIAGRAM, POINTS LIST AND SEQUENCE OF OPERATION

Project title: NEW MEDICAL AND REGIONAL OFFICE CENTER, PHASE I, CENTER FOR THE AGING

Location: VAMROC, HONOLULU, HAWAII

Date: MAY 3, 1995

Project No.: 459-001C

Drawing No.: 110-H21