MECHANICAL SYMBOLS LIST

GENERAL

- Connect new work to existing
- Demolition of work
- Thermostat/Temperature Sensor — T
- Humidistat/Humidity Sensor — H
- Air Monitoring Sensor — S
- Leak Detection Sensor — L
- Fire Damper/Access Door — FD/AD

PIPING

- Existing Chilled Water Return — ECHR
- Existing Chilled Water Supply — ECHS
- Existing Hot Water Return — EHWR
- Existing Hot Water Supply — EHWS
- Chilled Water Return — CHR
- Chilled Water Supply — CHS
- Hot Water Return — HWR
- Hot Water Supply — HWS

VALVES AND PIPING ACCESSORIES

- Direction of fluid flow
- Drain Valve — DV
- Pipe down
- Pipe up
- Pipe takeoff from bottom
- Pipe Anchor Point
- Pipe Guide

GENERAL ABBREVIATIONS

Above Finished Floor	AFF
Ceiling	CLG
Diameter	DIA
Down	DN
Drawing	DWG
Existing	EXIST
Maximum	MAX
Minimum	MIN
Transfer Grille	TG1
Typical	TYP

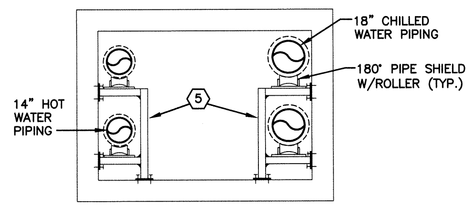

SECTION A–A

SCALE: 1/4" = 1'-0"

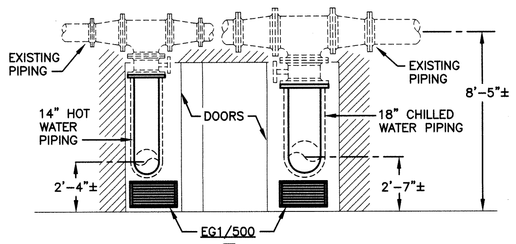

SECTION D–D

SCALE: 1/4" = 1'-0"

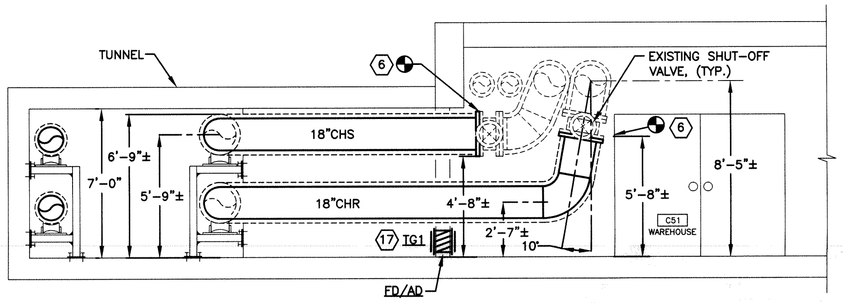

SECTION B–B

SCALE: 1/4" = 1'-0"

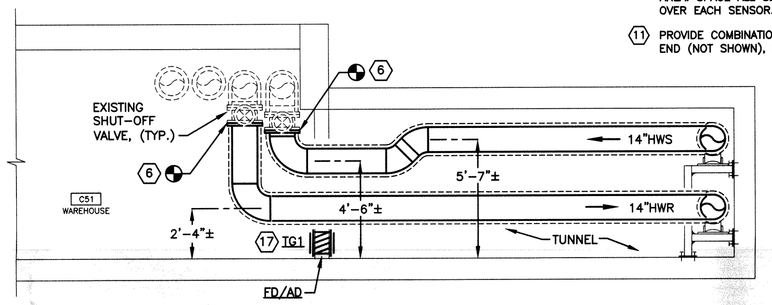

SECTION C–C

SCALE: 1/4" = 1'-0"

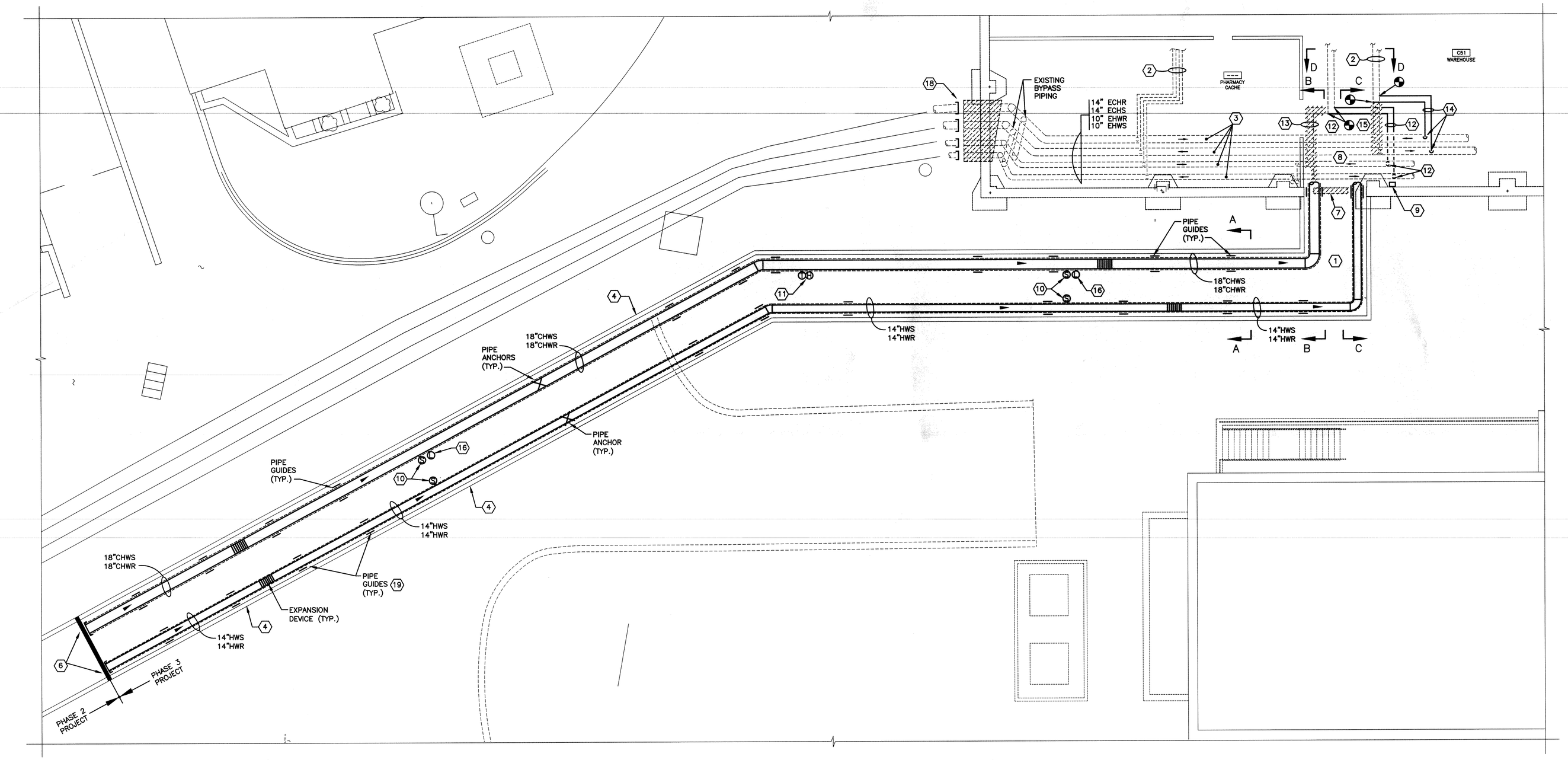

PARTIAL SITE PLAN

SCALE: 1/8" = 1'-0"

GENERAL NOTES:

1. ALL MECHANICAL WORK UNDER "M" DRAWINGS SHALL BE COMPLETE WORKING SYSTEMS, WHETHER SHOWN OR NOT IN THEIR ENTIRETY.
2. WHEN ALL PIPING SYSTEMS ARE COMPLETE, (INCLUDING BOTH PHASE 2 AND PHASE 3 WORK), CONTRACTOR SHALL BE RESPONSIBLE FOR ENTIRE COMMISSIONING OF CHILLED WATER AND HOT WATER SYSTEMS, FROM CONNECTIONS AT EXISTING CHILLER BUILDING TO CONNECTION POINTS IN WAREHOUSE OF EXISTING HOSPITAL. THIS INCLUDES POT FEEDER/WATER FILTER RELOCATION AS SHOWN ON PHASE 2 DRAWINGS. SEE COMMISSIONING SPECIFICATIONS. (1)
3. CONTRACTOR TO FIELD VERIFY ALL EXISTING CONDITIONS AND CONNECTION POINTS PRIOR TO ANY DEMOLITION AND IN COORDINATION WITH FACILITY PERSONNEL.
4. INSTALL ALL EXPANSION JOINT EQUIPMENT INCLUDING EXPANSION DEVICE, PIPE GUIDES, PIPE ANCHORS, AND SPACING REQUIREMENTS, PER MANUFACTURER'S RECOMMENDATIONS. EXPANSION JOINTS TO BE METRAFLEX INC. MODEL "METRAGATOR"; OR EQUAL. SEE SPECIFICATIONS. COORDINATE WITH STRUCTURAL DRAWINGS.
5. ALL WORK DONE AROUND THE CACHE AREA IS TO BE COORDINATED WITH FACILITY PERSONNEL. ENTRANCE INTO CACHE AREA IS NOT TO BE BLOCKED AT ANY TIME.
6. CONTRACTOR IS TO RE-CALIBRATE EXISTING FLOW METER IN ORDER TO VERIFY FLOW ACCURACIES AFTER COMPLETION OF PROJECT.
7. MECHANICAL CONTRACTOR SHALL PROVIDE WATER TREATMENT FOR THE RE-FILLING OF THE CHILLED WATER AND HOT WATER SYSTEMS PRIOR TO ACTIVATION OF THE NEW PIPING. COORDINATE WITH FACILITY PERSONNEL. (1)

KEYED NOTES:

1. MAINTAIN ADEQUATE ACCESS AT THIS LOCATION FOR ENTRY BETWEEN PIPING RACKS FOR A PALLET JACK AND PALLET FOR MAINTENANCE OF PIPING TUNNEL, MINIMUM OF 48". COORDINATE WITH FACILITY PERSONNEL. SEE SECTION A–A.
2. EXISTING PIPING TO REMAIN AS IS.
3. EXISTING CHILLED WATER AND HOT WATER PIPING.
4. NEW PIPING TUNNEL, SEE STRUCTURAL DRAWINGS.
5. SEE STRUCTURAL DRAWINGS FOR PIPE SUPPORT INFORMATION.
6. CONNECT NEW PIPING AT LOCATION INDICATED, COORDINATE WITH FACILITY PERSONNEL.
7. DISCONNECT & REMOVE EXISTING RADIATOR. CUT BACK PIPING TO BELOW FLOOR AND CAP. PATCH FLOOR TO MATCH ADJACENT SURFACES. SEE ARCHITECTURAL DRAWINGS FOR ASBESTOS REMOVAL.
8. SEE SECTIONS B–B AND C–C FOR WORK IN THE AREA.
9. PROVIDE GAS DETECTION MONITORING AND CONTROL UNIT AS SHOWN. COORDINATE LOCATION OF UNIT WITH FACILITY PERSONNEL. TIE UNIT INTO TRANE TRACE CONTROL SYSTEM AS REQUIRED FOR FACILITY MONITORING AND ALARM INDICATION. UNIT TO BE HONEYWELL ANALYTICS, MODEL NO. VA301C; OR EQUAL.
10. PROVIDE REMOTE OXYGEN AND CARBON MONOXIDE GAS SENSORS AS SHOWN. MOUNT EACH TYPE SENSOR ON PIPE STANCHIONS ENDS, (NOT SHOWN), FOR ACCESSIBILITY. SENSORS TO BE HONEYWELL ANALYTICS MODEL NO. EXSM POINT; OR EQUAL. PROVIDE (3) OF EACH TYPE SENSOR FOR INSTALLATION IN PHASE 2 AREA. SPACE ALL SENSORS A MAXIMUM OF 100' (50'–0" RADIUS) APART. PROVIDE PROTECTIVE GUARD OVER EACH SENSOR. INSTALL SENSORS PER MANUFACTURER'S RECOMMENDATIONS.
11. PROVIDE COMBINATION TEMPERATURE/HUMIDITY SENSOR AS SHOWN. MOUNT SENSOR ON PIPE STANCHIONS END (NOT SHOWN), FOR ACCESSIBILITY.
12. NEW TAPS TO BE CONNECTED TO EXISTING HOT WATER PIPING MAINS, AND EXTENDED TO EXISTING PIPING, AS SHOWN. PIPING TO BE RECONNECTED AT LOCATIONS INDICATED. WORK TO BE PERFORMED BY FACILITY PERSONNEL AND ONLY SHOWN FOR DRAWING CLARITY.
13. EXISTING HOT WATER PIPING TO BE DISCONNECTED AND RELOCATED, TO MAKE ROOM FOR NEW PIPING CONNECTIONS. WORK TO BE PERFORMED BY FACILITY PERSONNEL AND ONLY SHOWN FOR DRAWING CLARITY.
14. NEW TAPS TO BE CONNECTED TO EXISTING CHILLED WATER PIPING MAINS, AND EXTENDED TO EXISTING PIPING, AS SHOWN. PIPING TO BE RECONNECTED AT LOCATIONS INDICATED. WORK TO BE PERFORMED BY FACILITY PERSONNEL AND ONLY SHOWN FOR DRAWING CLARITY.
15. EXISTING CHILLED WATER PIPING TO BE DISCONNECTED AND RELOCATED, TO MAKE ROOM FOR NEW PIPING CONNECTIONS. WORK TO BE PERFORMED BY FACILITY PERSONNEL AND ONLY SHOWN FOR DRAWING CLARITY.
16. PROVIDE REMOTE LEAK DETECTION SENSORS AS SHOWN. MOUNT EACH TYPE SENSOR PER MANUFACTURER'S RECOMMENDATIONS. SENSORS TO BE KELE MODEL NO. WD–1B–C; OR EQUAL. PROVIDE (3) OF EACH SENSOR FOR INSTALLATION IN PHASE 2 AREA. SPACE ALL SENSORS A MAXIMUM OF 100' APART AND IN COORDINATION WITH FACILITY PERSONNEL. INSTALL SO AS NOT TO BE A TRIPPING HAZARD. SENSORS TO BE TIED BACK TO TEMPERATURE CONTROL SYSTEM FOR MONITORING AND ALARMING.
17. PROVIDE EXHAUST GRILLE (EG1/500), (TYP. FOR 2), WITH 3–HOUR RATED FIRE DAMPER IN LOCATION INDICATED. GRILLE TO BE 24" LONG × 12" HIGH, 500 CFM, NAILOR MODEL 51FH–HD; OR EQUAL. 3–HOUR FIRE DAMPER TO BE NAILOR MODEL NO. 0510V; OR EQUAL. INSTALL PER MANUFACTURER'S RECOMMENDATIONS. SEE SECTION D–D.
18. EXISTING PIPING TO BE DISCONNECTED AND CAPPED AT LOCATION INDICATED. INTERIOR DEMOLITION TO BE PERFORMED BY FACILITY PERSONNEL. COORDINATE WITH ARCHITECTURAL DRAWINGS.
19. PROVIDE PIPE SUPPORTS AT EACH PIPE GUIDE, TYPICAL.

SEQUENCE OF OPERATIONS:

1. EXHAUST FAN (EF1), (INSTALLED IN PHASE 2)

   EXHAUST FAN SHALL RUN CONTINUOUSLY.

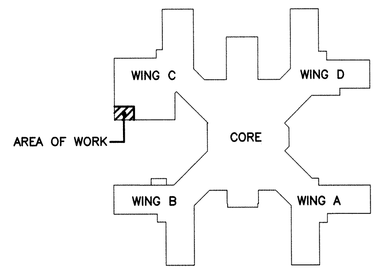

KEY PLAN

NO SCALE

CALLED NORTH

POINTS LIST FOR MECHANICAL EQUIPMENT

JOB: 528A8–10–814
BUILDING: REPAIR HOT WATER LINES PHASE III
PAGE:

SYSTEM: / SYSTEM COMPONENT:	POINT ID	ABBREVIATION	POINT LEGEND: SEQUENCE OF OPERATION	POINT LEGEND: DIGITAL CONTROL SYSTEM	POINT LEGEND: STAND ALONE	SYSTEM OUTPUTS: BINARY	SYSTEM OUTPUTS: ANALOG	SYSTEM INPUTS: BINARY: STATUS	SYSTEM INPUTS: BINARY: PROOF	SYSTEM INPUTS: BINARY: ALARM	SYSTEM INPUTS: ANALOG: TEMPERATURE (T)	SYSTEM INPUTS: ANALOG: HUMIDITY (H)	SYSTEM INPUTS: ANALOG: PRESSURE	SYSTEM INPUTS: ANALOG: FLOW	SYSTEM INPUTS: ANALOG: AMPS	SYSTEM SOFTWARE/CONTROL: ALARM PROCESSING: ALARM DISPLAY	SYSTEM SOFTWARE/CONTROL: ALARM PROCESSING: ALARM LOG	SYSTEM SOFTWARE/CONTROL: ALARM PROCESSING: ALARM PRIORITY	SYSTEM SOFTWARE/CONTROL: APPLICATION/FUNCTION: SCHEDULE	SYSTEM SOFTWARE/CONTROL: APPLICATION/FUNCTION: TREND LOG	SYSTEM SOFTWARE/CONTROL: APPLICATION/FUNCTION: SEQUENCE OF OPERATION	SYSTEM SOFTWARE/CONTROL: APPLICATION/FUNCTION: PID CONTROL	SYSTEM SOFTWARE/CONTROL: APPLICATION/FUNCTION: ENERGY CALCULATION	REMARKS
Exhaust Fan (EF1)	B0–1	EF1		●			●●●									●								●
Dew Detection Sensor	B0–2	DSE					●●●				●●●													
Oxygen Air Monitoring	B0–3	O2M					●●●				●●●			●										
Carbon Monoxide Air Monitoring	B0–4	COM					●●●				●●●			●										

(1)

FINAL DESIGN (100%)
FULLY SPRINKLERED

FFA #7574

Revisions	Date
1 FINAL SUBMISSION REVIEW	6–13–13

VA FORM 08–6231

CONSULTANTS:

Quality Service Since 1944
FRIEDMAN FISHER ASSOCIATES, P.C.
CONSULTING ENGINEERS
22 Aviation Road, Albany, New York 12205
TEL (518) 458–7040 FAX (518) 458–7043
mail@friedmanfisher.com

RYAN–BIGGS ASSOCIATES, P.C.
257 Ushers Road 518 406 5506
Clifton Park, NY 12065 406 5514
www.ryanbiggs.com

EBERLIN AND EBERLIN, P.C.
31 SODOM ROAD, BREWSTER, NEW YORK 10509
CONSULTING ENGINEERS, PLANNERS, LANDSCAPE ARCHITECTS
845.562.0359 PHONE 845.279.2062 FAX

LICENSED PROFESSIONAL ENGINEER — CERTIFICATE OF AUTHORIZATION — 073128 — STATE OF NEW YORK

ARCHITECT/ENGINEERS:

Hyman Hayes
ASSOCIATES
6 WEMBLEY COURT, ALBANY, NEW YORK 12205
(518) 452-3470 (518) 452-3783 Fax
Over 20 years of quality architectural service

HHA Proj. 12072

Drawing Title
MECHANICAL:
PARTIAL SITE PLAN, SECTIONS + SYMBOLS LIST

Approved Project Director

Project Title
REPAIR HOT WATER LINES
PHASE III
Stratton VA Medical Center

Location
Albany, New York

Date	Checked	Drawn
6-13-13	BJF	PBL

Project Number
VA 528A8-10-814

Building Number
-

Drawing Number
M1.1
Dwg. 17 of 19

Office of Construction and Facilities Management
Department of Veterans Affairs