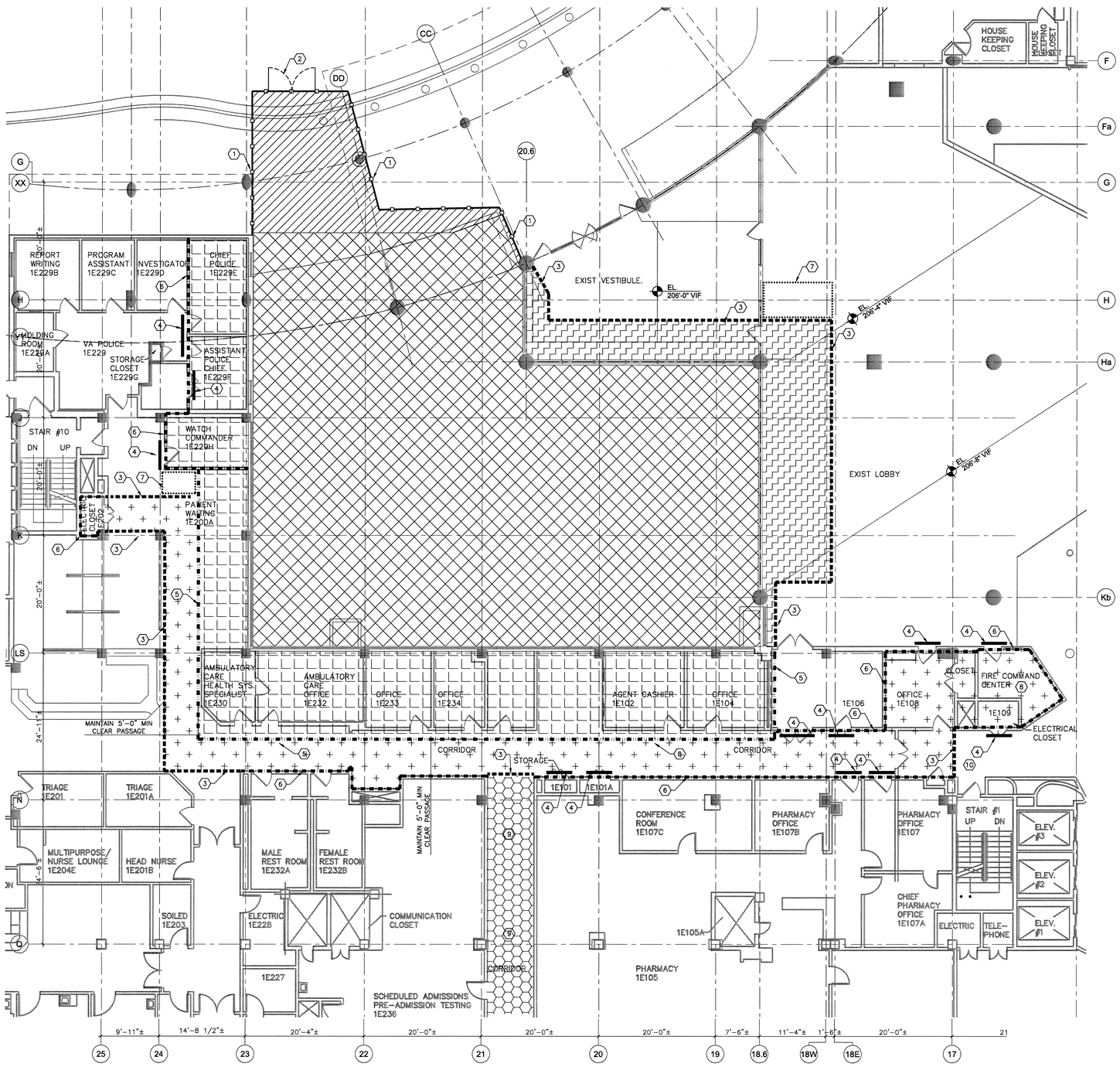

1F ICRA PLAN– FIRST FLOOR

SCALE: 1/8" = 1'-0"

SPECIFIC INTERIM LIFE SAFETY AND INFECTION CONTROL PROCEDURES EXISTING LEVEL G.

1. ICRA DRAWINGS ARE INCLUDED FOR THE CONTRACTOR TO GENERALLY UNDERSTAND THE LOCATION AND SCOPE OF BARRIER TYPE AND LOCATION. THE CONTRACTOR IS RESPONSIBLE TO REVIEW ICRA REQUIREMENTS DIRECTLY WITH THE HOSPITAL AND TO DEVELOP A WORKING ICRA PLAN IN CONJUNCTION WITH THE HOSPITAL. DEVIATIONS FROM THE ICRA DRAWINGS SHALL NOT BE CAUSE FOR ADDITIONAL COST TO THE GOVERNMENT. ALL APPROPRIATE MEASURES MUST BE TAKEN TO MEET THE CLASS PRECAUTIONS PER THE GOVERNMENT'S INFECTION CONTROL RISK ASSESSMENT PROGRAM.

2. THE CONTRACTOR MUST COORDINATE THE SHUTDOWN AND PROTECTION OF ALL SUPPLY, RETURN AND EXHAUST DUCTWORK IN THE CONSTRUCTION AREA WITH THE HOSPITAL. ALL DUCTWORKMUST BE PROTECTED TO ELIMINATE POSSIBLE CONTAMINATION OF CONSTRUCTION DUST AND DEBRIS.

3. ALL PRELIMINARY WORK TO CONSTRUCT BARRIERS AND SECURE THE CONSTRUCTION AREA MUST BE COMPLETED AT TIMES WHEN THE SUITE IS NOT IN USE AND MUST BE COORDINATED WITH THE HOSPITAL. APPROPRIATE INFECTION CONTROL PRECAUTIONS MUST BE TAKEN TO COMPLETE ITEMS # 4 – 7.

4. FOR THE CONSTRUCTION AREA. A HEAVY DUTY POLY VESTIBULE TO BE CONSTRUCTED ON THE CORRIDOR SIDE OF WORK AREA. THIS WILL SERVE AS THE ENTRANCE/EXIT POINT FOR THE CONSTRUCTION AREA. CONSTRUCTION PERSONNEL WILL BE REQUIRED TO STOP IN THE VESTIBULE, CLEAN THEMSELVES OF DUST AND DEBRIS WITH A HEPA FILTERED VACUUM, PUT ON BOOT COVERS AND LEAVE THE CONSTRUCTION AREA. BOOT COVERS ARE NOT TO BE WORN IN CONSTRUCTION AREA.

5. ONE HEPA FILTRATION FAN UNIT MUST BE IN PLACE AND RUNNING AT ALL TIMES. UNIT TO BE VENTED TO CORRIDOR.

6. ONE DIGITAL RECORDING MANOMETER MUST BE INSTALLED ON CORRIDOR SIDE, ONE SENSOR LOCATED IN A NON–TURBULENT POINT IN THE WORK AREA AND ONE LIKEWISE IN THE ADJOINING NON–WORK AREA, IN OPERATION AND CALIBRATED PRIOR TO START ON ANY CONSTRUCTION WORK. UNIT MUST BE HARDWIRED TO ASSURE TO ASSURE THAT IT IS IN OPERATION FOR THE DURATION OF THE WORK TO BE COMPLETED. NEGATIVE PRESSURE MUST BE MAINTAINED AT – .01 INCHES OF WATER. THE WORK AREA WILL BE NEGATIVELY PRESSURIZED TO ADJACENT HOSPITAL OCCUPIED NON–WORK AREAS.

7. CONTRACTOR TO SEAL EXISTING WALLS TO DECK TO CREATE A DUST BARRIER AROUND THE ENTIRE CONSTRUCTION PHASE AREA.

8. DEMOLITION MAY COMMENCE AFTER COMPLETION OF ITEMS 1 – 7.

9. CONTRACTOR IS RESPONSIBLE FOR MAINTAINING THE INTEGRITY OF THE CONSTRUCTION BARRIER FOR THE DURATION OF THE PHASE. BARRIER INTEGRITY MUST BE MAINTAINED DURING NON–WORK TIMES.

10. ALL CONSTRUCTION DEBRIS AND MATERIAL WILL BE BROUGHT INTO THE CONSTRUCTION AREA OR LEAVE THROUGH THE CONSTRUCTION AREA THROUGH THE ENTRANCE/EXIT VESTIBULE. ALL DEBRIS AND MATERIAL WILL BE TRANSPORTED FROM THE WORK AREA THROUGH THE OCCUPIED AREAS TO THE EXIT IN COVERED SECURED CONTAINERS.

11. ALL CONSTRUCTION DEBRIS AND MATERIAL WILL BE TO AND FROM THE FIRST FLOOR THROUGH THE OUTSIDE CONSTRUCTION ENTRANCE /STAGING AREA AT STAIR TOWER S2. THE CONTRACTOR IS RESPONSIBLE FOR MAINTAINING THE PATH BETWEEN THE CONSTRUCTION AREA AND THE CONSTRUCTION ENTRANCE/STAGING AREA FOR THE DURATION OF THE PROJECT.

12. ALL WORK ON THE CORRIDOR SIDE OF THE BARRIER MUST BE COORDINATED WITH THE HOSPITAL AND CONDUCTED "OFF HOURS" USING APPROPRIATE/APPROVED INFECTION CONTROL PRECAUTIONS. NO PERSONAL ARE PERMITTED. TO ENTER THE SUITE UNLESS THEIR PRESENCE IS COORDINATED WITH THE HOSPITAL. THIS INCLUDES THE REMOVAL OF THE ENTRANCE/EXIST VESTIBULE.

13. UPON COMPLETION OF ALL WORK, TEMPORARY BARRIERS ARE TO BE REMOVED IN COORDINATION WITH THE HOSPITAL AFTER CONSTRUCTION HAS BEEN THOROUGHLY CLEANED.

14. EXISTING SPRINKLER EQUIPMENT: EXISTING SPRINKLER EQUIPMENT SHALL BE REMOVED WHERE INDICATED AND NEW PIPING AND SPRINKLER HEADS INSTALLED. SYSTEMS SHALL NOT BE REMOVED FROM SERVICE WITHOUT PRIOR NOTIFICATION OF PLANT ENGINEERING AND THE SAFETY DEPARTMENT. PIPING THAT SERVES AREAS OF THE BUILDING OUTSIDE THE WORK AREA SHALL REMAIN OPERATIONAL THROUGHOUT CONSTRUCTION. TEMPORARY PROTECTION SHALL BE PROVIDED IN ACCORDANCE WITH NFPA 241, CONSTRUCTION, ALTERATION, AND DEMOLITION OPERATIONS.

15. FIRE ALARM NOTE:

1. CIRCUITS AND DEVICES THAT ARE OUTSIDE THE CONSTRUCTION AREA SHALL BE MAINTAINED OPERATIONAL THROUGHOUT CONSTRUCTION AND SHALL BE RE–CIRCUITED AS NECESSARY.
2. INTERIM LIFE SAFETY MEASURES IN THE CONSTRUCTION AREA:
   a. PROVIDE ONE HEAT DETECTOR FOR EACH 2,500 SQUARE FEET IN THE CONSTRUCTION AREA.
   b. PROVIDE A MANUAL PULL STATION AT EACH CONSTRUCTION AREA ENTRANCE.
   c. PROVIDE A SPEAKER/STROBE AT EACH EXIT FROM THE CONSTRUCTION AREA.
   d. PROTECT ALL TEMPORARY FIRE ALARM DEVICES THROUGHOUT CONSTRUCTION.

16. INTERIM LIFE SAFETY:
ALL LIFE SAFETY FEATURES OF THE BUILDING MUST BE MAINTAINED DURING CONSTRUCTION. INTERIM LIFE SAFETY WILL BE IMPLEMENTED WITH THE CONSTRUCTION OF THE HOSPITAL AT ANY POINT AT WHICH THE LIFE SAFETY FEATURES OF THE BUILDING ARE IMPAIRED IN ANY WAY. THIS INCLUDES :
   a. DISRUPTION OF FIRE ALARM OR FIRE SUPPRESSION SYSTEM.
   b. INTERRUPTION OF A PATH OF EGRESS.
   c. WORK AFFECTING ANY RATING ASSEMBLIES TO REMAIN INCLUDING SMOKE BARRIERS , FIRE BARRIERS AND FIRE WALLS.

17. REFER TO SPECIFICATION SECTION 01 00 00 FOR ICRA PERMIT DEFINING ICRA TYPES AND CLASSES.

WORK AREA 1
INFECTION CONTROL RISK ASSESSMENT TYPE D, CLASS III.

WORK AREA 2
INFECTION CONTROL RISK ASSESSMENT TYPE D, CLASS III.

WORK AREA 3
INFECTION CONTROL RISK ASSESSMENT TYPE D, CLASS III.

WORK AREA 4
INFECTION CONTROL RISK ASSESSMENT TYPE C, CLASS III.

WORK AREA 5
INFECTION CONTROL RISK ASSESSMENT TYPE C, CLASS III.

WORK AREA 6
INFECTION CONTROL RISK ASSESSMENT TYPE B, CLASS II.

WORK AREA 7
INFECTION CONTROL RISK ASSESSMENT TYPE C, CLASS III.

WORK AREA 8
INFECTION CONTROL RISK ASSESSMENT TYPE C, CLASS II.

ICRA BARRIER TYPES AND KEYED NOTES (#)

(1) INDICATES CONSTRUCTION FENCE WITH GATE

(2) PROVIDE ACCESS GATE W/ LOCK

(3) TEMPORARY ICRA BARRIER. PROVIDE HEAVY DUTY POLY ON STUD CONSTRUCTION SEALED TIGHT AT FLOOR, CEILING AND SEAMS. PROVIDE ZIP DOOR TO ACCESS ENCLOSED WORK AREA.

(4) PROVIDE PLASTIC SHEETING AT EXISTING DOOR OPENINGS SEALED TIGHT AT FLOOR AND DOOR FRAME.

(5) NEW METAL STUD AND GWB ICRA AS BARRIER. PROVIDE DRYWALL 2 SIDES OF STUD AND EXTEND AND SEAL TO METAL DECK IN ORDER TO PREVENT DUST MIGRATION TO OCCUPIED AREAS. SEAL TO FLOOR AND ALL SEAMS AND DRYWALL JOINTS.

(6) EXISTING PARTITION TO SERVE ICRA BARRIER. PROVIDE NEW PLASTIC SHEETING AT TOP PARTITION TO UNDERSIDE OF METAL DECK IN ORDER TO SEAL AGAINST DUST MIGRATION

(7) PROVIDE ANTE ROOM WHERE SHOWN ON PLAN

(8) FIRE COMMEND CENTER MUST BE ACCESSIBLE AT ALL TIMES REGARDLESS OF CONSTRUCTION ACTIVITIES

(9) PROVIDE TEMPORARY DUST BARRIER FOR WORK THIS AREA. CONSTRUCT HEAVY DUTY POLY ON ZIP POLES AS NEEDED TO CONTROL DUST MIGRATION INTO EXISTING CORRIDOR OR OCCUPIED SPACES. ANY EXTENT PERIOD OF CORRIDOR SHUT DOWN MUST BE COORDINATED WITH THE HOSPITAL. REFER TO DETAIL 2/EST01 FOR EXTENT OF TEL/ COM AND DATA WORK AND ICRA.

(10) MAINTAIN PATH OF EGRESS AT ALL TIMES

(11) MAINTAIN PATH OF EGRESS AT ALL TIMES

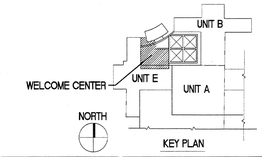

KEY PLAN

Revisions	Date
ISSUE 1 - ISSUE FOR CONSTRUCTION	04.30.2013
95 % SUBMISSION	02.17.2012
75 % SUBMISSION	03.16.2011
25 % SUBMISSION	10.29.2010

VA FORM 08–6231

CONSULTANTS:

DISTRICT OF COLUMBIA JOHN L. CAPELLI No.101557 REGISTERED ARCHITECT

ARCHITECT/ENGINEERS:

EWING COLE
1025 Connecticut Avenue, NW
Suite 900
Washington, DC 20036-5405
Tel: 202-467-1500 Fax: 202-296-8950

Drawing Title: ICRA PLAN - FIRST FLOOR

Approved Project Director:

Project Title: OIF / OEF WELCOME CENTER DEPARTMENT OF VETERANS AFFAIRS VAMC

Location: Veterans Affairs Medical Center, 50 Irving Street NW Washington DC

Date: 4-30-2013 | Checked: CH | Drawn: AN

Project Number: 688-334 OIF/OEF

Building Number:

Drawing Number: AD100 –

Office of Construction and Facilities Management

Department of Veterans Affairs

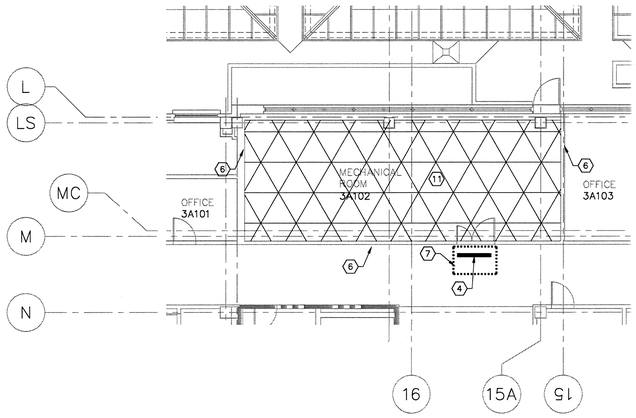

3C ICRA PLAN– THIRD FLOOR PLAN

SCALE: 1/8" = 1'-0"

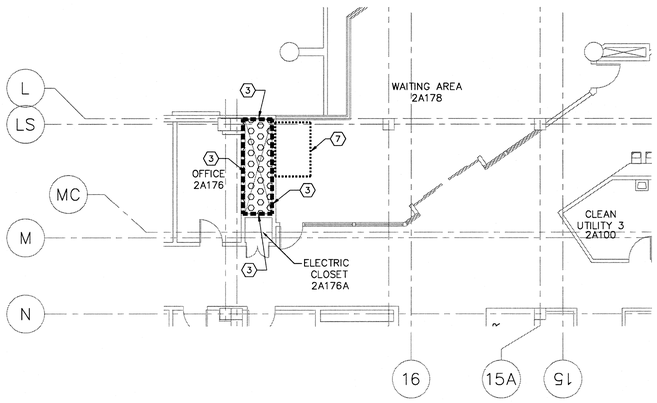

3F ICRA PLAN– SECOND FLOOR PLAN

SCALE: 1/8" = 1'-0"

SPECIFIC INTERIM LIFE SAFETY AND INFECTION CONTROL PROCEDURES EXISTING LEVEL G.

1. ICRA DRAWINGS ARE INCLUDED FOR THE CONTRACTOR TO GENERALLY UNDERSTAND THE LOCATION AND SCOPE OF BARRIER TYPE AND LOCATION. THE CONTRACTOR IS RESPONSIBLE TO REVIEW ICRA REQUIREMENTS DIRECTLY WITH THE HOSPITAL AND TO DEVELOP A WORKING ICRA PLAN IN CONJUNCTION WITH THE HOSPITAL. DEVIATIONS FROM THE ICRA DRAWINGS SHALL NOT BE CAUSE FOR ADDITIONAL COST TO THE GOVERNMENT. ALL APPROPRIATE MEASURES MUST BE TAKEN TO MEET THE CLASS PRECAUTIONS PER THE GOVERNMENT'S INFECTION CONTROL RISK ASSESSMENT PROGRAM.

2. THE CONTRACTOR MUST COORDINATE THE SHUTDOWN AND PROTECTION OF ALL SUPPLY, RETURN AND EXHAUST DUCTWORK IN THE CONSTRUCTION AREA WITH THE HOSPITAL. ALL DUCTWORKMUST BE PROTECTED TO ELIMINATE POSSIBLE CONTAMINATION OF CONSTRUCTION DUST AND DEBRIS.

3. ALL PRELIMINARY WORK TO CONSTRUCT BARRIERS AND SECURE THE CONSTRUCTION AREA MUST BE COMPLETED AT TIMES WHEN THE SUITE IS NOT IN USE AND MUST BE COORDINATED WITH THE HOSPITAL. APPROPRIATE INFECTION CONTROL PRECAUTIONS MUST BE TAKEN TO COMPLETE ITEMS # 4 – 7.

4. FOR THE CONSTRUCTION AREA. A HEAVY DUTY POLY VESTIBULE TO BE CONSTRUCTED ON THE CORRIDOR SIDE OF WORK AREA. THIS WILL SERVE AS THE ENTRANCE/EXIT POINT FOR THE CONSTRUCTION AREA. CONSTRUCTION PERSONNEL WILL BE REQUIRED TO STOP IN THE VESTIBULE, CLEAN THEMSELVES OF DUST AND DEBRIS WITH A HEPA FILTERED VACUUM, PUT ON BOOT COVERS AND LEAVE THE CONSTRUCTION AREA. BOOT COVERS ARE NOT TO BE WORN IN CONSTRUCTION AREA.

5. ONE HEPA FILTRATION FAN UNIT MUST BE IN PLACE AND RUNNING AT ALL TIMES. UNIT TO BE VENTED TO CORRIDOR.

6. ONE DIGITAL RECORDING MANOMETER MUST BE INSTALLED ON CORRIDOR SIDE. ONE SENSOR LOCATED IN A NON–TURBULENT POINT IN THE WORK AREA AND ONE LIKEWISE IN THE ADJOINING NON–WORK AREA, IN OPERATION AND CALIBRATED PRIOR TO START ON ANY CONSTRUCTION WORK. UNIT MUST BE HARDWIRED TO ASSURE TO ASSURE THAT IT IS IN OPERATION FOR THE DURATION OF THE WORK TO BE COMPLETED. NEGATIVE PRESSURE MUST BE MAINTAINED AT –.01 INCHES OF WATER. THE WORK AREA WILL BE NEGATIVELY PRESSURIZED TO ADJACENT HOSPITAL OCCUPIED NON–WORK AREAS.

7. CONTRACTOR TO SEAL EXISTING WALLS TO DECK TO CREATE A DUST BARRIER AROUND THE ENTIRE CONSTRUCTION PHASE AREA.

8. DEMOLITION MAY COMMENCE AFTER COMPLETION OF ITEMS 1 – 7.

9. CONTRACTOR IS RESPONSIBLE FOR MAINTAINING THE INTEGRITY OF THE CONSTRUCTION BARRIER FOR THE DURATION OF THE PHASE. BARRIER INTEGRITY MUST BE MAINTAINED DURING NON–WORK TIMES.

10. ALL CONSTRUCTION DEBRIS AND MATERIAL WILL BE BROUGHT INTO THE CONSTRUCTION AREA OR LEAVE THROUGH THE CONSTRUCTION AREA THROUGH THE ENTRANCE/EXIT VESTIBULE. ALL DEBRIS AND MATERIAL WILL BE TRANSPORTED FROM THE WORK AREA THROUGH THE OCCUPIED AREAS TO THE EXIT IN COVERED SECURED CONTAINERS.

11. ALL CONSTRUCTION DEBRIS AND MATERIAL WILL BE TO AND FROM THE FIRST FLOOR THROUGH THE OUTSIDE CONSTRUCTION ENTRANCE /STAGING AREA AT STAIR TOWER S2. THE CONTRACTOR IS RESPONSIBLE FOR MAINTAINING THE PATH BETWEEN THE CONSTRUCTION AREA AND THE CONSTRUCTION ENTRANCE/STAGING AREA FOR THE DURATION OF THE PROJECT.

12. ALL WORK ON THE CORRIDOR SIDE OF THE BARRIER MUST BE COORDINATED WITH THE HOSPITAL AND CONDUCTED "OFF HOURS" USING APPROPRIATE/APPROVED INFECTION CONTROL PRECAUTIONS. NO PERSONAL ARE PERMITTED. TO ENTER THE SUITE UNLESS THEIR PRESENCE IS COORDINATED WITH THE HOSPITAL. THIS INCLUDES THE REMOVAL OF THE ENTRANCE/EXIST VESTIBULE.

13. UPON COMPLETION OF ALL WORK, TEMPORARY BARRIERS ARE TO BE REMOVED IN COORDINATION WITH THE HOSPITAL AFTER CONSTRUCTION HAS BEEN THOROUGHLY CLEANED.

14. EXISTING SPRINKLER EQUIPMENT: EXISTING SPRINKLER EQUIPMENT SHALL BE REMOVED WHERE INDICATED AND NEW PIPING AND SPRINKLER HEADS INSTALLED. SYSTEMS SHALL NOT BE REMOVED FROM SERVICE WITHOUT PRIOR NOTIFICATION OF PLANT ENGINEERING AND THE SAFETY DEPARTMENT. PIPING THAT SERVES AREAS OF THE BUILDING OUTSIDE THE WORK AREA SHALL REMAIN OPERATIONAL THROUGHOUT CONSTRUCTION. TEMPORARY PROTECTION SHALL BE PROVIDED IN ACCORDANCE WITH NFPA 241, CONSTRUCTION, ALTERATION, AND DEMOLITION OPERATIONS.

15. FIRE ALARM NOTE:

1. CIRCUITS AND DEVICES THAT ARE OUTSIDE THE CONSTRUCTION AREA SHALL BE MAINTAINED OPERATIONAL THROUGHOUT CONSTRUCTION AND SHALL BE RE–CIRCUITED AS NECESSARY.
2. INTERIM LIFE SAFETY MEASURES IN THE CONSTRUCTION AREA:
   a. PROVIDE ONE HEAT DETECTOR FOR EACH 2,500 SQUARE FEET IN THE CONSTRUCTION AREA.
   b. PROVIDE A MANUAL PULL STATION AT EACH CONSTRUCTION AREA ENTRANCE.
   c. PROVIDE A SPEAKER/STROBE AT EACH EXIT FROM THE CONSTRUCTION AREA.
   d. PROTECT ALL TEMPORARY FIRE ALARM DEVICES THROUGHOUT CONSTRUCTION.

16. INTERIM LIFE SAFETY:
ALL LIFE SAFETY FEATURES OF THE BUILDING MUST BE MAINTAINED DURING CONSTRUCTION. INTERIM LIFE SAFETY WILL BE IMPLEMENTED WITH THE CONSTRUCTION OF THE HOSPITAL AT ANY POINT AT WHICH THE LIFE SAFETY FEATURES OF THE BUILDING ARE IMPAIRED IN ANY WAY. THIS INCLUDES :
   a. DISRUPTION OF FIRE ALARM OR FIRE SUPPRESSION SYSTEM.
   b. INTERRUPTION OF A PATH OF EGRESS.
   c. WORK AFFECTING ANY RATING ASSEMBLIES TO REMAIN INCLUDING SMOKE BARRIERS , FIRE BARRIERS AND FIRE WALLS.

17. REFER TO SPECIFICATION SECTION 01 00 00 FOR ICRA PERMIT DEFINING ICRA TYPES AND CLASSES.

WORK AREA 1
INFECTION CONTROL RISK ASSESSMENT
TYPE D, CLASS III.

WORK AREA 2
INFECTION CONTROL RISK ASSESSMENT
TYPE D, CLASS III.

WORK AREA 3
INFECTION CONTROL RISK ASSESSMENT
TYPE D, CLASS III.

WORK AREA 4
INFECTION CONTROL RISK ASSESSMENT
TYPE C, CLASS III.

WORK AREA 5
INFECTION CONTROL RISK ASSESSMENT
TYPE C, CLASS III.

WORK AREA 6
INFECTION CONTROL RISK ASSESSMENT
TYPE B, CLASS II.

WORK AREA 7
INFECTION CONTROL RISK ASSESSMENT
TYPE C, CLASS III.

WORK AREA 8
INFECTION CONTROL RISK ASSESSMENT
TYPE C, CLASS II.

ICRA BARRIER TYPES AND KEYED NOTES #

1. INDICATES CONSTRUCTION FENCE WITH GATE
2. PROVIDE ACCESS GATE W/ LOCK
3. TEMPORARY ICRA BARRIER. PROVIDE HEAVY DUTY POLY ON STUD CONSTRUCTION SEALED TIGHT AT FLOOR, CEILING AND SEAMS. PROVIDE ZIP DOOR TO ACCESS ENCLOSED WORK AREA.
4. PROVIDE PLASTIC SHEETING AT EXISTING DOOR OPENINGS SEALED TIGHT AT FLOOR AND DOOR FRAME.
5. NEW METAL STUD AND GWB ICRA AS BARRIER. PROVIDE DRYWALL 2 SIDES OF STUD AND EXTEND AND SEAL TO METAL DECK IN ORDER TO PREVENT DUST MIGRATION TO OCCUPIED AREAS. SEAL TO FLOOR AND ALL SEAMS AND DRYWALL JOINTS.
6. EXISTING PARTITION TO SERVE ICRA BARRIER. PROVIDE NEW PLASTIC SHEETING AT TOP PARTITION TO UNDERSIDE OF METAL DECK IN ORDER TO SEAL AGAINST DUST MIGRATION
7. PROVIDE ANTE ROOM WHERE SHOWN ON PLAN
8. FIRE COMMEND CENTER MUST BE ACCESSIBLE AT ALL TIMES REGARDLESS OF CONSTRUCTION ACTIVITIES
9. PROVIDE TEMPORARY DUST BARRIER FOR WORK THIS AREA. CONSTRUCT HEAVY DUTY POLY ON ZIP POLES AS NEEDED TO CONTROL DUST MIGRATION INTO EXISTING CORRIDOR OR OCCUPIED SPACES. ANY EXTENT PERIOD OF CORRIDOR SHUT DOWN MUST BE COORDINATED WITH THE HOSPITAL. REFER TO DETAIL 2/EST01 FOR EXTENT OF TEL/ COM AND DATA WORK AND ICRA.
10. MAINTAIN PATH OF EGRESS AT ALL TIMES
11. MAINTAIN PATH OF EGRESS AT ALL TIMES

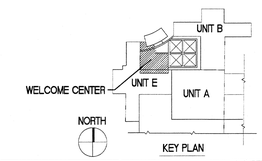

Revisions	Date
ISSUE 1 - ISSUE FOR CONSTRUCTION	04.30.2013
95 % SUBMISSION	02.17.2012
75 % SUBMISSION	03.16.2011
25 % SUBMISSION	10.29.2010

CONSULTANTS:

DISTRICT OF COLUMBIA JOHN L. CARELLI No. 100157 REGISTERED ARCHITECT

ARCHITECT/ENGINEERS:

EWING COLE
1025 Connecticut Avenue, NW
Suite 900
Washington, DC 20036-5405
Tel: 202-467-1500 Fax: 202-296-8950

Drawing Title: ICRA PLAN - SECOND AND THIRD FLOOR PLAN

Approved Project Director

Project Title: OIF / OEF WELCOME CENTER DEPARTMENT OF VETERANS AFFAIRS VAMC

Location: Veterans Affairs Medical Center, 50 Irving Street NW Washington DC

Date: 4-30-2013 | Checked: CH | Drawn: AN

Project Number: 688-334 OIF/OEF

Building Number

Drawing Number: AD100.1 --

Office of Construction and Facilities Management

Department of Veterans Affairs

VA FORM 08-6231

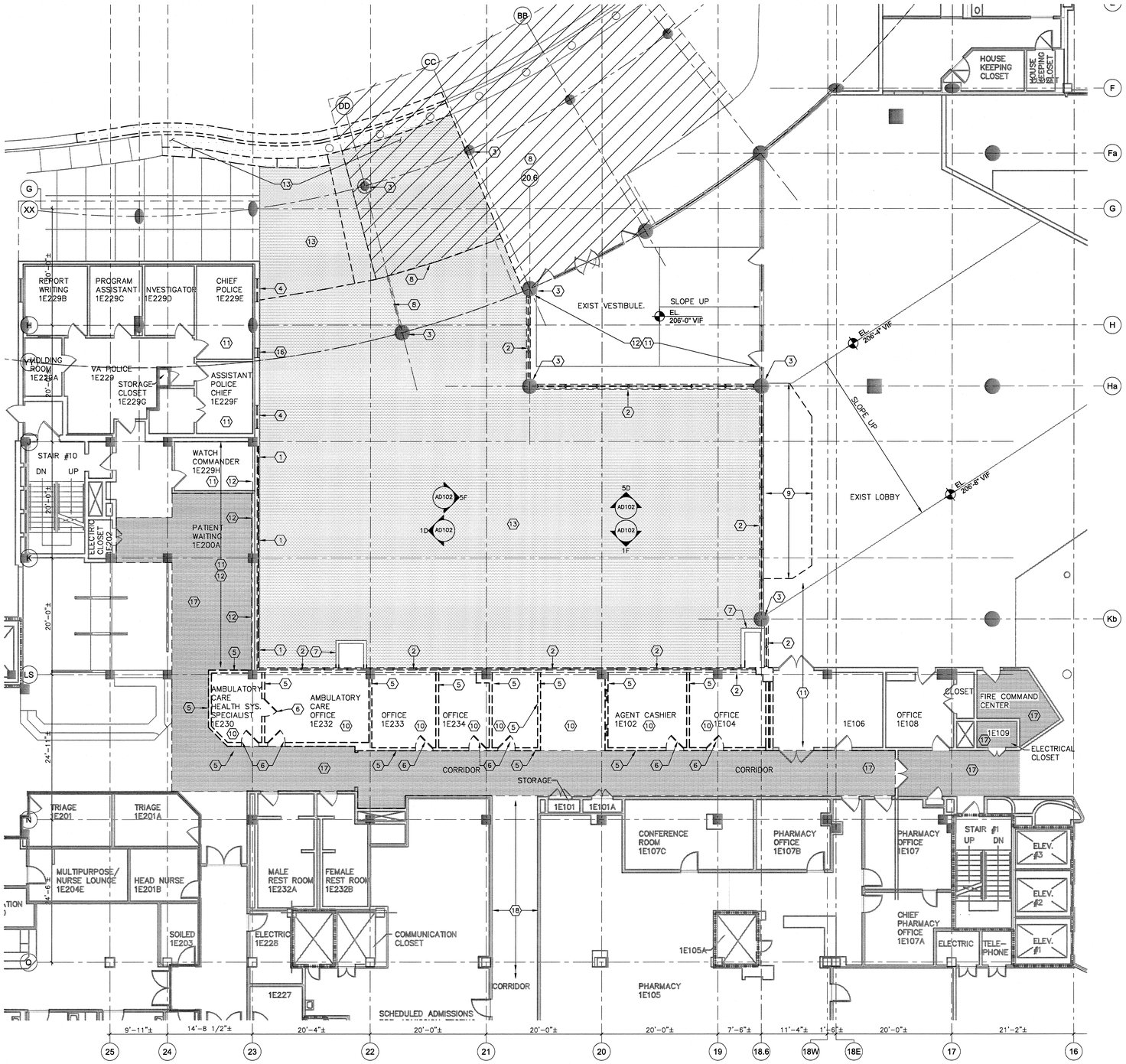

DEMOLITION NOTES THIS SHEET (#)

REFER TO G1002 FOR GENERAL DEMOLITION AND ALTERATION NOTES

1. ALUMINUM CURTAIN WALL / WINDOW SYSTEM TO BE REMOVED. MASONRY SILL, WALL CONSTRUCTION, AND STRUCTURE ABOVE CURTAIN WALL/ WINDOW SYSTEM IS TO REMAIN.
2. ALUMINUM CURTAIN WALL SYSTEM AND MASONRY WALL BELOW TO BE REMOVED. EXISTING SOFFIT TO REMAIN IN PLACE.
3. PROTECT EXISTING COLUMN AND COLUMN FINISHES FOR EXTENT OF WORK.
4. REMOVE EXISTING WINDOW.
5. REMOVE PARTITION ENTIRELY TO UNDER SIDE OF SLAB. ADJACENT CEILING GRID TO REMAIN TYP
6. REMOVE REMOVE DOOR, FRAME AND ASSOCIATED HARDWARE COMPLETELY TYP.
7. REMOVE AREA WAY COVER. CONC CURB AND AREAWAY TO REMAIN.
8. INDICATES EXISTING CANOPY TO REMAIN. PROTECT FOR DURATION OF WORK. PROVIDE PHOTOGRAPHS AND A WRITTEN REPORT DOCUMENTING STATE OF CANOPY PRIOR TO START OF WORK.
9. REMOVE FLOOR FINISH, SUBSTRATE AND STRUCTURE DOWN TO BOTTOM OF PLANTER. REFER TO STRUCTURAL DRAWINGS FOR FLOOR INFILL. WAY FINDING SYSTEM TO BE RELOCATED
10. REMOVE FLOOR FINISH/BASE, CEILING GRID AND TILES, LIGHT FIXTURES AND HVAC DIFFUSERS; PREPARE FOR NEW CONSTRUCTION
11. EXISTING FINISHES TO REMAIN; PATCH/ MODIFY AS REQUIRED
12. EXISTING FAN COIL UNIT TO REMAIN
13. INDICATES APPROXIMATE AREA OF SITE CLEARING AND SITE DEMOLITION FOR CONSTRUCTION OF NEW BUILDING.
14. REMOVE CW SYSTEM TO UNDER SIDE OF EXISTING SOFFIT
15. SAW CUT WINDOW SILL TO ACCOMMODATE NEW WALL CONSTRUCTION
16. REMOVE EXISTING EXHAUST / LOUVER AND ASSOCIATED DUCTWORK AS INDICATED ON MECHANICAL DRAWINGS.
17. INDICATES APPROXIMATE AREA OF CEILING, CEILING GRID, LIGHTS, DIFFUSERS, SPRINKLER HEADS, FIRE ALARM DETECTORS AND STROBES, EXIT LIGHTS, ETC. THAT ARE TO BE REMOVED FOR NEW WORK. REPLACE W/ NEW TO MATCH EXISTING. REFER TO MEP DRAWINGS FOR FURTHER INFORMATION. NOTE PAINT ALL WALLS AND DOORS TO REMAIN FROM CORNER TO CORNER TO MATCH EXISTING.
18. INDICATES EXISTING CEILING TILES TO BE REMOVED FOR CATV, SECURITY, AND ELECTRICAL WORK. REPLACE DAMAGED TILES TO MATCH EXISTING. NOTE EXTENT OF WORK IS SHOWN ON 2/ESTO1.

NOTE:

PROVIDE REPORT TO CONTRACTING OFFICER 14 CALENDAR DAYS PRIOR TO STARTING DEMOLITION DOCUMENTING THE EXISTING CONDITIONS OF WORK IN PLACE TO REMAIN THAT IS ADJACENT TO WORK TO BE DEMOLISHED. REPORT SHOULD INCLUDE NARRATIVES AND PHOTOGRAPHS DESCRIBING THE STATE OF THE WORK TO REMAIN IN PLACE.

(1F) DEMOLITION PLAN– FIRST FLOOR

SCALE: 1/8" = 1'-0"

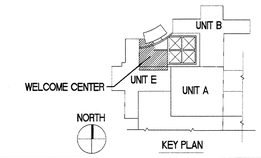

Revisions	Date
ISSUE 1 - ISSUE FOR CONSTRUCTION	04.30.2013
95 % SUBMISSION	02.17.2012
75 % SUBMISSION	03.16.2011
25 % SUBMISSION	10.29.2010

CONSULTANTS:

DISTRICT OF COLUMBIA JOHN L. CAPRELLI No. 4267 REGISTERED ARCHITECT

ARCHITECT/ENGINEERS:

EWING COLE
1025 Connecticut Avenue, NW
Suite 900
Washington, DC 20036-5405
Tel: 202-467-1500 Fax: 202-296-8950

Drawing Title: DEMOLITION PLAN - FIRST FLOOR

Approved Project Director:

Project Title: OIF / OEF WELCOME CENTER DEPARTMENT OF VETERANS AFFAIRS VAMC

Location: Veterans Affairs Medical Center, 50 Irving Street NW Washington DC

Date: 4-30-2013 | Checked: CH | Drawn: AN

Project Number: 688-334 OIF/OEF

Building Number:

Drawing Number: AD101 --

Office of Construction and Facilities Management

Department of Veterans Affairs

VA FORM 08-6231

DEMOLITION NOTES THIS SHEET (#)

1. ALUMINUM CURTAIN WALL / WINDOW SYSTEM TO BE REMOVED. MASONRY SILL, WALL CONSTRUCTION, AND STRUCTURE ABOVE CURTAIN WALL/ WINDOW SYSTEM IS TO REMAIN.
2. ALUMINUM CURTAIN WALL SYSTEM AND MASONRY WALL BELOW.
3. REMOVE EXISTING WINDOW.
4. REMOVE EXISTING EXHAUST/ LOUVER AND ASSOCIATED DUCTWORK AS INDICATED ON MECHANICAL DRAWINGS FOR FURTHER INFORMATION.
5. EXISTING EIFS SOFFIT TO REMAIN
6. EXISTING CONC COLUMN TO REMAIN. PROTECT COLUMN AND FINISHES FOR DURATION OF WORK.
7. SAW CUT WINDOW SILL TO ACCOMMODATE NEW WALL CONSTRUCTION
8. REMOVE FLOOR FINISH, SUBSTRATE AND STRUCTURE DOWN TO BOTTOM OF PLANTER. REFER TO STRUCTURAL DRAWINGS FOR FLOOR INFILL. WAY FINDING SYSTEM TO BE RELOCATED

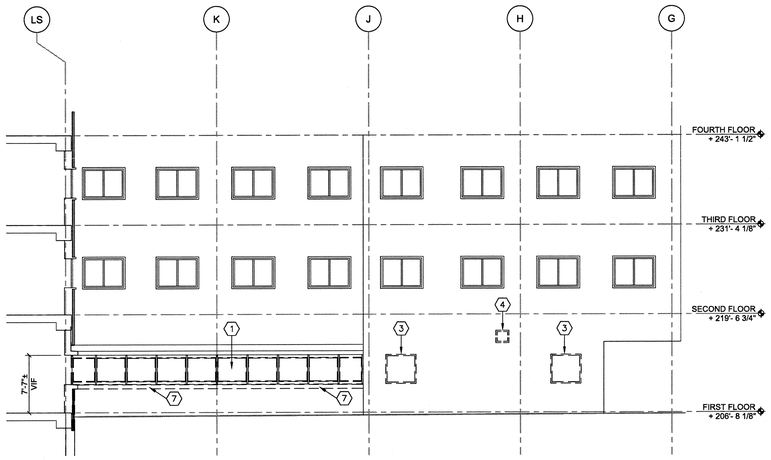

1D DEMOLITION ELEVATION
SCALE: 1/8" = 1'-0"

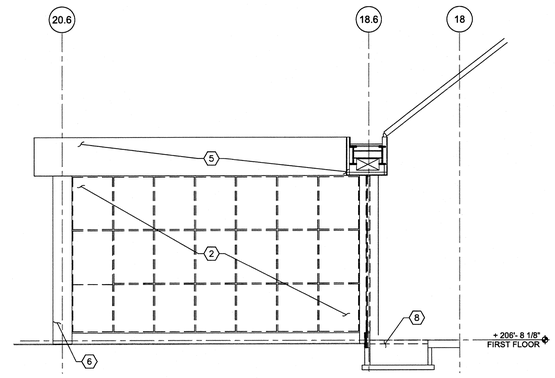

5D DEMOLITION ELEVATION
SCALE: 1/8" = 1'-0"

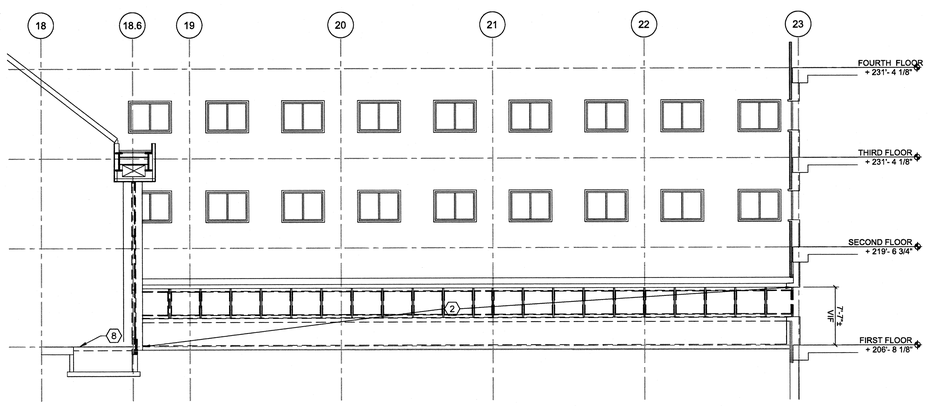

1F DEMOLITION ELEVATION
SCALE: 1/8" = 1'-0"

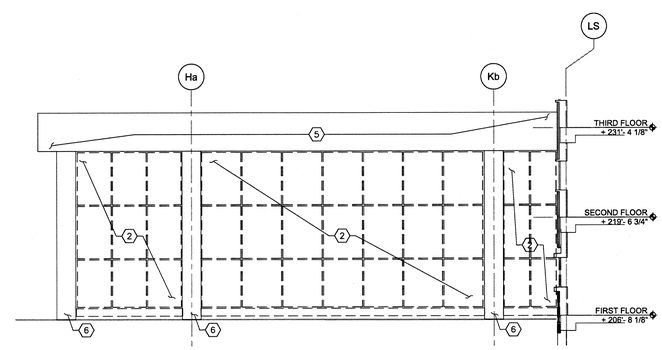

5F DEMOLITION ELEVATION
SCALE: 1/8" = 1'-0"

Revisions	Date
ISSUE 1 - ISSUE FOR CONSTRUCTION	04.30.2013
95 % SUBMISSION	02.17.2012
75 % SUBMISSION	03.16.2011
25 % SUBMISSION	10.29.2010

CONSULTANTS:

DISTRICT OF COLUMBIA JOHN L. CAPELLI No. 1[illegible]57 REGISTERED ARCHITECT

ARCHITECT/ENGINEERS:

EWING COLE
1025 Connecticut Avenue, NW
Suite 900
Washington, DC 20036-5405
Tel: 202-467-1500 Fax: 202-296-8950

Drawing Title: DEMOLITION WALL SECTIONS AND ELEVATIONS

Approved Project Director

Project Title: OIF / OEF WELCOME CENTER DEPARTMENT OF VETERANS AFFAIRS VAMC

Location: Veterans Affairs Medical Center, 50 Irving Street NW Washington DC

Date: 4-30-2013 | Checked: CH | Drawn: AN

Project Number: 688-334 OIF/OEF

Building Number:

Drawing Number: AD102

Office of Construction and Facilities Management

Department of Veterans Affairs

VA FORM 08-6231

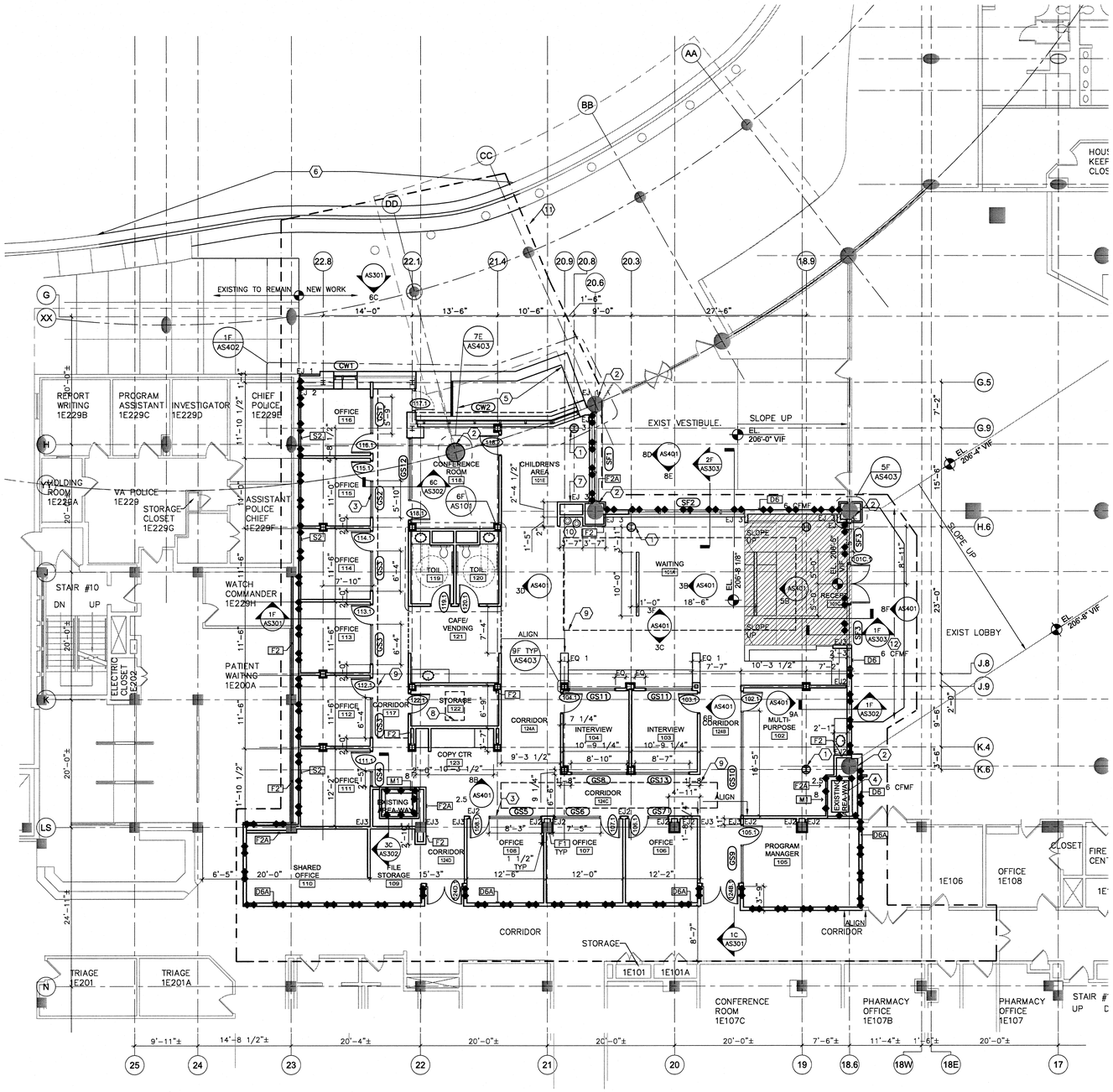

1F FLOOR PLAN
SCALE: 1/8" = 1'-0"

GENERAL NOTES

1. ALL WALL PARTITIONS TO BE D4A UNO
2. EXTEND WALL PARTITION F2A TO UNDER SIDE OF DECK
3. REFER TO EXPANSION JOINT DETAILS ON SHEET AS505
4. INDICATES AREA OF SLAB DEPRESSION. ELEVATION TO MATCH HEIGHT OF THRESHOLD AT DOOR 101C.1. PRIOR TO PRODUCTION OF CONCRETE SHOP DRAWINGS THE ELEVATION OF THRESHOLD AT DOOR 101C.1 IS TO BE FIELD VERIFIED. CONVEY ELEVATIONS TO ARCHITECT FOR REVIEW.
5. THROUGHOUT THE DRAWINGS ELEVATION 0'-0" REPRESENTS THE FIRST FLOOR OF THE WELCOME CENTER ADDITION. ON THE CIVIL DRAWINGS THIS IS REPRESENTED AS ELEVATION 206.67'. (206'-8 1/8"). THE INTENTION IS THAT THE FIRST FLOOR OF THE WELCOME CENTER ALIGNS WITH THE FIRST FLOOR OF THE EXISTING VA HOSPITAL. SEE NOTE BELOW IN REGARDS TO WHEN THE TWO BUILDINGS MEET.
6. THE FLOOR ELEVATIONS SHOWN AT THE EXISTING BUILDINGS HAVE BEEN OBTAINED THROUGH SURVEY AND REVIEW OF EXISTING DRAWINGS. AT ALL INSTANCES WHERE NEW CONSTRUCTION IS TO MEET EXISTING CONSTRUCTION THE CONTRACTOR SHALL "SHOOT" AND SURVEY THE EXISTING FLOOR TO DETERMINE ITS EXACT ELEVATION WHERE THE TWO MEET. THIS INFORMATION IS TO BE PROVIDED TO THE ARCHITECT FOR REVIEW PRIOR TO CONSTRUCTION.

LEGEND

114.1 DOOR TAG REFER TO DOOR SCHEDULE SHEET AS602

CW2 WINDOW TAG REFER TO WINDOW SCHEDULE SHEET AS603

F2 PARTITION TAG REFER TO SHEET AS601

EJ # EXPANSION JOINT TYPE REFER TO SHEET AS505

KEYED NOTES THIS SHEET #

1. METAL COLUMN ENCLOSURE REFER TO 7F/AS403
2. EXISTING CONC COLUMN TO REMAIN
3. INTERIOR GLAZING SYSTEM REFER TO FG/AS602 AND DOOR SCHEDULE TYP.
4. AREA WAY EXTENDS TO UNDERSIDE OF ROOF SLAB
5. WATER FOUNTAIN
6. REFER TO CIVIL DRAWINGS FOR EXTENT OF SITE WORK
7. PROVIDE 30"X30 ACCESS PANEL 18" AFF
8. ROOF SCUTTLE ABOVE
9. COVE LIGHT ABOVE
10. PROVIDE MOLD RESISTANCE GWB AT WATER FOUNTAIN AREA
11. INDICATES APPROXIMATE EXTENT OF AREA OF SCOPE OF WORK FOR ARCHITECTURAL FINISHES WITHIN THE EXISTING BUILDINGS
12. EXTENT OF STRUCTURAL INFILL . REFER TO STRUCTURAL DRAWINGS FOR ASSEMBLY AND INTERIOR FINISH DRAWINGS FOR FLOOR FINISH

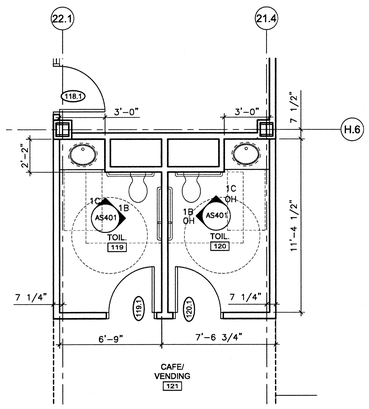

6F ENLARGED FLOOR PLAN
SCALE: 1/4" = 1'-0"

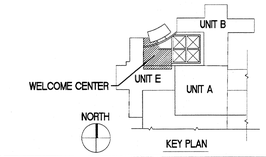

Revisions	Date
ISSUE 1 - ISSUE FOR CONSTRUCTION	04.30.2013
95 % SUBMISSION	02.17.2012
75 % SUBMISSION	03.16.2011
25 % SUBMISSION	10.29.2010

CONSULTANTS:

DISTRICT OF COLUMBIA JOHN L. CAPELLA No. 10157 REGISTERED ARCHITECT

ARCHITECT/ENGINEERS:

EWING COLE
1025 Connecticut Avenue, NW
Suite 900
Washington, DC 20036-5405
Tel: 202-467-1500 Fax: 202-296-8950

Drawing Title: FLOOR PLAN - FIRST FLOOR

Approved Project Director:

Project Title: OIF / OEF WELCOME CENTER
DEPARTMENT OF VETERANS AFFAIRS
VAMC

Location: Veterans Affairs Medical Center
50 Irving Street NW Washington DC

Date: 4-30-2013 | Checked: CH | Drawn: AN

Project Number: 688-334 OIF/OEF

Building Number:

Drawing Number: AS101
--

Office of Construction and Facilities Management

Department of Veterans Affairs

VA FORM 08-6231

GENERAL NOTES:

1. PROVIDE MINIMUM R VALUE OF 25 FOR ROOF INSTALLATION. REFER TO DET 6F/AS505 FOR TYPICAL ROOF ASSEMBLY.
2. TAPERED INSULATION TO SLOPE 1/4" PER 1'-0" MINIMUM
3. INDICATES ROOF CRICKET SLOPE 1/2" PER 1'-0" MINIMUM
4. DRAWING 6F DIMENSIONS LOCATES ALL ROOF SLOPES, CRICKETS AND ROOF DRAIN LOCATIONS.

KEYED NOTES THIS SHEET (#)

1. 36"X54" ROOF SCUTTLE W/ PREFABRICATED CURB SEE DTL 1F/AS505
2. TYPICAL EXPANSION JOINT DETAIL SEE DTL 3F/AS505
3. TYPICAL ROOF DRAIN SEE DTL 1A/AS505
4. TYPICAL EXPANSION JOINT DETAIL SEE DTL 6F/AS505
5. TYPICAL EXPANSION JOINT TRANSITION DETAIL SEE DTL 7C/AS505

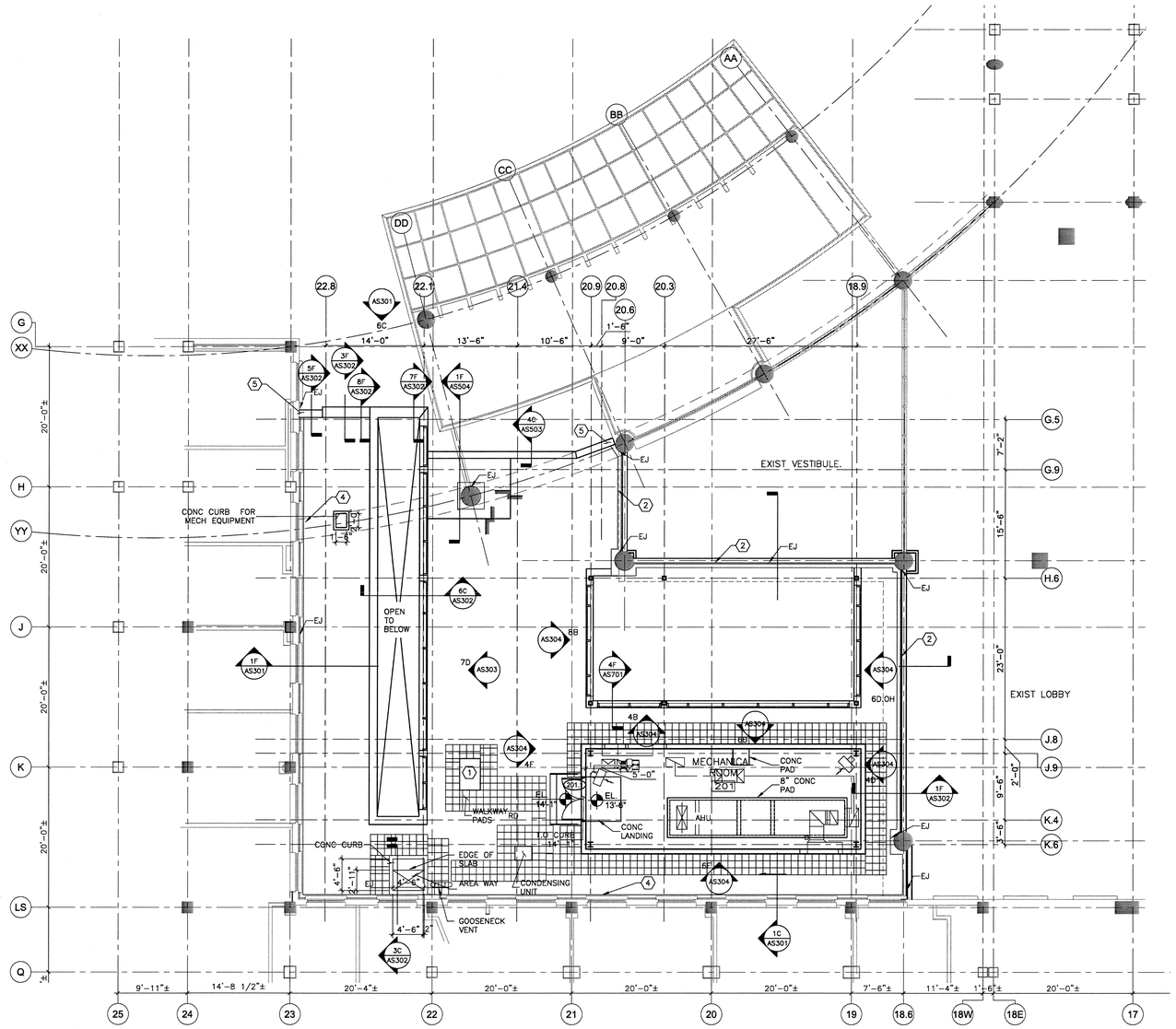

1F PENTHOUSE AND ROOF PLANS
SCALE: 1/8" = 1'-0"

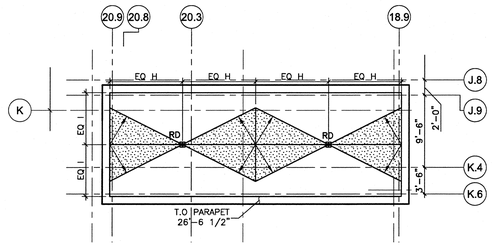

7C MECHANICAL ROOM ROOF PLAN
SCALE: 1/8" = 1'-0"

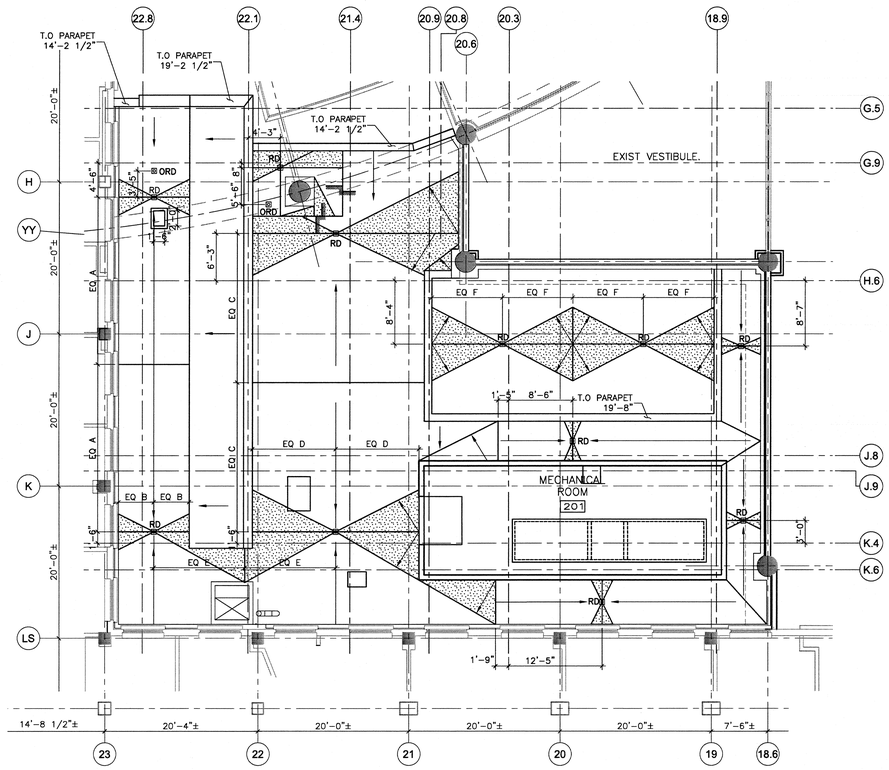

6F ROOF DRAINAGE PLAN
SCALE: 1/8" = 1'-0"

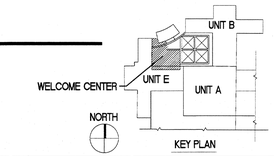

ISSUE 1 - ISSUE FOR CONSTRUCTION	04.30.2013
95 % SUBMISSION	02.17.2012
75 % SUBMISSION	03.16.2011
25 % SUBMISSION	10.29.2010
Revisions	Date

CONSULTANTS:

DISTRICT OF COLUMBIA JOHN L. CAPELLI No. 19557 REGISTERED ARCHITECT

ARCHITECT/ENGINEERS:

EWING COLE
1025 Connecticut Avenue, NW
Suite 900
Washington, DC 20036-5405
Tel: 202-467-1500 Fax: 202-296-8950

Drawing Title: PENTHOUSE AND ROOF PLANS

Approved Project Director

Project Title: OIF / OEF WELCOME CENTER DEPARTMENT OF VETERANS AFFAIRS VAMC

Location: Veterans Affairs Medical Center, 50 Irving Street NW Washington DC

Date	Checked	Drawn
4-30-2013	CH	AN

Project Number: 688-334 OIF/OEF

Building Number:

Drawing Number: AS102

Office of Construction and Facilities Management

Department of Veterans Affairs

VA FORM 08-6231

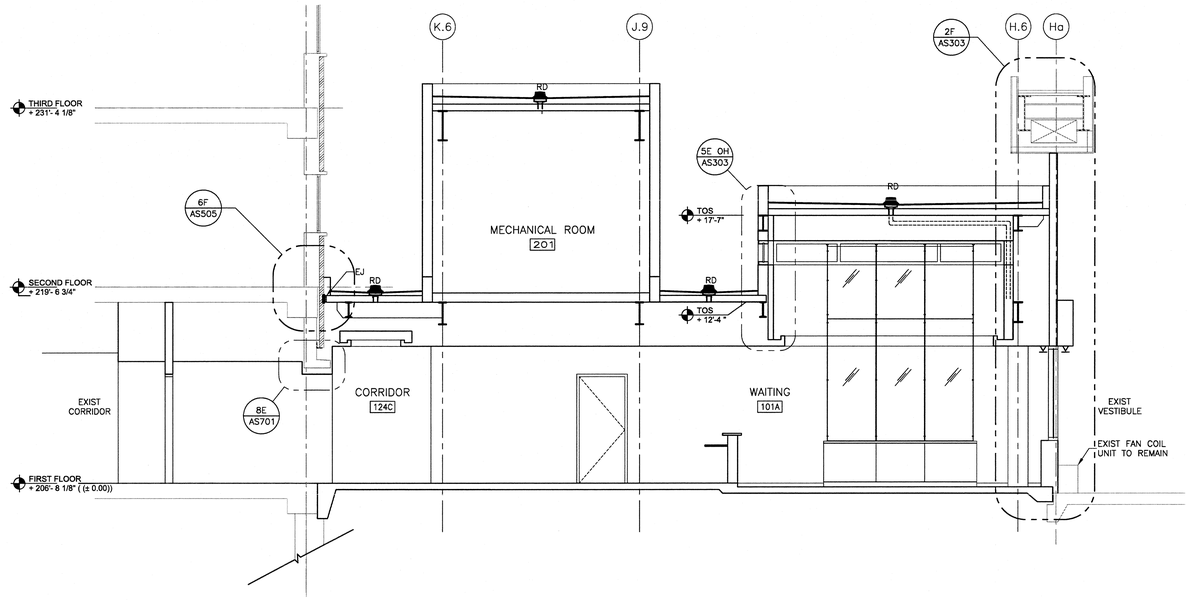

1C BUILDING SECTION
SCALE: 1/4" = 1'-0"

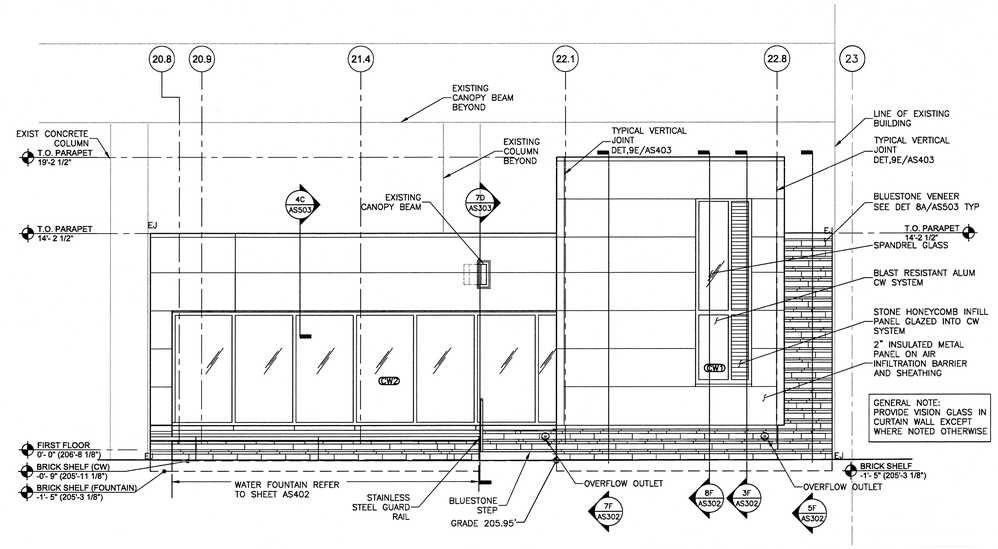

6C BUILDING ELEVATION
SCALE: 1/4" = 1'-0"

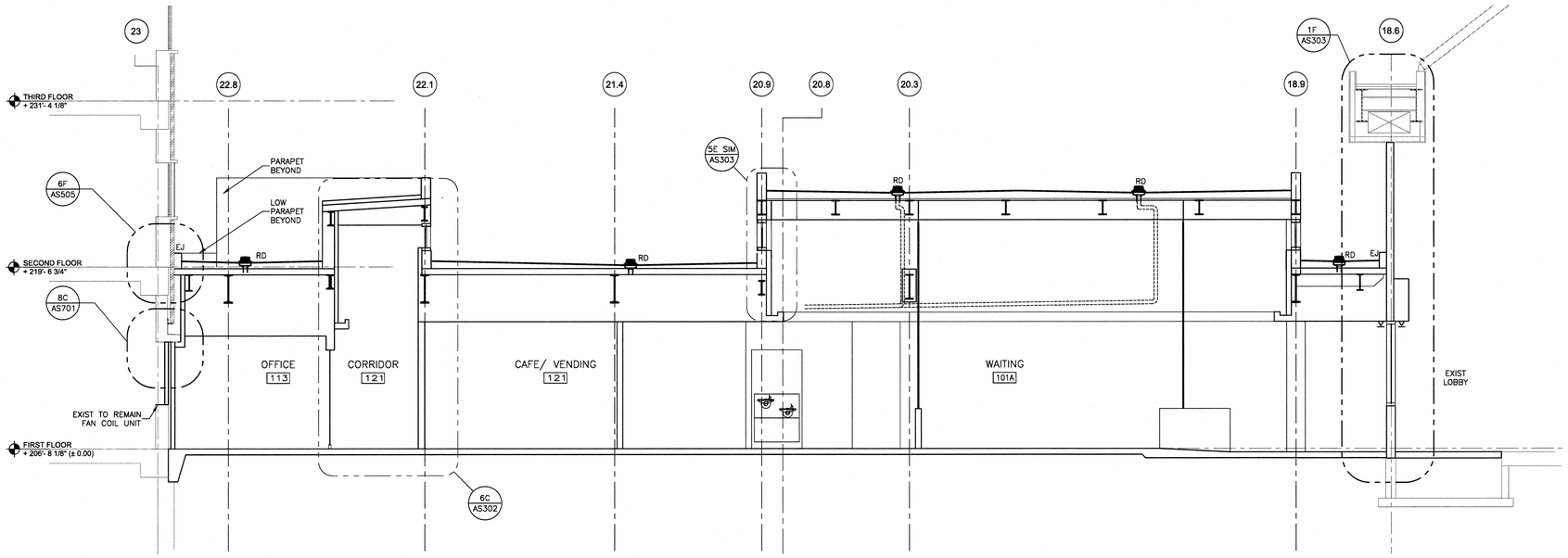

1F BUILDING SECTION
SCALE: 1/4" = 1'-0"

Revisions	Date
ISSUE 1 - ISSUE FOR CONSTRUCTION	04.30.2013
95 % SUBMISSION	02.17.2012
75 % SUBMISSION	03.16.2011
25 % SUBMISSION	10.29.2010

CONSULTANTS:

DISTRICT OF COLUMBIA JOHN L. CAPELLI No. 10557 REGISTERED ARCHITECT

ARCHITECT/ENGINEERS:

EWING COLE
1025 Connecticut Avenue, NW
Suite 900
Washington, DC 20036-5405
Tel: 202-467-1500 Fax: 202-296-8950

Drawing Title: BUILDING SECTIONS AND ELEVATIONS

Approved Project Director

Project Title: OIF / OEF WELCOME CENTER DEPARTMENT OF VETERANS AFFAIRS VAMC

Location: Veterans Affairs Medical Center, 50 Irving Street NW Washington DC

Date: 4-30-2013 | Checked: CH | Drawn: AN

Project Number: 688-334 OIF/OEF

Building Number:

Drawing Number: AS301 --

Office of Construction and Facilities Management

Department of Veterans Affairs

VA FORM 08-6231

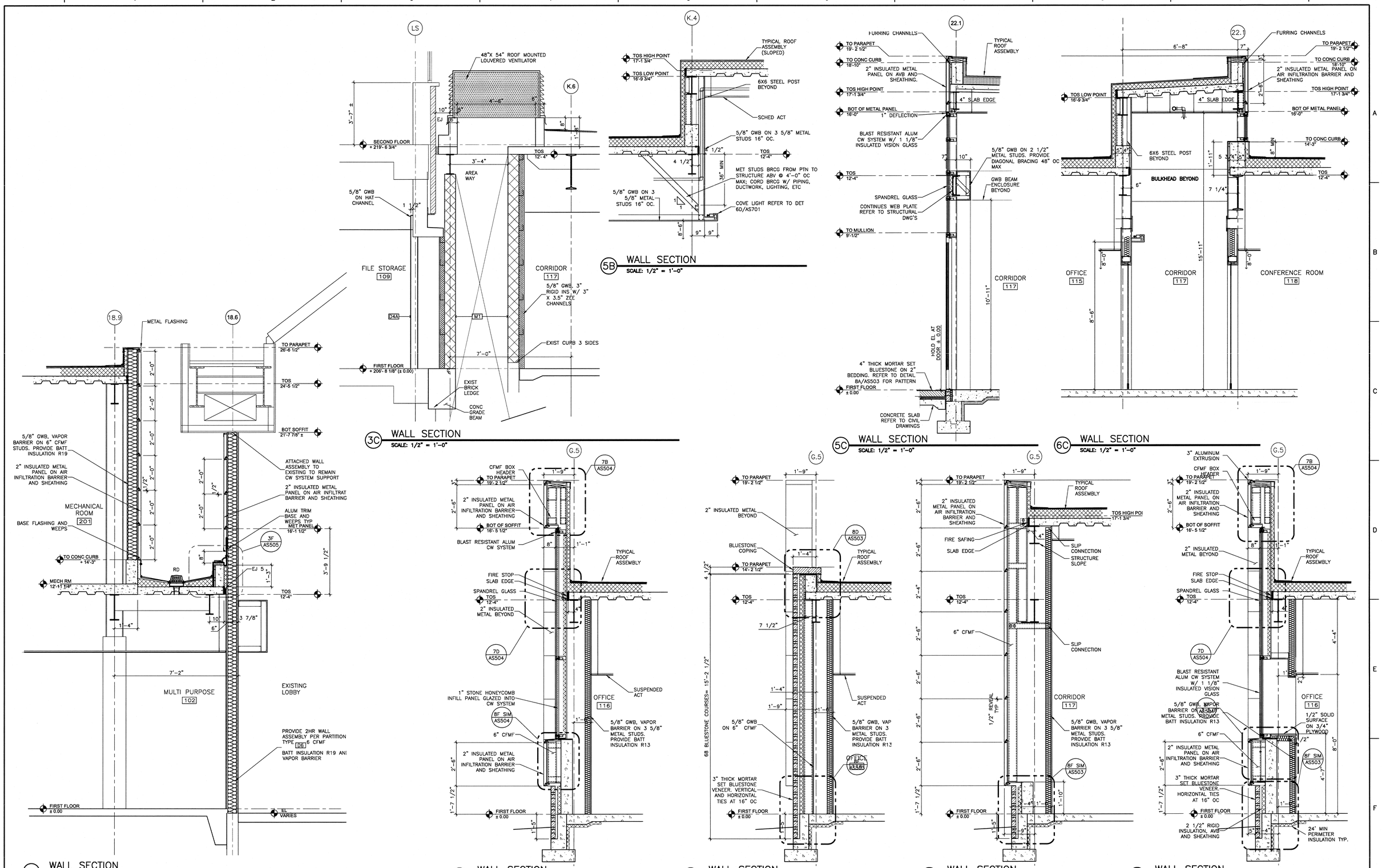

ISSUE 1 - ISSUE FOR CONSTRUCTION	04.30.2013
95 % SUBMISSION	02.17.2012
75 % SUBMISSION	03.16.2011
25 % SUBMISSION	10.29.2010
Revisions	Date

CONSULTANTS:

DISTRICT OF COLUMBIA JOHN L. CAPELLI No. 1557 REGISTERED ARCHITECT

ARCHITECT/ENGINEERS:

EWING COLE
1025 Connecticut Avenue, NW
Suite 900
Washington, DC 20036-5405
Tel: 202-467-1500 Fax: 202-296-8950

Drawing Title: WALL SECTIONS

Approved Project Director

Project Title: OIF / OEF WELCOME CENTER DEPARTMENT OF VETERANS AFFAIRS VAMC

Location: Veterans Affairs Medical Center, 50 Irving Street NW Washington DC

Date: 4-30-2013 | Checked: CH | Drawn: AN

Project Number: 688-334 OIF/OEF

Building Number:

Drawing Number: AS302

Office of Construction and Facilities Management

Department of Veterans Affairs

VA FORM 08-6231