NOTE:
GENERAL CONSTRUCTOR TO VERIFY BOTTOM OF EXISTING CANOPY STRUCTURE PRIOR TO STEEL AND CONCRETE SHOP DRAWINGS SUBMISSIONS.

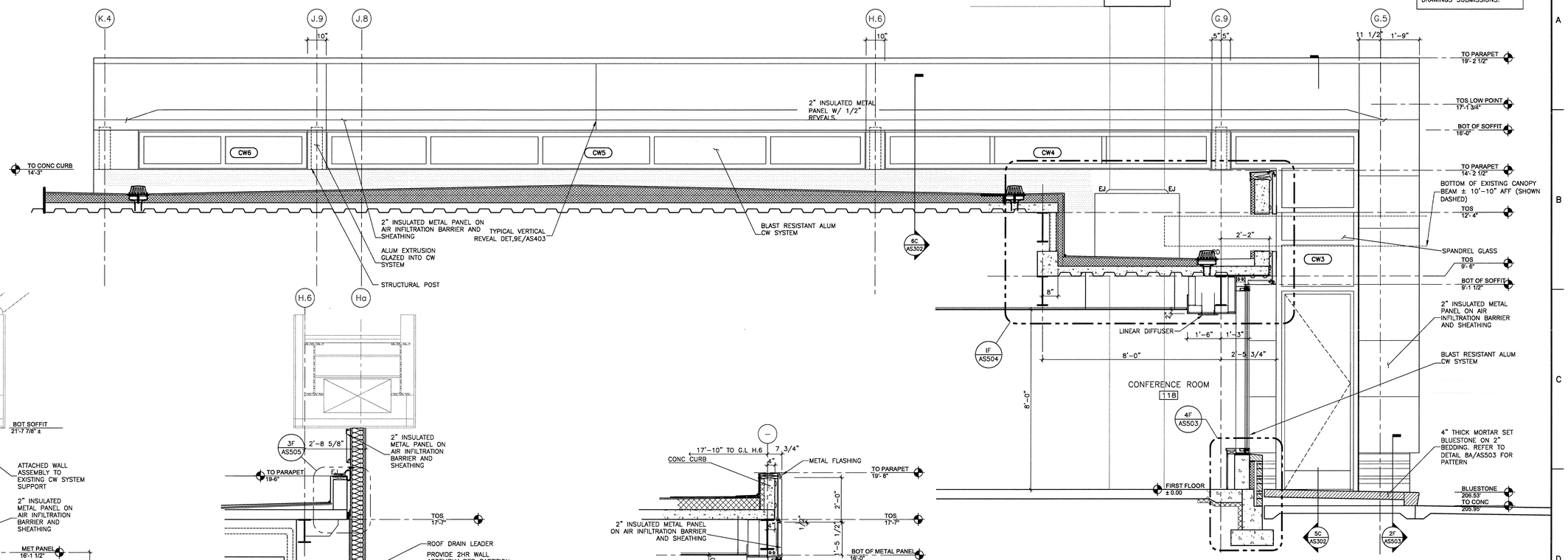

7D WALL SECTION/ ELEVATION
SCALE: 1/2" = 1'-0"

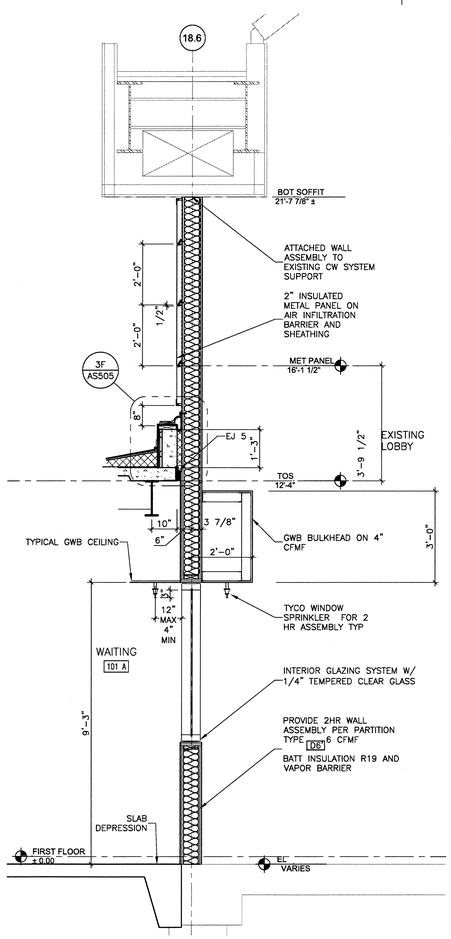

1F WALL SECTION
SCALE: 1/2" = 1'-0"

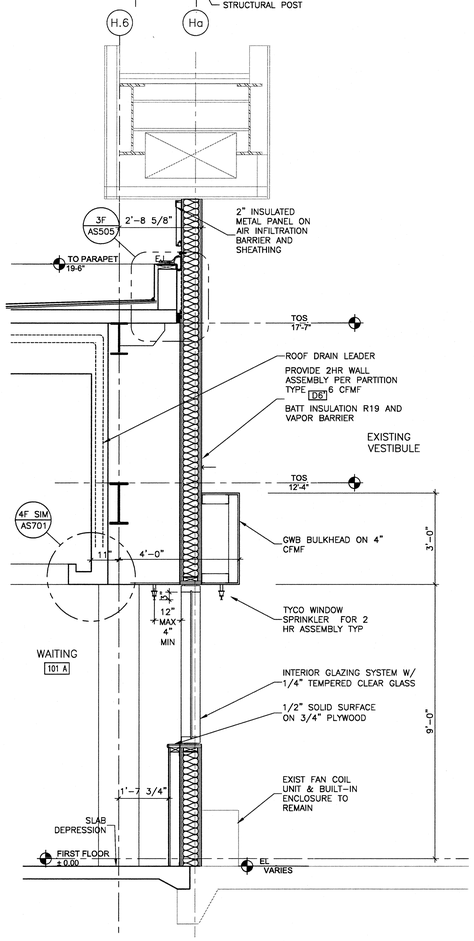

2F WALL SECTION
SCALE: 1/2" = 1'-0"

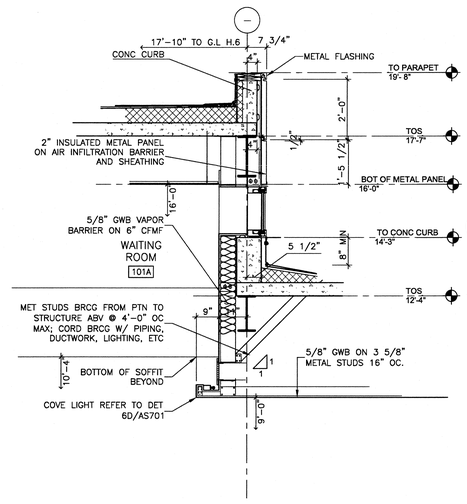

5E PARTIAL WALL SECTION
SCALE: 1/2" = 1'-0"

Revisions	Date
ISSUE 1 - ISSUE FOR CONSTRUCTION	04.30.2013
95 % SUBMISSION	02.17.2012
75 % SUBMISSION	03.16.2011
25 % SUBMISSION	10.29.2010

CONSULTANTS:

DISTRICT OF COLUMBIA JOHN L. CAPELLI No. 21557 REGISTERED ARCHITECT

ARCHITECT/ENGINEERS:

EWING COLE
1025 Connecticut Avenue, NW
Suite 900
Washington, DC 20036-5405
Tel: 202-467-1500 Fax: 202-296-8950

Drawing Title: WALL SECTIONS AND ELEVATIONS

Approved Project Director:

Project Title: OIF / OEF WELCOME CENTER DEPARTMENT OF VETERANS AFFAIRS VAMC

Location: Veterans Affairs Medical Center, 50 Irving Street NW Washington DC

Date: 4-30-2013 | Checked: CH | Drawn: AN

Project Number: 688-334 OIF/OEF

Building Number:

Drawing Number: AS303 --

Office of Construction and Facilities Management

Department of Veterans Affairs

VA FORM 08-6231

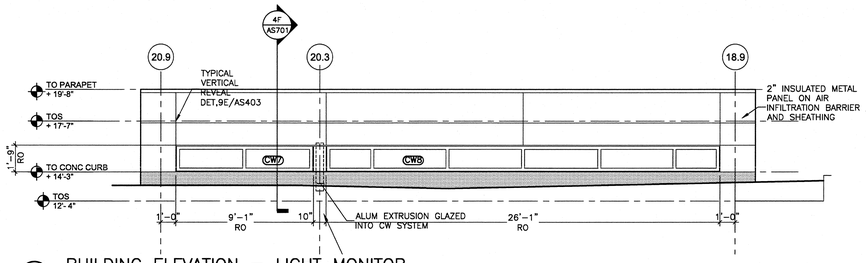

4B BUILDING ELEVATION – LIGHT MONITOR
SCALE: 1/4" = 1'-0"

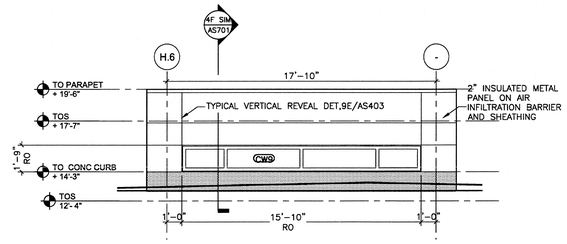

8B BUILDING ELEVATION – LIGHT MONITOR
SCALE: 1/4" = 1'-0"

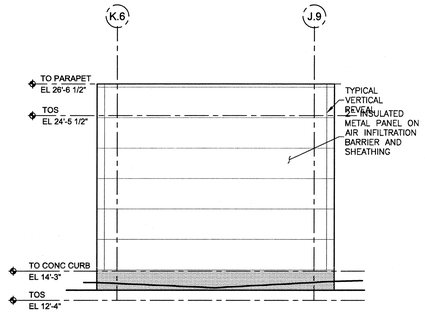

4D BUILDING ELEVATION – PENTHOUSE
SCALE: 1/4" = 1'-0"

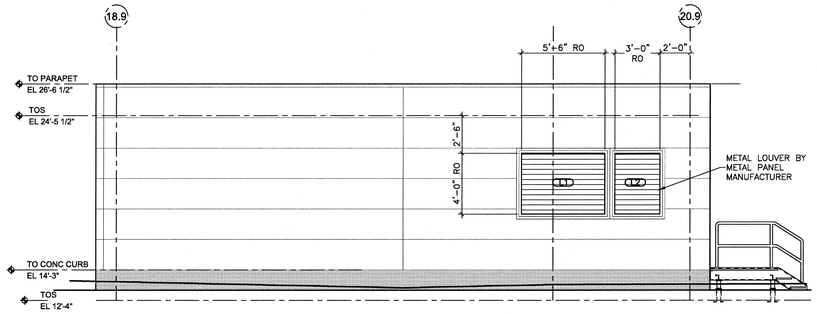

6D BUILDING ELEVATION – PENTHOUSE
SCALE: 1/4" = 1'-0"

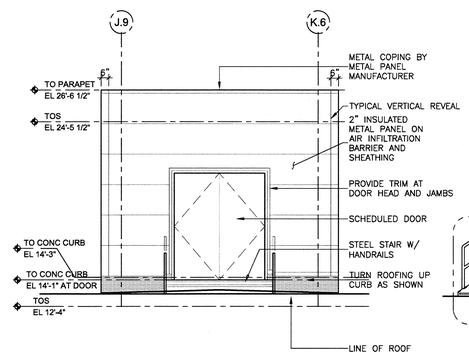

4F BUILDING ELEVATION – PENTHOUSE
SCALE: 1/4" = 1'-0"

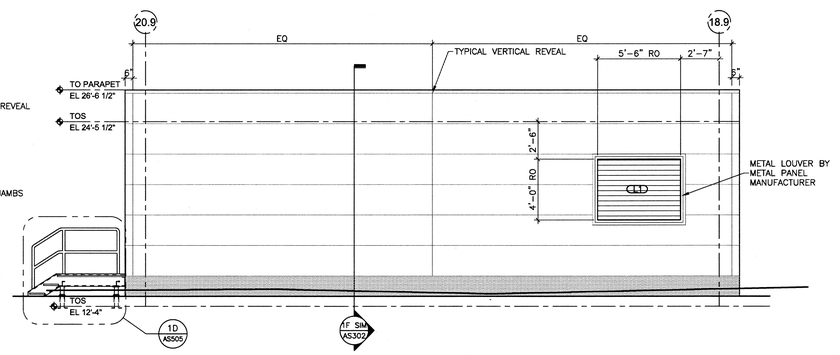

6F BUILDING ELEVATION – PENTHOUSE
SCALE: 1/4" = 1'-0"

Revisions	Date
ISSUE 1 - ISSUE FOR CONSTRUCTION	04.30.2013
95 % SUBMISSION	02.17.2012
75 % SUBMISSION	03.16.2011
25 % SUBMISSION	10.29.2010

CONSULTANTS:

DISTRICT OF COLUMBIA JOHN L. CAPELLI No. 10157 REGISTERED ARCHITECT

ARCHITECT/ENGINEERS:

EWING COLE
1025 Connecticut Avenue, NW
Suite 900
Washington, DC 20036-5405
Tel: 202-467-1500 Fax: 202-296-8950

Drawing Title: BUILDING ELEVATIONS

Approved: Project Director

Project Title: OIF / OEF WELCOME CENTER DEPARTMENT OF VETERANS AFFAIRS VAMC

Location: Veterans Affairs Medical Center, 50 Irving Street NW Washington DC

Date: 4-30-2013 | Checked: - | Drawn: -

Project Number: 688-334 OIF/OEF

Building Number:

Drawing Number: AS304 --

Office of Construction and Facilities Management

Department of Veterans Affairs

VA FORM 08-6231

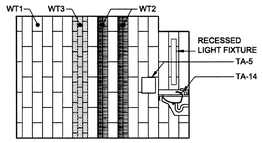

1A INTERIOR ELEVATION – TOILET

SCALE: 1/4" = 1'-0"

NOTE: REFER TO GI005 FOR MOUNTING HEIGHTS AND TA NUMBERS

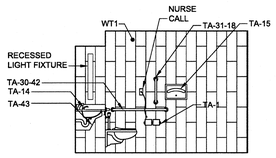

1B INTERIOR ELEVATION – TOILET

SCALE: 1/4" = 1'-0"

NOTE: REFER TO GI005 FOR MOUNTING HEIGHTS AND TA NUMBERS

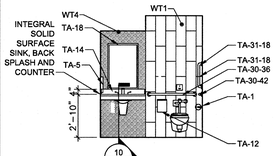

1C INTERIOR ELEVATION – TOILET

SCALE: 1/4" = 1'-0"

NOTE: REFER TO GI005 FOR MOUNTING HEIGHTS AND TA NUMBERS

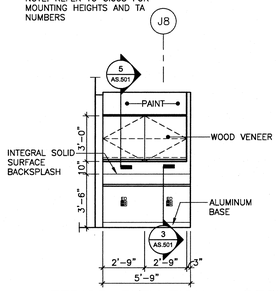

1E INTERIOR ELEVATION – RECEPTION 101C

SCALE: 1/4" = 1'-0"

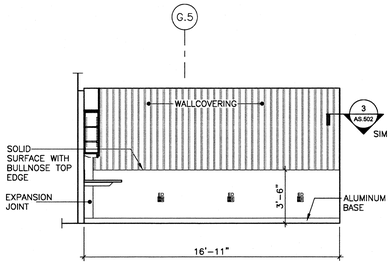

1F INTERIOR ELEVATION – RECEPTION 101C

SCALE: 1/4" = 1'-0"

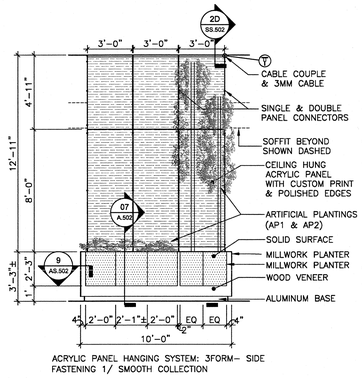

3B INTERIOR ELEVATION – WAITING

SCALE: 1/4" = 1'-0"

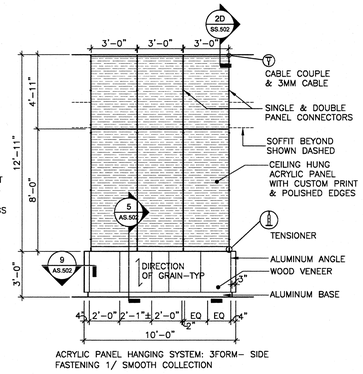

5B INTERIOR ELEVATION – WAITING

SCALE: 1/4" = 1'-0"

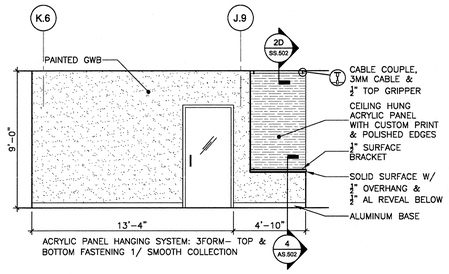

6B INTERIOR ELEVATION – WAITING

SCALE: 1/4" = 1'-0"

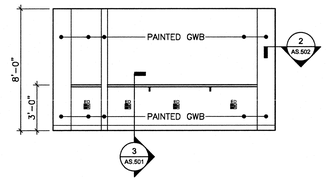

8B INTERIOR ELEVATION– COPY CENTER

SCALE: 1/4" = 1'-0"

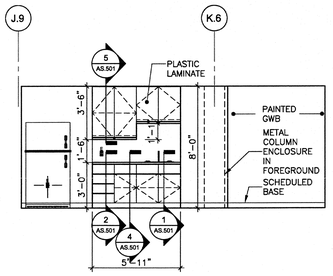

9A INT ELEV– MULTIPURPOSE 102

SCALE: 1/4" = 1'-0"

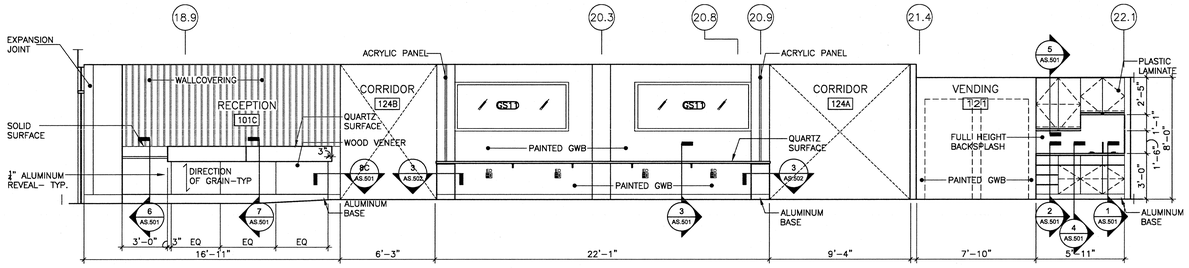

3C INTERIOR ELEVATION – WAITING

SCALE: 1/4" = 1'-0"

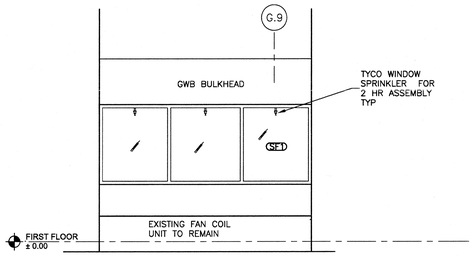

8D INTERIOR ELEVATION– EXISTING VESTIBULE

SCALE: 1/4" = 1'-0"

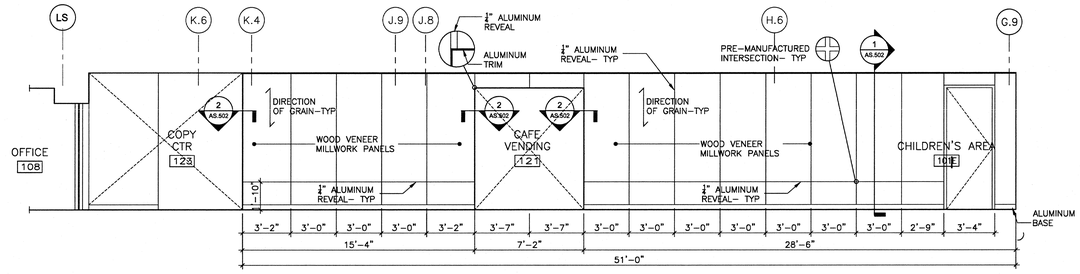

3D INTERIOR ELEVATION – WAITING

SCALE: 1/4" = 1'-0"

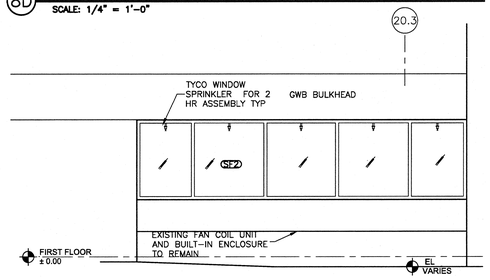

8E INTERIOR ELEVATION– EXISTING VESTIBULE

SCALE: 1/4" = 1'-0"

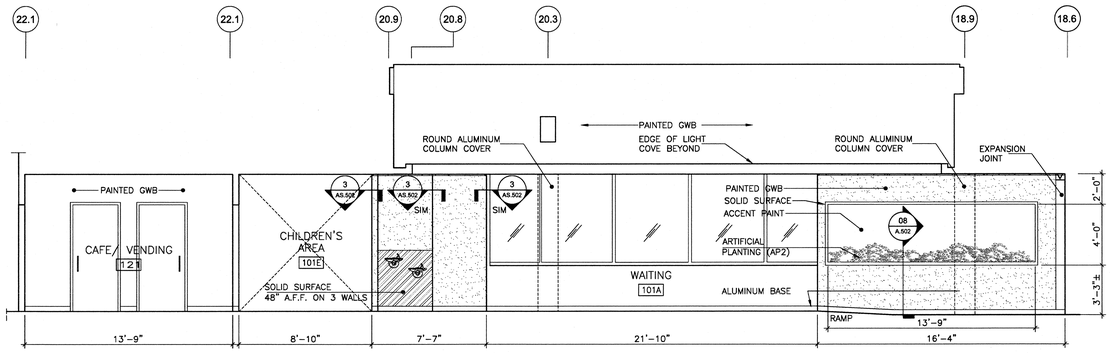

3F INTERIOR ELEVATION – WAITING

SCALE: 1/4" = 1'-0"

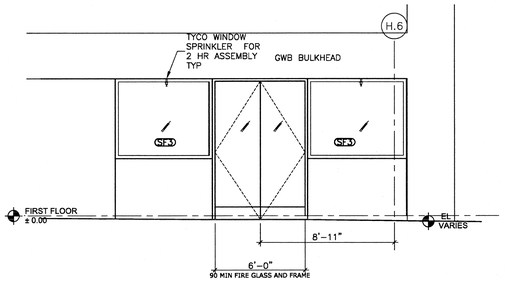

8F INTERIOR ELEVATION– EXISTING LOBBY

SCALE: 1/4" = 1'-0"

Revisions	Date
ISSUE 1 - ISSUE FOR CONSTRUCTION	04.30.2013
95 % SUBMISSION	02.17.2012
75 % SUBMISSION	03.16.2011
25 % SUBMISSION	10.29.2010

CONSULTANTS:

DISTRICT OF COLUMBIA JOHN L. CAPELLI No. 10657 REGISTERED ARCHITECT

ARCHITECT/ENGINEERS:

EWING COLE
1025 Connecticut Avenue, NW
Suite 900
Washington, DC 20036-5405
Tel: 202-467-1500 Fax: 202-296-8950

Drawing Title: INTERIOR ELEVATIONS

Approved: Project Director

Project Title: OIF / OEF WELCOME CENTER DEPARTMENT OF VETERANS AFFAIRS VAMC

Location: Veterans Affairs Medical Center, 50 Irving Street NW Washington DC

Date: 4-30-2013 | Checked: - | Drawn: -

Project Number: 688-334 OIF/OEF

Building Number:

Drawing Number: AS401 --

Office of Construction and Facilities Management

Department of Veterans Affairs

VA FORM 08-6231

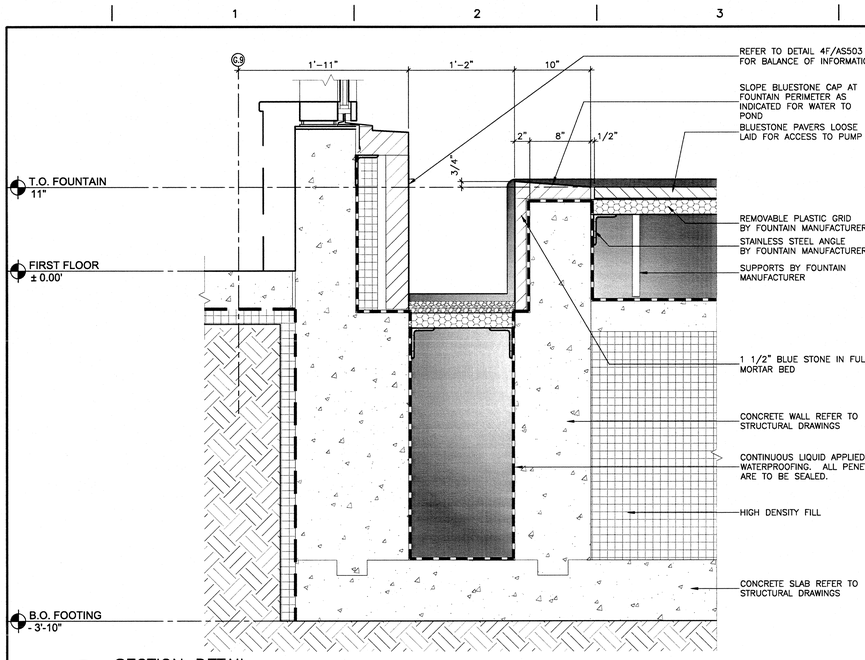

1C SECTION DETAIL
SCALE: 1 1/2" = 1'-0"

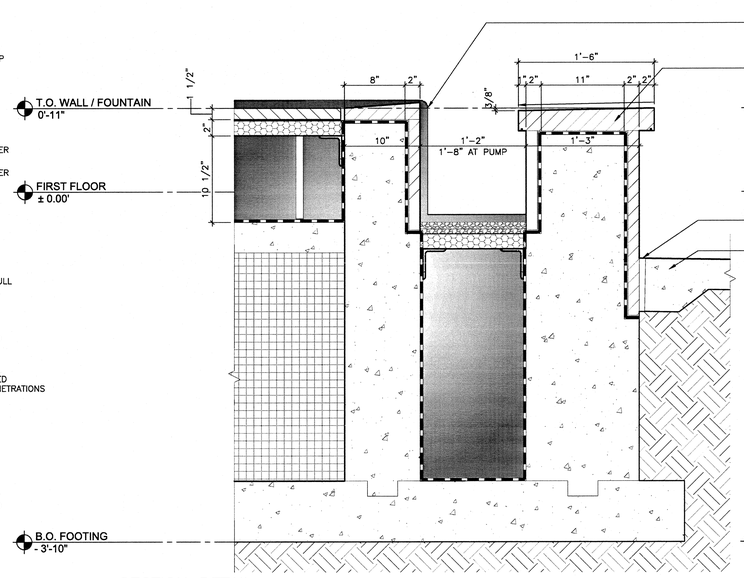

4C SECTION DETAIL
SCALE: 1 1/2" = 1'-0"

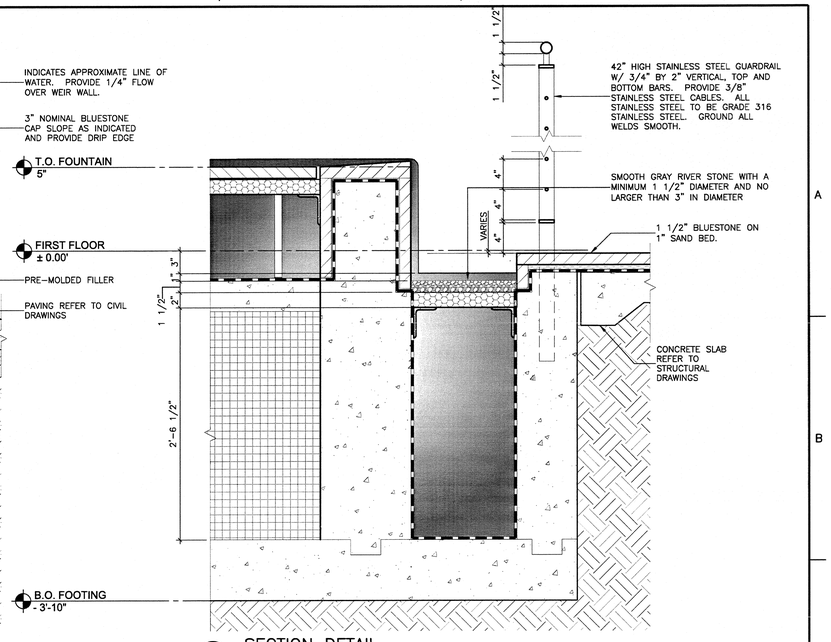

7C SECTION DETAIL
SCALE: 1 1/2" = 1'-0"

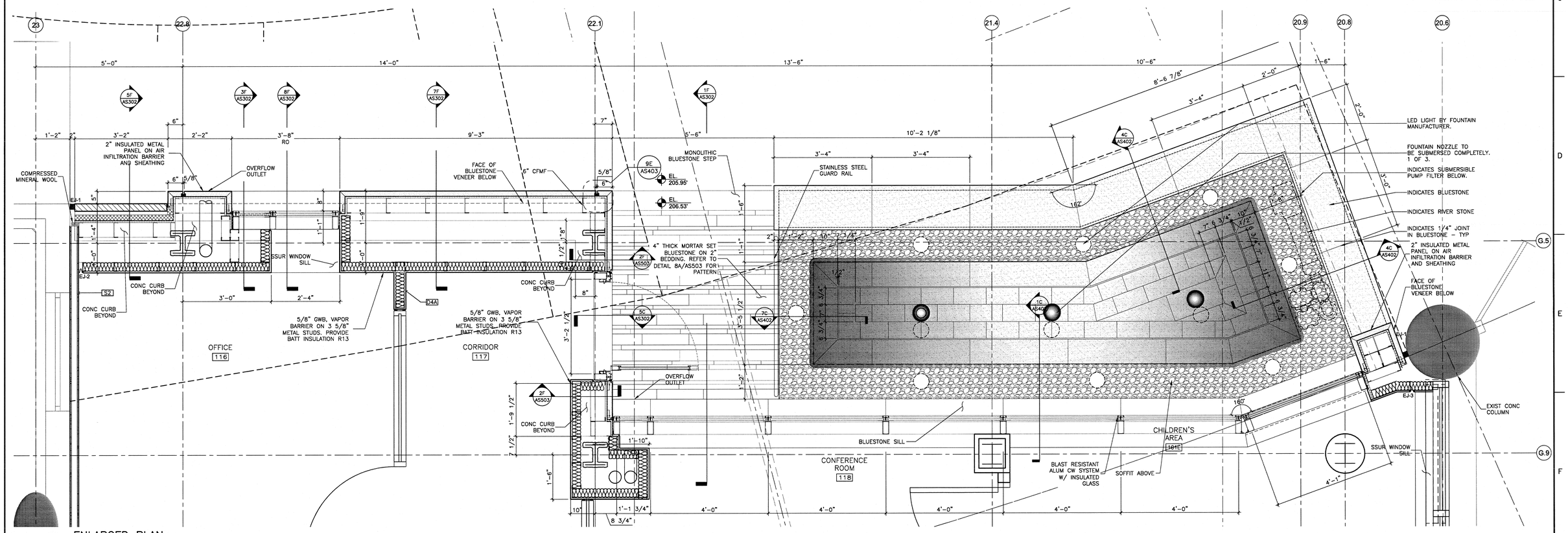

1F ENLARGED PLAN
SCALE: 3/4" = 1'-0"

Revisions	Date
ISSUE 1 - ISSUE FOR CONSTRUCTION	04.30.2013
95 % SUBMISSION	02.17.2012
75 % SUBMISSION	03.16.2011
25 % SUBMISSION	10.29.2010

CONSULTANTS:

DISTRICT OF COLUMBIA JOHN L. CARELL No. 11557 REGISTERED ARCHITECT

ARCHITECT/ENGINEERS:

EWING COLE
1025 Connecticut Avenue, NW
Suite 900
Washington, DC 20036-5405
Tel: 202-467-1500 Fax: 202-296-8950

Drawing Title: ENLARGED PLANS AND SECTION DETAILS - WATER FOUNTAIN

Approved: Project Director

Project Title: OIF / OEF WELCOME CENTER DEPARTMENT OF VETERANS AFFAIRS VAMC

Location: Veterans Affairs Medical Center, 50 Irving Street NW Washington DC

Date: 4-30-2013 | Checked: KC | Drawn: AN/KC

Project Number: 688-334 OIF/OEF

Building Number:

Drawing Number: AS402

Office of Construction and Facilities Management

Department of Veterans Affairs

VA FORM 08-6231

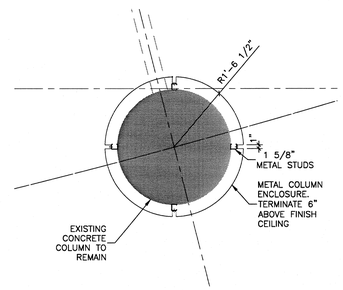

7E PLAN DETAIL– METAL COLUMN ENCLOSURE
SCALE: 3/4" = 1'-0"

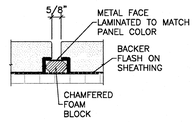

9E PLAN DETAIL– TYPICAL VERTICAL JOINT
SCALE: 3" = 1'-0"

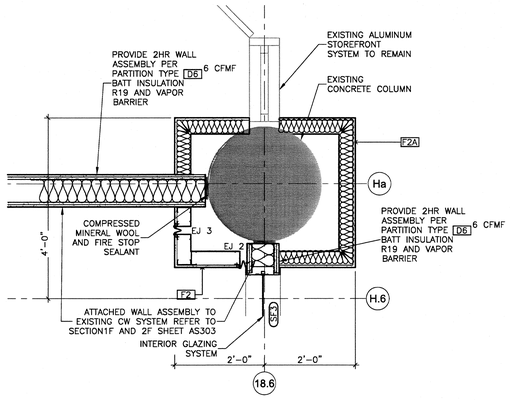

5F PLAN DETAIL– COLUMN ENCLOSURE
SCALE: 3/4" = 1'-0"

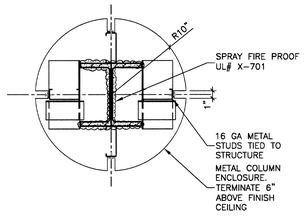

7F PLAN DETAIL– TYPICAL METAL COLUMN ENCLOSURE
SCALE: 3/4" = 1'-0"

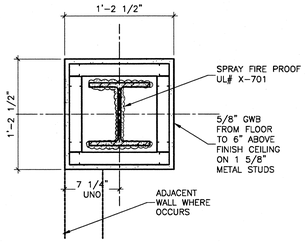

9F PLAN DETAIL– TYPICAL COLUMN ENCLOSURE
SCALE: 3/4" = 1'-0"

Revisions	Date
ISSUE 1 - ISSUE FOR CONSTRUCTION	04.30.2013
95 % SUBMISSION	02.17.2012
75 % SUBMISSION	03.16.2011
25 % SUBMISSION	10.29.2010

CONSULTANTS:

DISTRICT OF COLUMBIA JOHN L. CAPELLI No. 10557 REGISTERED ARCHITECT

ARCHITECT/ENGINEERS:

EWING COLE
1025 Connecticut Avenue, NW
Suite 900
Washington, DC 20036-5405
Tel: 202-467-1500 Fax: 202-296-8950

Drawing Title: ENLARGED PLANS

Approved: Project Director

Project Title: OIF / OEF WELCOME CENTER DEPARTMENT OF VETERANS AFFAIRS VAMC

Location: Veterans Affairs Medical Center, 50 Irving Street NW Washington DC

Date: 4-30-2013 | Checked: CH | Drawn: AN

Project Number: 688-334 OIF/OEF

Building Number:

Drawing Number: AS403 --

Office of Construction and Facilities Management

Department of Veterans Affairs

VA FORM 08-6231

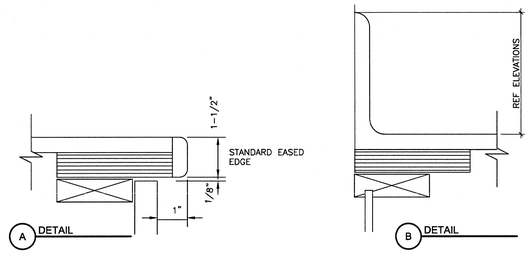

9 SOILD SURFACE/ QUARTZ MILLWORK DETAILS
NOT TO SCALE

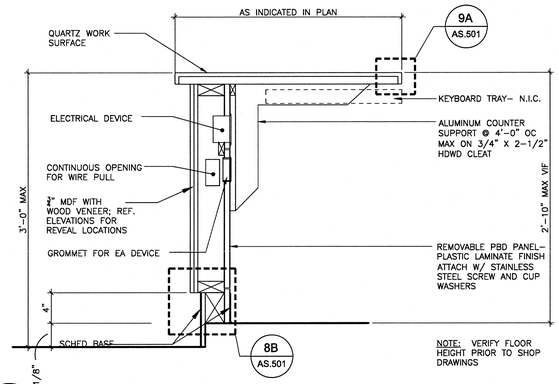

6 RECEPTION DESK MILLWORK
SCALE: 1-1/2" = 1'-0"

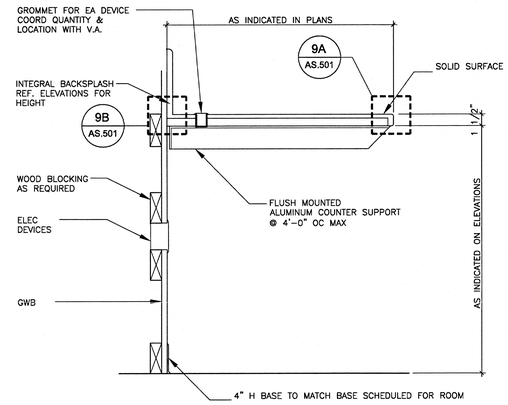

3 TYPICAL WORK SURFACE MILLWORK
SCALE: 1-1/2" = 1'-0"

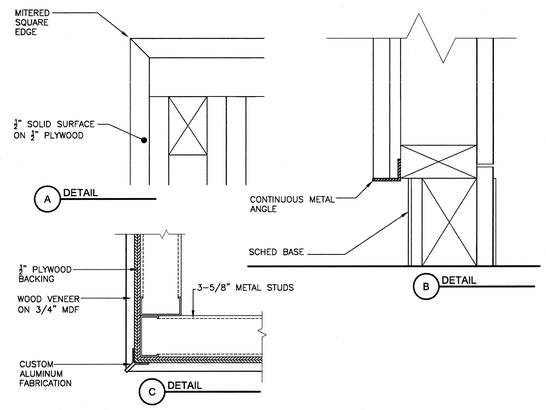

8 RECEPTION DESK MILLWORK DETAILS
NOT TO SCALE

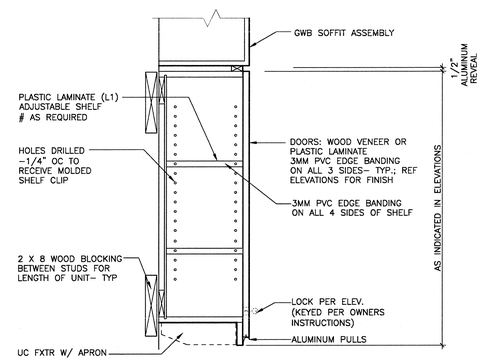

5 TYPICAL MILLWORK UPPER CABINET
SCALE: 1-1/2" = 1'-0"

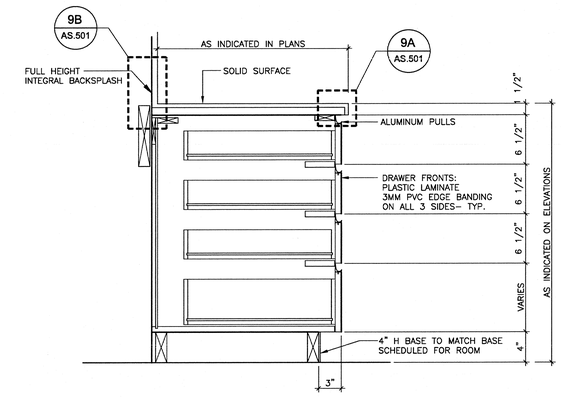

2 TYPICAL DRAWER MILLWORK CABINET
SCALE: 1-1/2" = 1'-0"

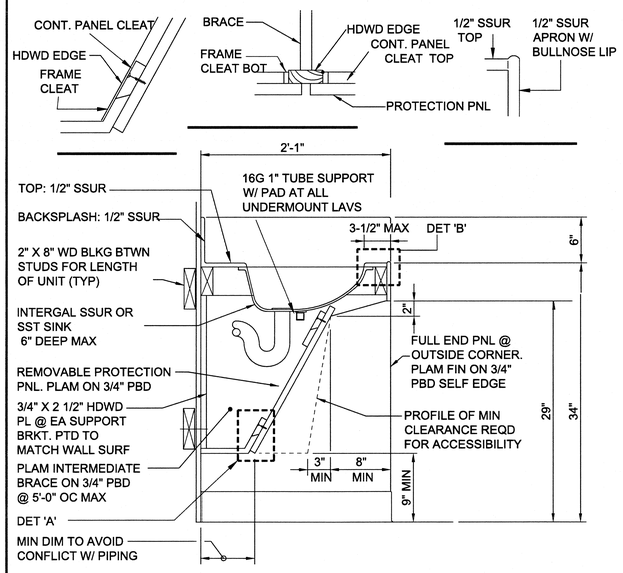

10 LAVATORY COUNTER W/ SSUR TOP
SCALE: 1-1/2" = 1'-0"

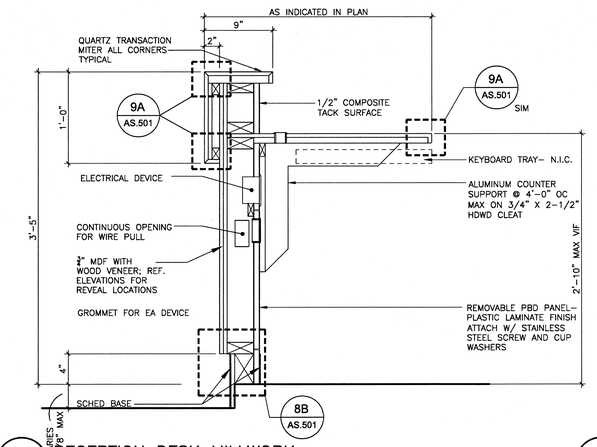

7 RECEPTION DESK MILLWORK
SCALE: 1-1/2" = 1'-0"

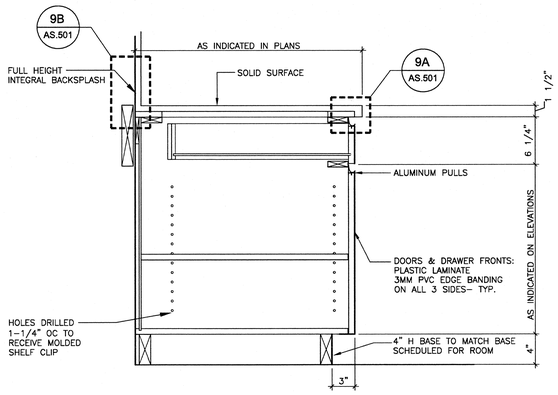

4 TYPICAL MILLWORK BASE CABINET
SCALE: 1-1/2" = 1'-0"

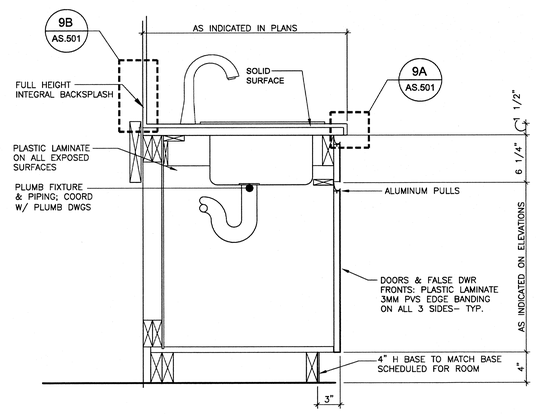

1 TYPICAL SINK MILLWORK CABINET
SCALE: 1-1/2" = 1'-0"

Revisions	Date
ISSUE 1 - ISSUE FOR CONSTRUCTION	04.30.2013
95 % SUBMISSION	02.17.2012
75 % SUBMISSION	03.16.2011
25 % SUBMISSION	10.29.2010

CONSULTANTS:

DISTRICT OF COLUMBIA JOHN L. CAPELLI No. 557 REGISTERED ARCHITECT

ARCHITECT/ENGINEERS:

EWING COLE
1025 Connecticut Avenue, NW
Suite 900
Washington, DC 20036-5405
Tel: 202-467-1500 Fax: 202-296-8950

Drawing Title: MILLWORK DETAILS

Approved Project Director:

Project Title: OIF / OEF WELCOME CENTER DEPARTMENT OF VETERANS AFFAIRS VAMC

Location: Veterans Affairs Medical Center, 50 Irving Street NW Washington DC

Date: 4-30-2013 | Checked: KD | Drawn: TM

Project Number: 688-334 OIF/OEF

Building Number:

Drawing Number: AS501 --

Office of Construction and Facilities Management

Department of Veterans Affairs

VA FORM 08-6231

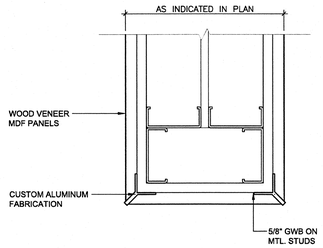

9 MILLWORK VENEER MILLWORK CORNER DETAIL
SCALE: 1-1/2" = 1'-0"

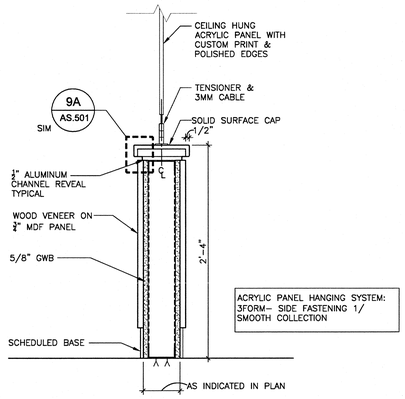

6 RECEPTION DESK MILLWORK
SCALE: 1-1/2" = 1'-0"

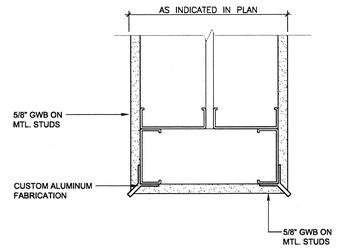

3 MILLWORK VENEER MILLWORK CORNER DETAIL
SCALE: 1-1/2" = 1'-0"

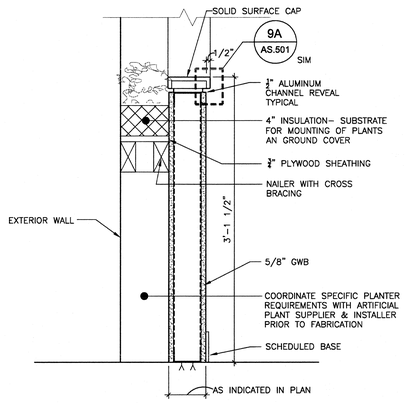

8 PLANTER MILLWORK DETAIL
NOT TO SCALE

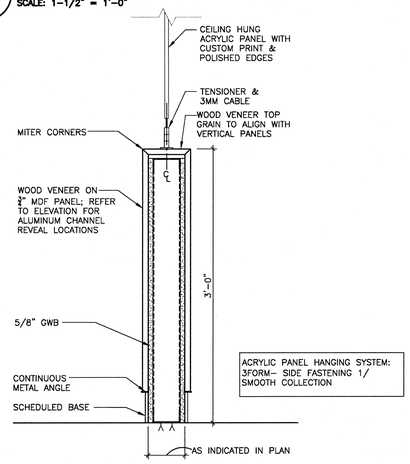

5 TYPICAL MILLWORK UPPER CABINET
SCALE: 1-1/2" = 1'-0"

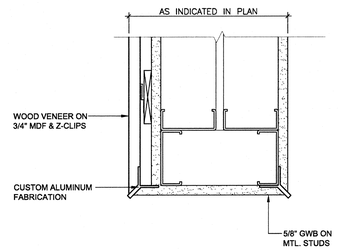

2 WOOD VENEER MILLWORK CORNER DETAIL
SCALE: 3" = 1'-0"

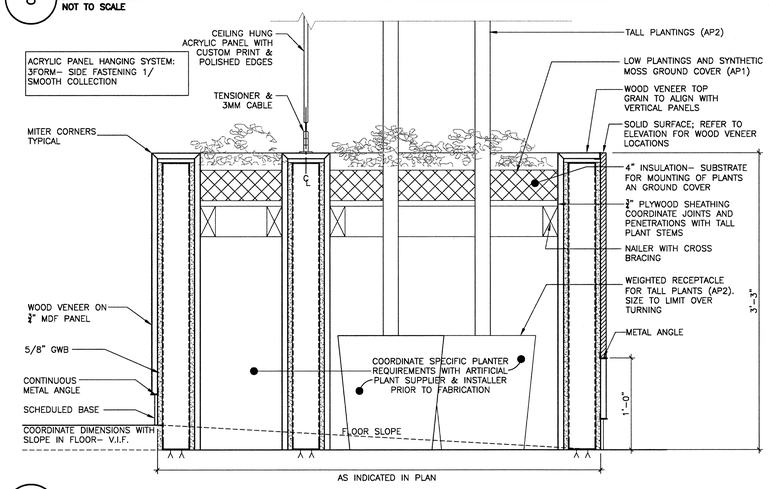

7 PLANTER MILLWORK DETAIL
SCALE: 1-1/2" = 1'-0"

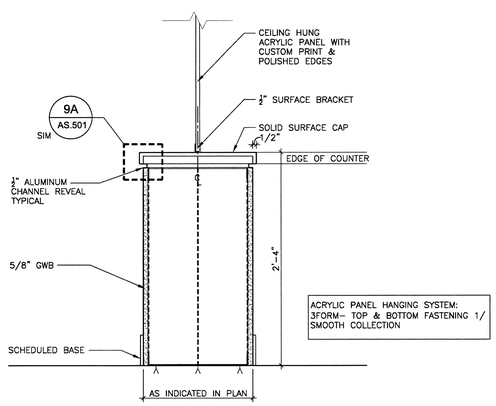

4 HALF WALL W/ SOLID SURFACE CAP
SCALE: 1-1/2" = 1'-0"

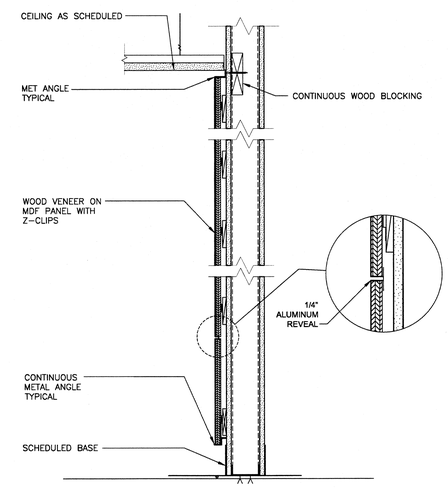

1 WOOD VENEER MILLWORK PANELS
SCALE: 1-1/2" = 1'-0"

Revisions	Date
ISSUE 1 - ISSUE FOR CONSTRUCTION	04.30.2013
95 % SUBMISSION	02.17.2012
75 % SUBMISSION	03.16.2011
25 % SUBMISSION	10.29.2010

CONSULTANTS:

DISTRICT OF COLUMBIA JOHN L. CARFELLO No. 10557 REGISTERED ARCHITECT

ARCHITECT/ENGINEERS:

EWING COLE
1025 Connecticut Avenue, NW
Suite 900
Washington, DC 20036-5405
Tel: 202-467-1500 Fax: 202-296-8950

Drawing Title: MILLWORK DETAILS

Approved Project Director:

Project Title: OIF / OEF WELCOME CENTER DEPARTMENT OF VETERANS AFFAIRS VAMC

Location: Veterans Affairs Medical Center, 50 Irving Street NW Washington DC

Date: 4-30-2013 | Checked: KD | Drawn: TM

Project Number: 688-334 OIF/OEF

Building Number:

Drawing Number: AS502

Office of Construction and Facilities Management

Department of Veterans Affairs

VA FORM 08-6231

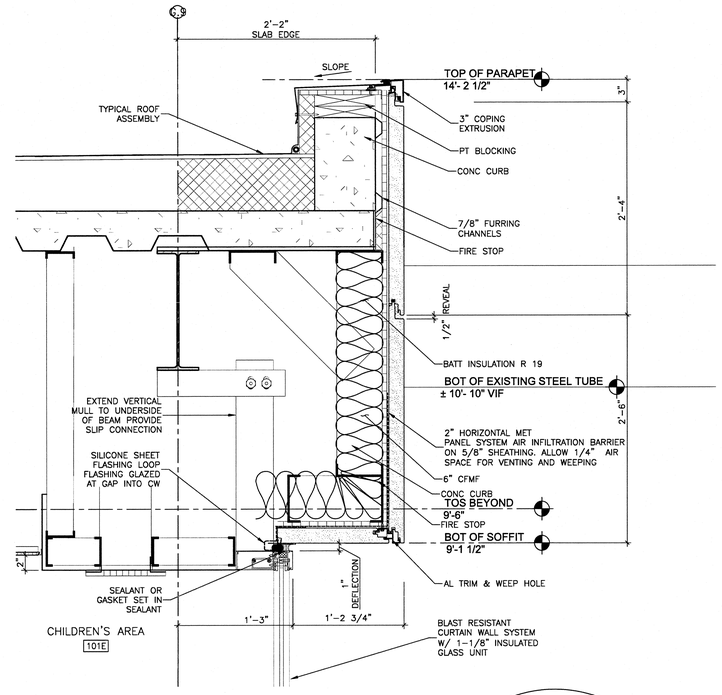

4C SECTION DETAIL
SCALE: 1-1/2" = 1'-0"

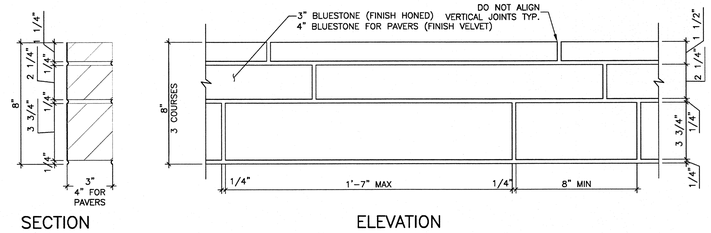

8A TYPICAL BLUESTONE COURSING
SCALE: 3" = 1'-0"

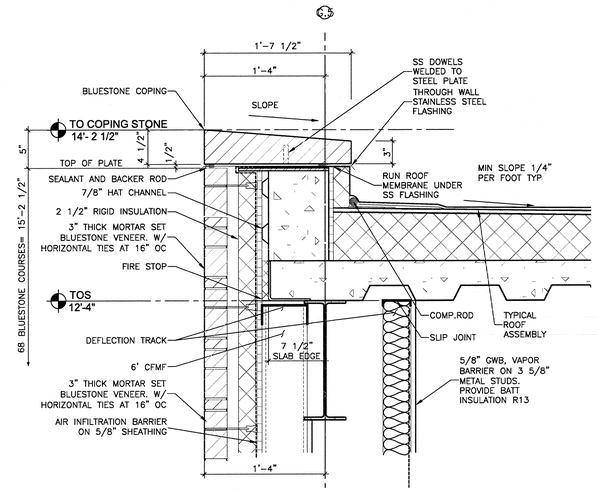

8D SECTION DETAIL
SCALE: 1-1/2" = 1'-0"

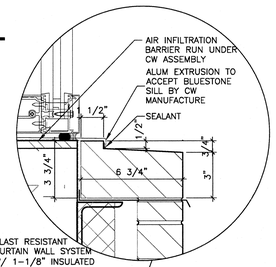

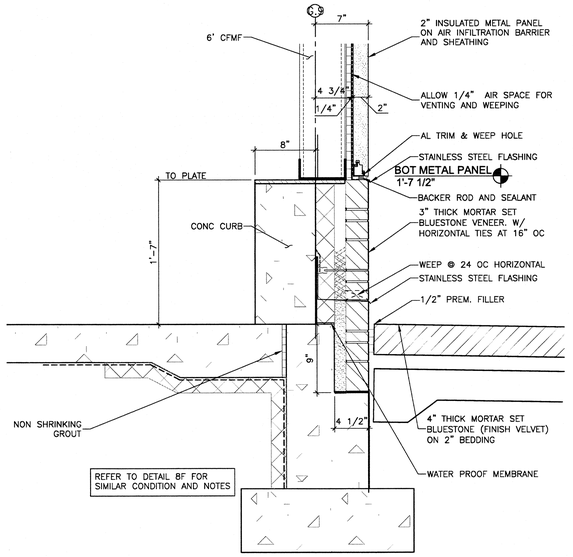

2F SECTION DETAIL
SCALE: 1-1/2" = 1'-0"

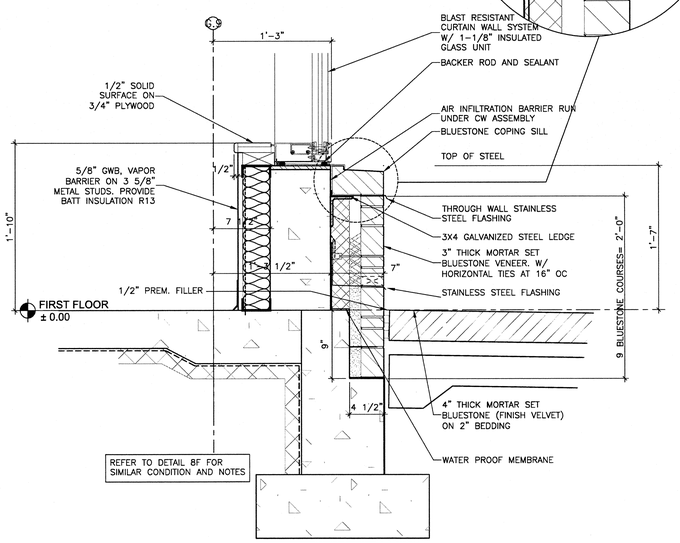

4F SECTION DETAIL
SCALE: 1-1/2" = 1'-0"

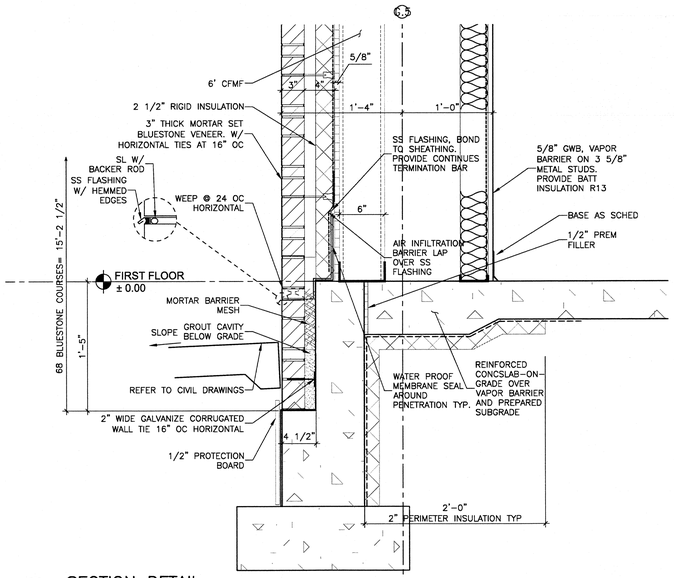

8F SECTION DETAIL
SCALE: 1-1/2" = 1'-0"

Revisions	Date
ISSUE 1 - ISSUE FOR CONSTRUCTION	04.30.2013
95 % SUBMISSION	02.17.2012
75 % SUBMISSION	03.16.2011
25 % SUBMISSION	10.29.2010

CONSULTANTS:

DISTRICT OF COLUMBIA JOHN L. CARLEY No. 10557 REGISTERED ARCHITECT

ARCHITECT/ENGINEERS:

EWING COLE
1025 Connecticut Avenue, NW
Suite 900
Washington, DC 20036-5405
Tel: 202-467-1500 Fax: 202-296-8950

Drawing Title: DETAILS

Approved Project Director:

Project Title: OIF / OEF WELCOME CENTER DEPARTMENT OF VETERANS AFFAIRS VAMC

Location: Veterans Affairs Medical Center, 50 Irving Street NW Washington DC

Date: 4-30-2013 | Checked: CH | Drawn: AN

Project Number: 688-334 OIF/OEF

Building Number:

Drawing Number: AS503

Office of Construction and Facilities Management

Department of Veterans Affairs

VA FORM 08-6231