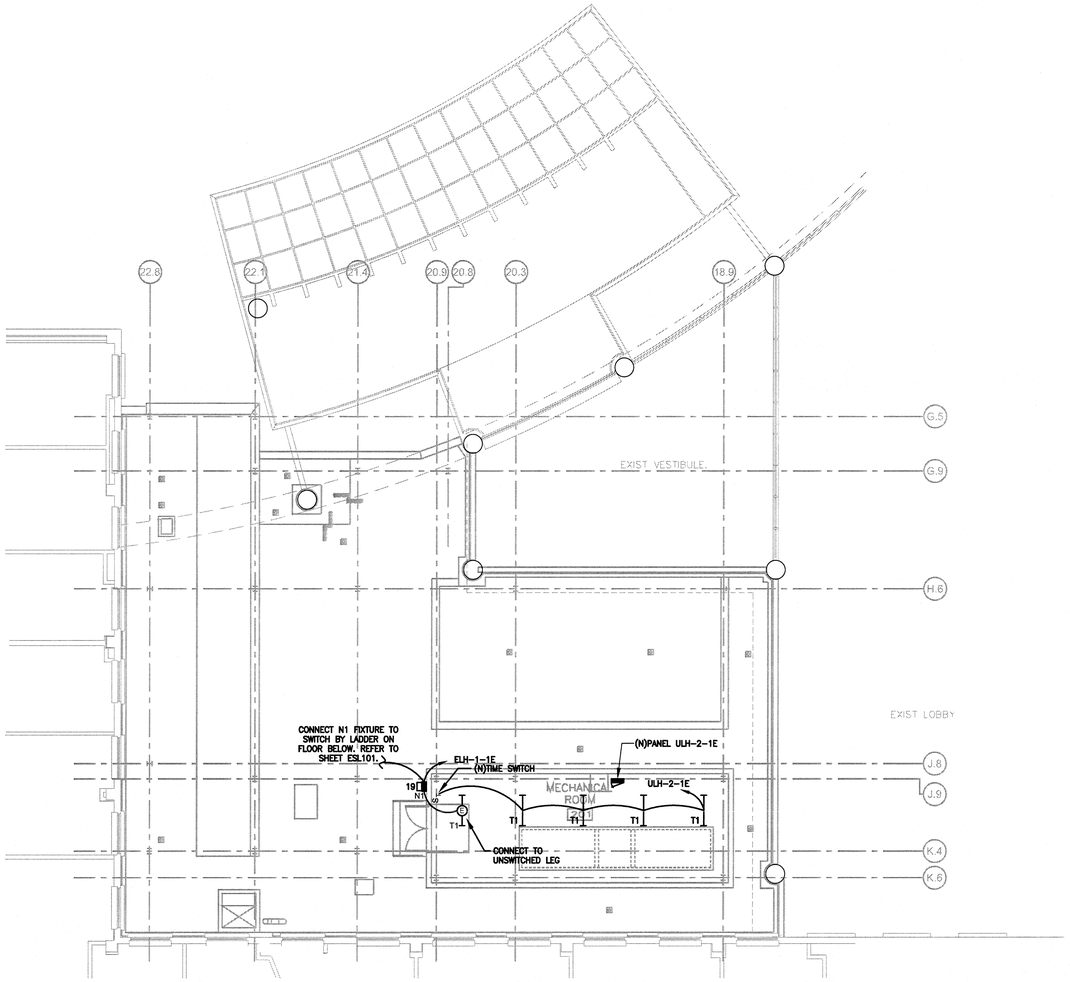

1 PARTIAL ROOF AND PENTHOUSE PLAN - LIGHTING - NEW WORK
SCALE: 1/8" = 1'-0"

GENERAL NOTES:

1. FOR ELECTRICAL SYMBOLS, ABBREVIATIONS AND MOUNTING HEIGHTS, REFER TO DRAWING ES001
2. FOR LUMINAIRE DESCRIPTIONS, REFER TO LIGHTING FIXTURE SCHEDULE ON DRAWING ES601.
3. COORDINATE LOCATIONS OF FIXTURES WITH MECHANICAL EQUIPMENT WITHIN THE SPACE.

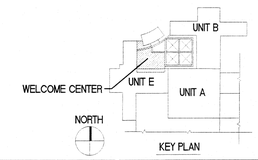

KEY PLAN

Revisions	Date
ISSUE 1 - ISSUE FOR CONSTRUCTION	04.30.2013
95 % SUBMISSION	02.17.2012
75 % SUBMISSION	03.16.2011
25 % SUBMISSION	10.29.2010

CONSULTANTS:

DISTRICT OF COLUMBIA MARY ALCARIO NO. 901510 REGISTERED PROFESSIONAL ENGINEER

ARCHITECT/ENGINEERS:

EWING COLE
1025 Connecticut Avenue, NW
Suite 900
Washington, DC 20036-5405
Tel: 202-467-1500 Fax: 202-296-8950

Drawing Title: PARTIAL ROOF AND PENTHOUSE PLAN LIGHTING - NEW WORK

Approved Project Director:

Project Title: OIF / OEF WELCOME CENTER DEPARTMENT OF VETERANS AFFAIRS VAMC

Location: Veterans Affairs Medical Center, 50 Irving Street NW Washington DC

Date: 4-30-2013 | Checked: - | Drawn: AK

Project Number: 688-334 OIF/OEF

Building Number:

Drawing Number: ESL102

Office of Construction and Facilities Management

Department of Veterans Affairs

VA FORM 08-6231

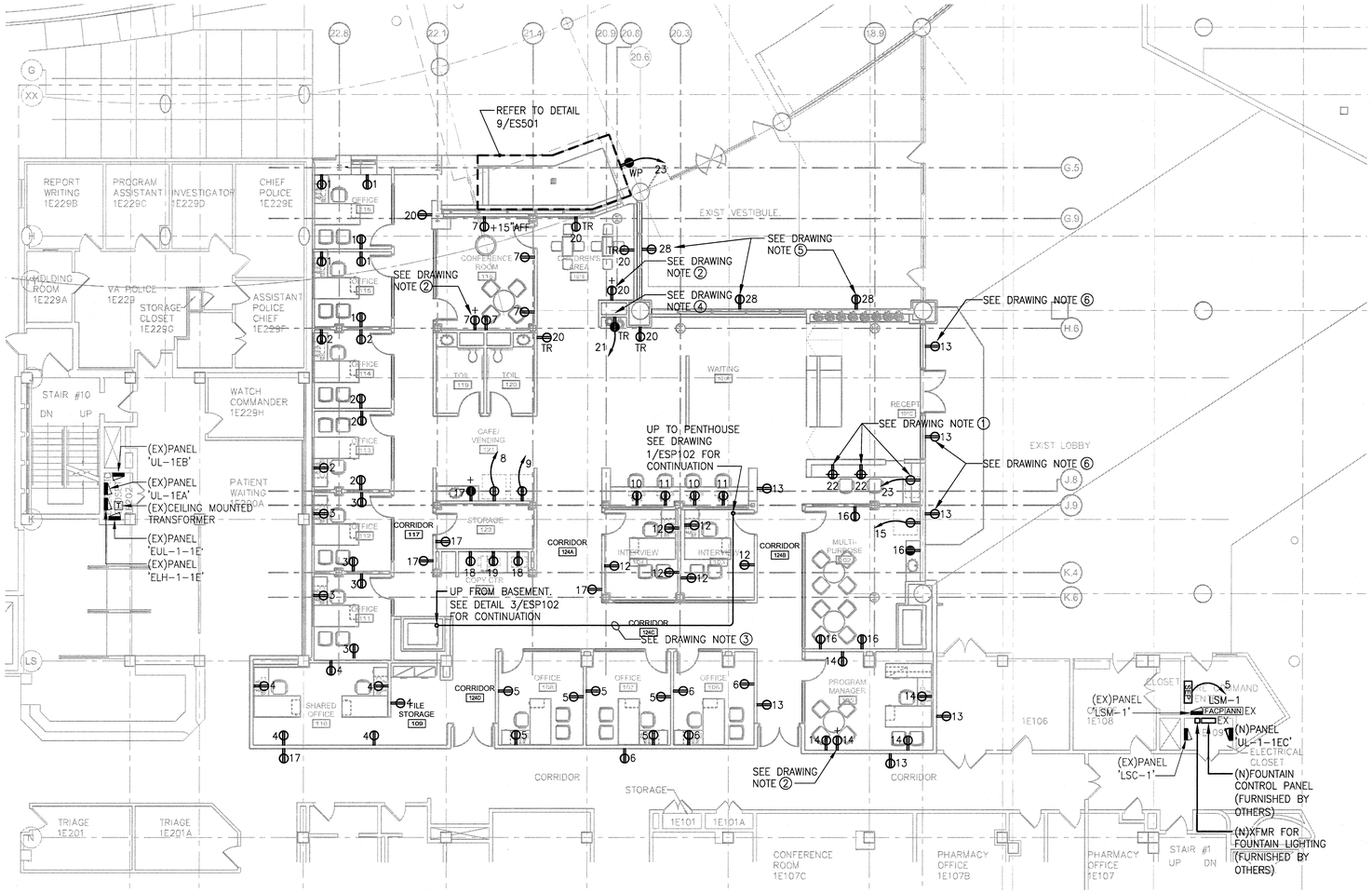

1 PARTIAL GROUND FLOOR PLAN - POWER - NEW WORK
SCALE: 1/8" = 1'-0"

GENERAL NOTES:

1. FOR ELECTRICAL SYMBOLS, ABBREVIATIONS AND MOUNTING HEIGHTS, REFER TO DRAWING ES001.
2. RECEPTACLES FEEDING DEDICATED EQUIPMENT ARE DESIGNATED WITH A HOME RUN AND SHALL BE CONNECTED ONE PER CIRCUIT.
3. REFER TO ARCHITECTURAL DRAWINGS AND ELEVATIONS FOR RECEPTACLE LOCATIONS & MOUNTING HEIGHTS.
4. UNLESS INDICATED OTHERWISE, ALL NEW PANELS, CABINETS AND THE LIKE INSTALLED IN ELECTRIC CLOSETS OR EQUIPMENT ROOMS ARE TO BE MOUNTED ON STRUCTURAL CHANNEL FRAMING WHICH SHALL BE SECURED TO STRUCTURAL FLOOR AND CEILING SLABS. REFER TO DETAIL 8/ES501.
5. UNLESS OTHERWISE NOTED, ALL 120V BRANCH CIRCUITS SHOWN SHALL BE FROM NEW PANEL 'UL-1-1EC', LOCATED IN ELECTRICAL ROOM 1E109.
6. CONNECT ALL AIR VOLUME CONTROL BOXES TO PANEL UL-1-1EC. UNLESS OTHERWISE NOTED, CONNECT NO MORE THAN TEN (10) AIR VOLUME CONTROL BOXES TO A SINGLE 20A/1P BRANCH CIRCUIT. REFER TO MECHANICAL DRAWINGS FOR LOCATIONS AND QUANTITIES OF AIR VOLUME CONTROL BOXES.

DRAWING NOTES:

1. COORDINATE INSTALLATION OF RECEPTACLES IN MILLWORK WITH ARCHITECT.
2. TELEVISION RECEPTACLE. COORDINATE MOUNTING EXACT LOCATION AND MOUNTING HEIGHT WITH ARCHITECTURAL ELEVATIONS.
3. RUN FEEDER FOR NEW PANEL 'ULH-1-2E' AS TIGHT TO THE FIRST FLOOR DECK AS POSSIBLE. REFER TO SHEET ESP102 FOR PANEL LOCATION.
4. CONNECT ELECTRONIC TRAP PRIMER IN THIS LOCATION TO NEAREST 120V BRANCH CIRCUIT CURRENTLY SERVING THE AREA. COORDINATE WITH PLUMBING CONTRACTOR.
5. PROVIDE RECEPTACLES FOR CONDENSATE PUMPS (TYPICAL FOR 3). COORDINATE EXACT LOCATIONS OF RECEPTACLES WITH DIV. 25 CONTRACTOR AND THE CONDENSATE PUMP LOCATIONS.
6. COORDINATE LOCATION OF RECEPTACLE WITH OWNER AND FINAL WAY-FINDER LOCATION.

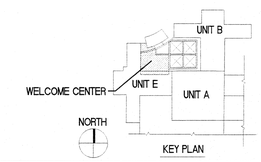

Revisions:	Date
ISSUE 1 - ISSUE FOR CONSTRUCTION	04.30.2013
95 % SUBMISSION	02.17.2012
75 % SUBMISSION	03.16.2011
25 % SUBMISSION	10.29.2010

CONSULTANTS:

ARCHITECT/ENGINEERS:

EWING COLE
1025 Connecticut Avenue, NW
Suite 900
Washington, DC 20036-5405
Tel: 202-467-1500 Fax: 202-296-8950

Drawing Title: PARTIAL GROUND FLOOR PLAN POWER - NEW WORK

Approved Project Director

Project Title: OIF / OEF WELCOME CENTER DEPARTMENT OF VETERANS AFFAIRS VAMC

Location: Veterans Affairs Medical Center, 50 Irving Street NW Washington DC

Date: 4-30-2013 | Checked: - | Drawn: AK

Project Number: 688-334 OIF/OEF

Building Number

Drawing Number: ESP101

Office of Construction and Facilities Management

Department of Veterans Affairs

VA FORM 08-6231

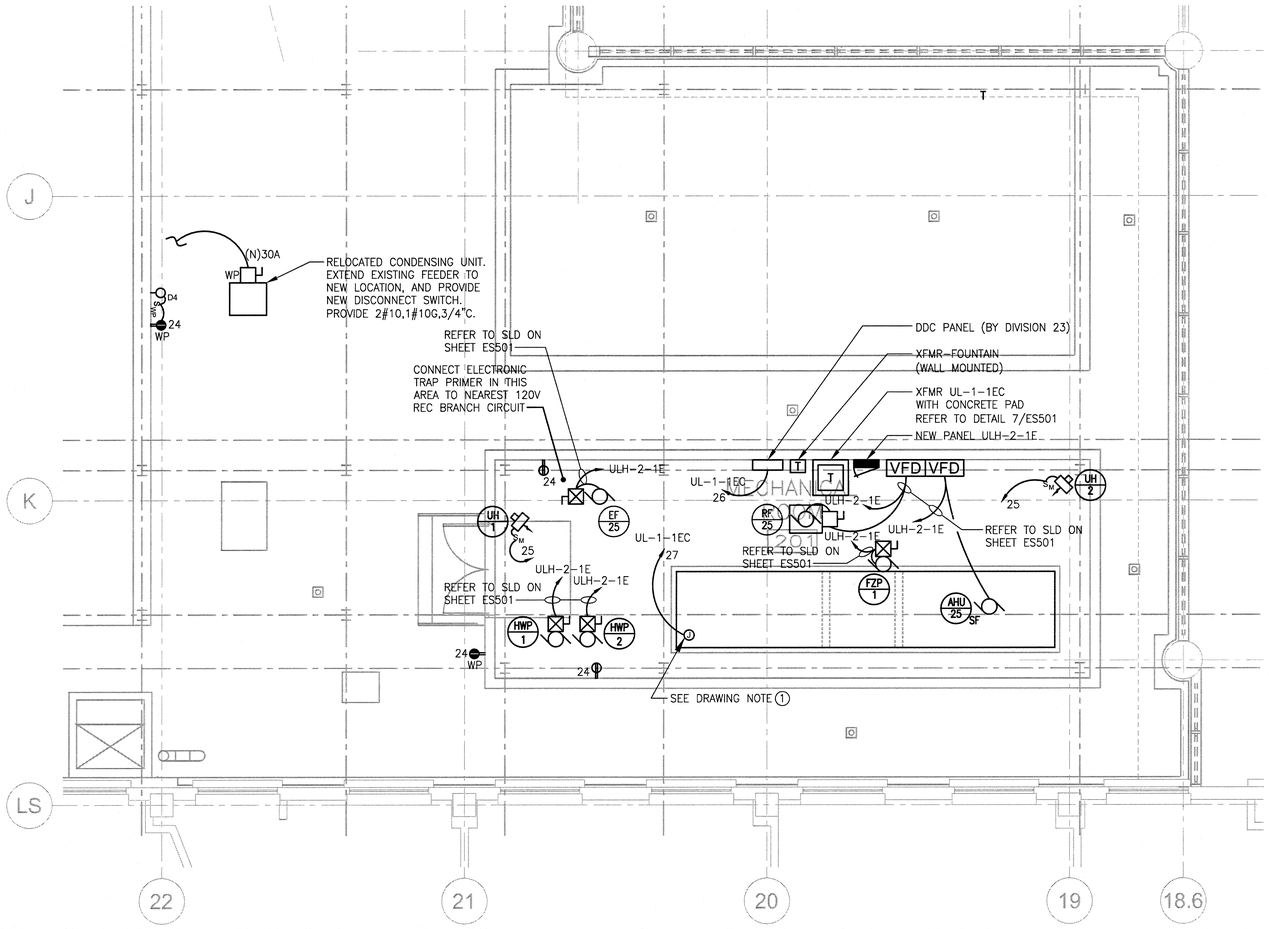

1 PARTIAL ROOF AND PENTHOUSE PLAN - POWER - NEW WORK
SCALE: 1/4" = 1'-0"

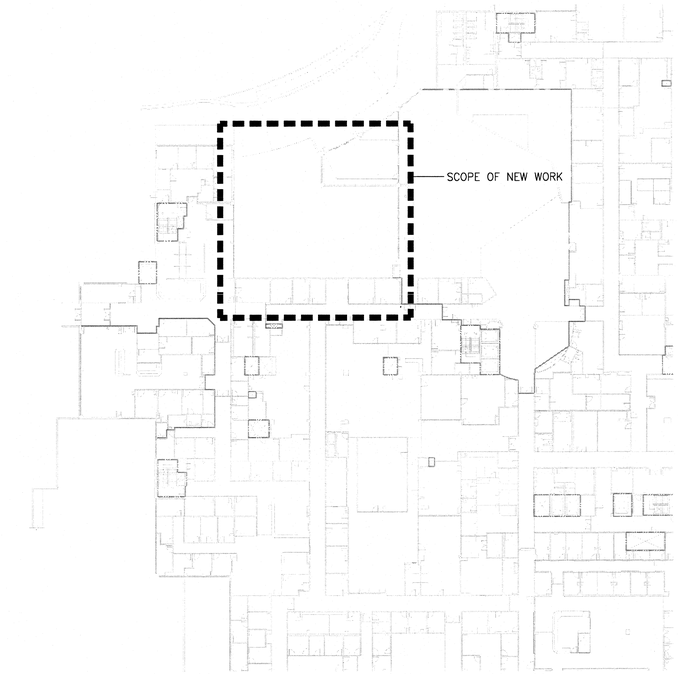

2 PARTIAL GROUND FLOOR PLAN
SCALE: 1/32" = 1'-0"

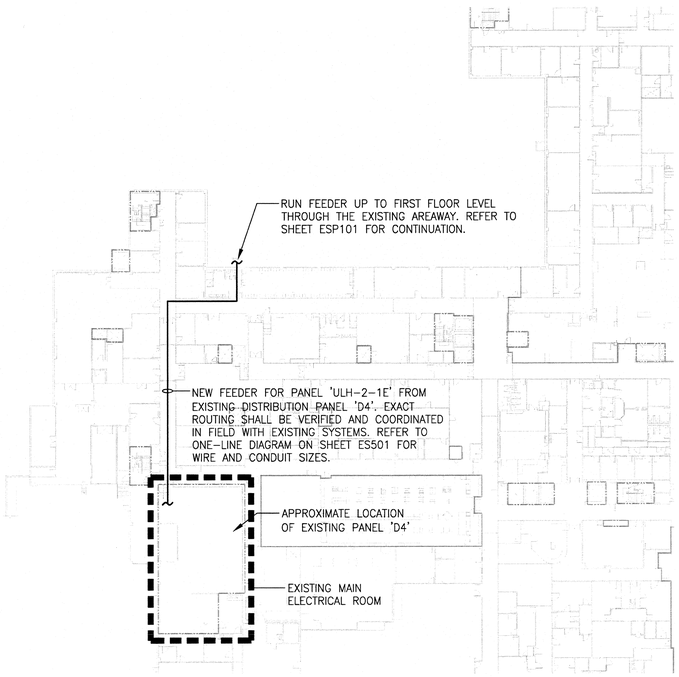

3 PARTIAL BASEMENT FLOOR PLAN
SCALE: 1/32" = 1'-0"

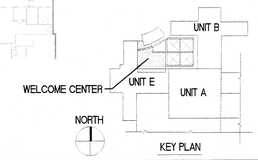

GENERAL NOTES:

1. FOR ELECTRICAL SYMBOLS, ABBREVIATIONS AND MOUNTING HEIGHTS, REFER TO DRAWING ES001.
2. UNLESS INDICATED OTHERWISE, ALL NEW PANELS, CABINETS AND THE LIKE INSTALLED IN ELECTRIC CLOSETS OR EQUIPMENT ROOMS ARE TO BE MOUNTED ON STRUCTURAL CHANNEL FRAMING WHICH SHALL BE SECURED TO STRUCTURAL FLOOR AND CEILING SLABS. REFER TO DETAIL 8/ES501
3. UNLESS OTHERWISE NOTED, ALL 120V BRANCH CIRCUITS SHOWN SHALL BE FROM NEW PANEL 'UL-1-1EC', LOCATED IN ELECTRICAL CLOSET 1E109. REFER TO SHEET ESP101.
4. MECHANICAL LOADS SHALL BE SERVED WITH CONDUCTORS IN RACEWAY. ALL EXTERIOR WIRING SHALL BE CONDUCTORS IN GRSC. ALL EXTERIOR DEVICES SHALL BE WEATHERPROOF.

DRAWING NOTES:

1. JUNCTION BOX INTEGRAL TO AHU PROVIDED BY MANUFACTURER. CONTRACTOR TO PROVIDE 120V, 1-PHASE BRANCH CIRCUIT BACK TO PANEL SHOWN, AND MAKE ALL NECESSARY CONNECTION TO LUMINAIRES, SWITCHES, RECEPTACLES AND ALL OTHER 120V EQUIPMENT AS REQUIRED.

Revisions:	Date
ISSUE 1 - ISSUE FOR CONSTRUCTION	04.30.2013
95 % SUBMISSION	02.17.2012
75 % SUBMISSION	03.16.2011
25 % SUBMISSION	10.29.2010

CONSULTANTS:

DISTRICT OF COLUMBIA — DAVID A. CARTER — 10 — REGISTERED PROFESSIONAL ENGINEER

ARCHITECT/ENGINEERS:

EWING COLE
1025 Connecticut Avenue, NW
Suite 900
Washington, DC 20036-5405
Tel: 202-467-1500 Fax: 202-296-8950

Drawing Title: PARTIAL ROOF AND PENTHOUSE PLAN POWER - NEW WORK

Approved: Project Director

Project Title: OIF / OEF WELCOME CENTER DEPARTMENT OF VETERANS AFFAIRS VAMC

Location: Veterans Affairs Medical Center, 50 Irving Street NW Washington DC

Date: 4-30-2013 | Checked: - | Drawn: AK

Project Number: 688-334 OIF/OEF

Building Number:

Drawing Number: ESP102

Office of Construction and Facilities Management

Department of Veterans Affairs

VA FORM 08-6231

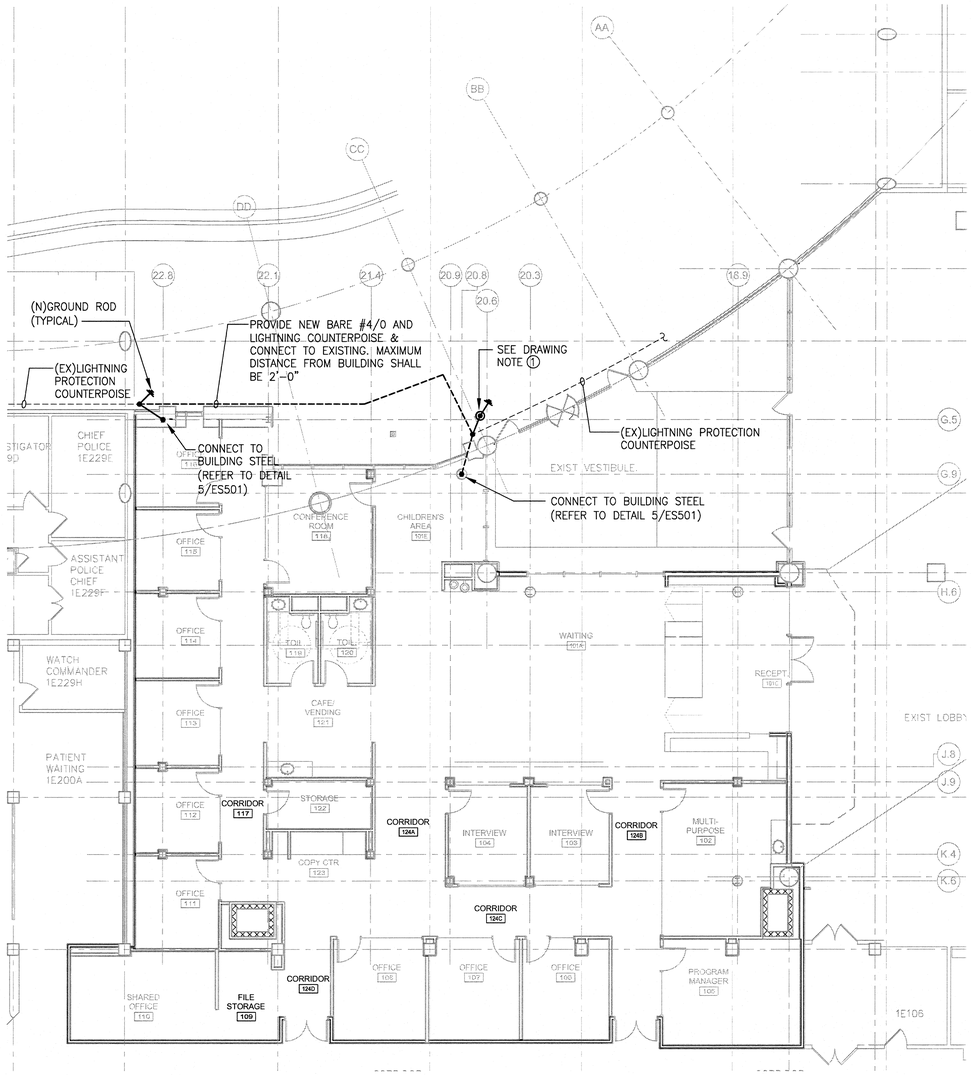

1 PARTIAL GROUND FLOOR PLAN - GROUNDING - NEW WORK
SCALE: 1/8" = 1'-0"

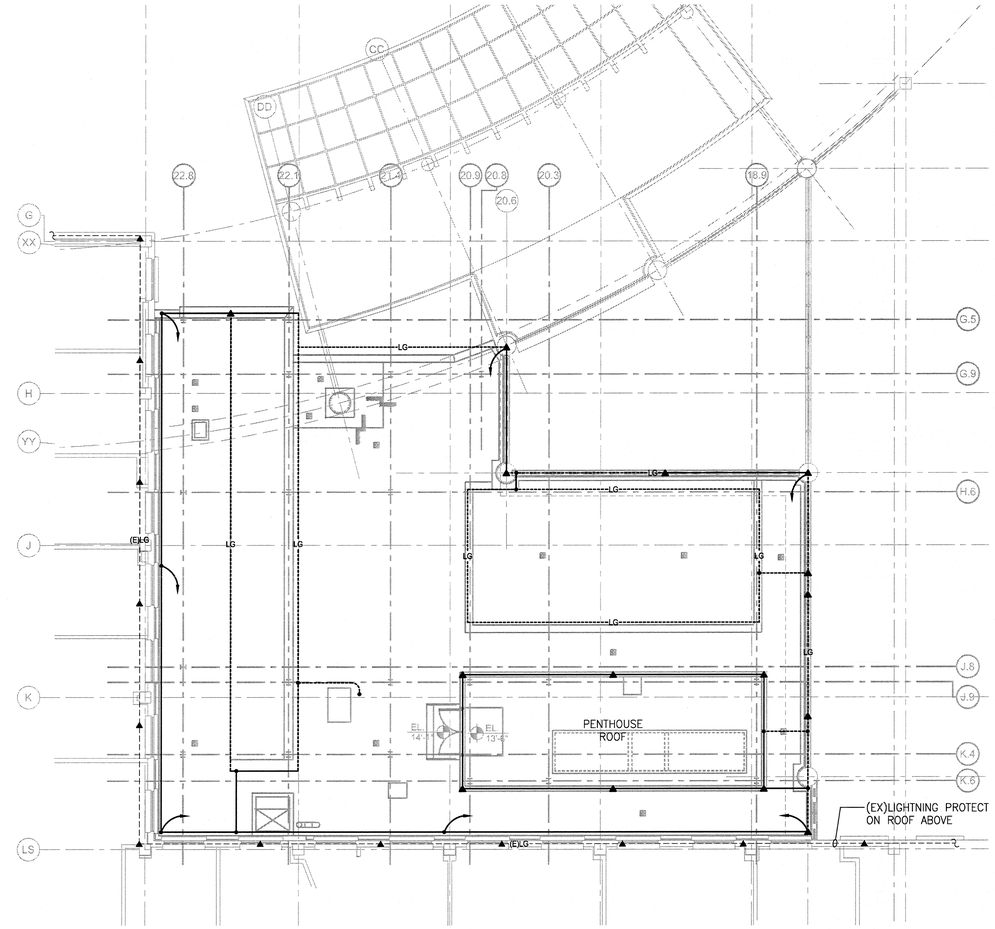

2 PARTIAL ROOF AND PENTHOUSE PLAN - LIGHTNING PROTECTION - NEW WORK
SCALE: 1/8" = 1'-0"

PROVIDE UL MASTER LABEL LIGHTNING PROTECTION SYSTEM IN ACCORDANCE WITH CRITERIA BELOW:

AIR TERMINALS: 3/8" DIAMETER, 18" HIGH AT A MAXIMUM OF 20 FEET INTERVALS ALONG ROOFTOP PERIMETER – NONPERIMETER AIR TERMINALS SHALL HAVE 2" SQUARE/ROUND TOP PLATE

COUNTERPOISE: THE EARTH ELECTRODE SYSTEM SHALL CONSIST OF A #4/0 AWG BARE COPPER CONDUCTOR INSTALLED AROUND THE PERIMETER OF THE NEW WELCOME CENTER ADDITION, NOT LESS THAN 2 FEET BELOW GRADE. COUNTERPOISE SHALL NOT EXTEND LESS THAN 3 FEET NOR MORE THAN 8 FEET BEYOND THE PERIMETER OF BUILDING WALLS OR FOOTINGS.

MAIN RUNS: BARE 28 STRAND, #14 AWG COPPER

SECONDARY RUNS: BARE 24 STRAND, #14 AWG COPPER

DOWN RUNS: BARE OR INSULATED 28 STRAND, #14 AWG COPPER

ROD INTERCONNECTION CONDUCTOR: BARE OR INSULATED 28 STRAND, #14 AWG COPPER

CONDUCTOR FASTENERS: 3 FEET INTERVALS, COPPER CLIPS

BOND ALL ROOFTOP MECHANICAL EQUIPMENT TO SYSTEM

CONTRACTOR TO FURNISH AND INSTALL ANY AND ALL EQUIPMENT REQUIRED TO OBTAIN A U.L. MASTER LABEL.

THE EXISTING BUILDING LIGHTNING PROTECTION SYSTEM SHALL BE RE-CERTIFIED PRIOR TO INTERCONNECTING TO THE NEW SYSTEM.

GENERAL NOTES:

1. FOR ELECTRICAL SYMBOLS, ABBREVIATIONS AND MOUNTING HEIGHTS, REFER TO DRAWING ES001.
2. FOR LIGHTING PROTECTION CONNECTION AT ROOF, REFER TO DETAIL 4/ES501.

DRAWING NOTES:

1. PROVIDE HANDHOLE ACCESS TO TEST GROUND RESISTANCE AT THIS LOCATION. REFER TO DETAIL 6/ES501.

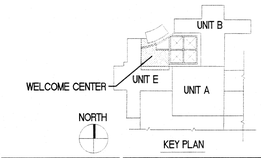

KEY PLAN

Revisions	Date
ISSUE 1 - ISSUE FOR CONSTRUCTION	04.30.2013
95 % SUBMISSION	02.17.2012
75 % SUBMISSION	03.16.2011
25 % SUBMISSION	10.29.2010

CONSULTANTS:

ARCHITECT/ENGINEERS:

EWING COLE
1025 Connecticut Avenue, NW
Suite 900
Washington, DC 20036-5405
Tel: 202-467-1500 Fax: 202-296-8950

Drawing Title: LIGHTNING PROTECTION AND GROUNDING - NEW WORK

Approved Project Director

Project Title: OIF / OEF WELCOME CENTER DEPARTMENT OF VETERANS AFFAIRS VAMC

Location: Veterans Affairs Medical Center, 50 Irving Street NW Washington DC

Date: 4-30-2013 | Checked: - | Drawn: AK

Project Number: 688-334 OIF/OEF

Building Number

Drawing Number: ESP103

Office of Construction and Facilities Management

Department of Veterans Affairs

VA FORM 08-6231

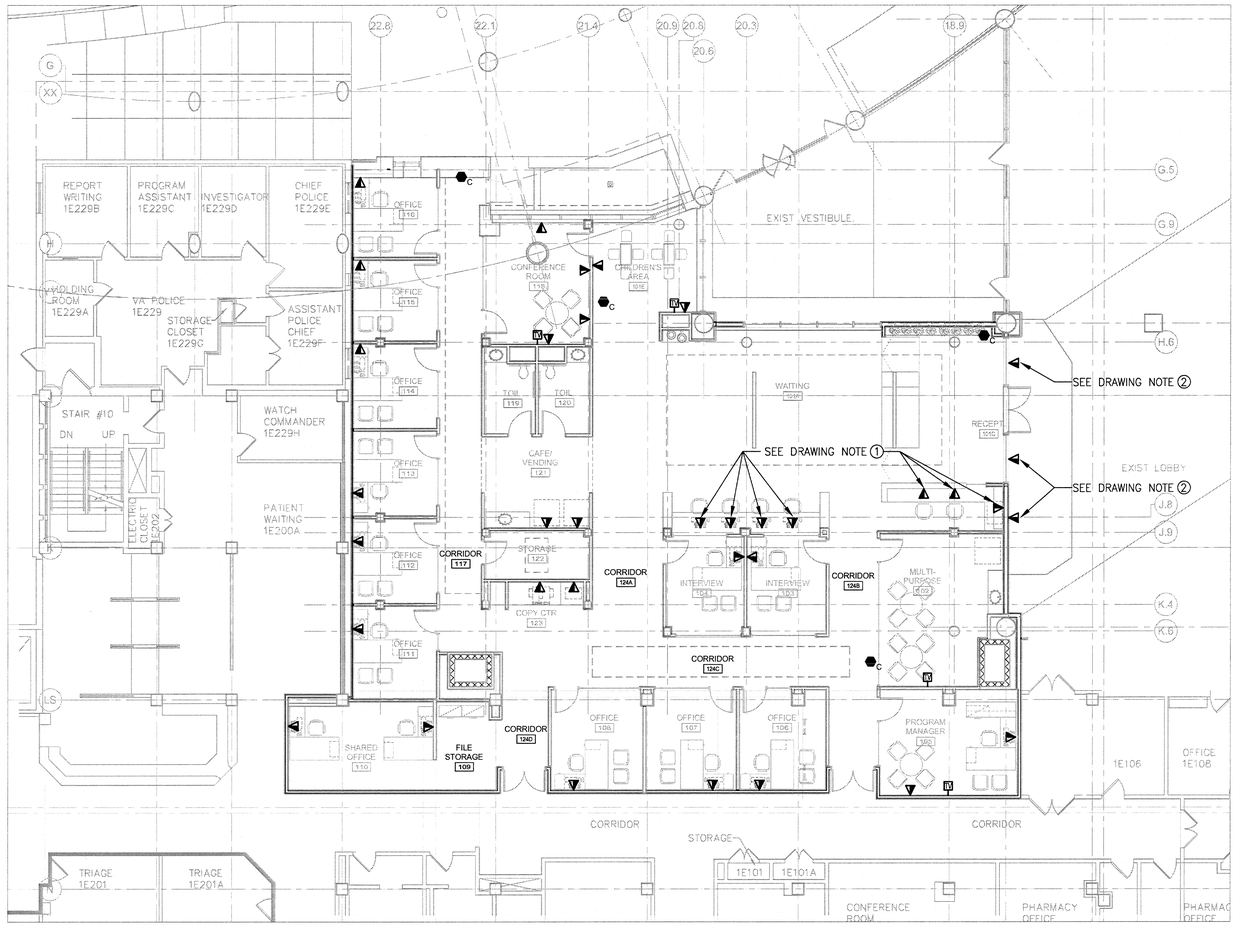

1 PARTIAL GROUND FLOOR PLAN - TELECOMM - NEW WORK
SCALE: 1/8" = 1'-0"

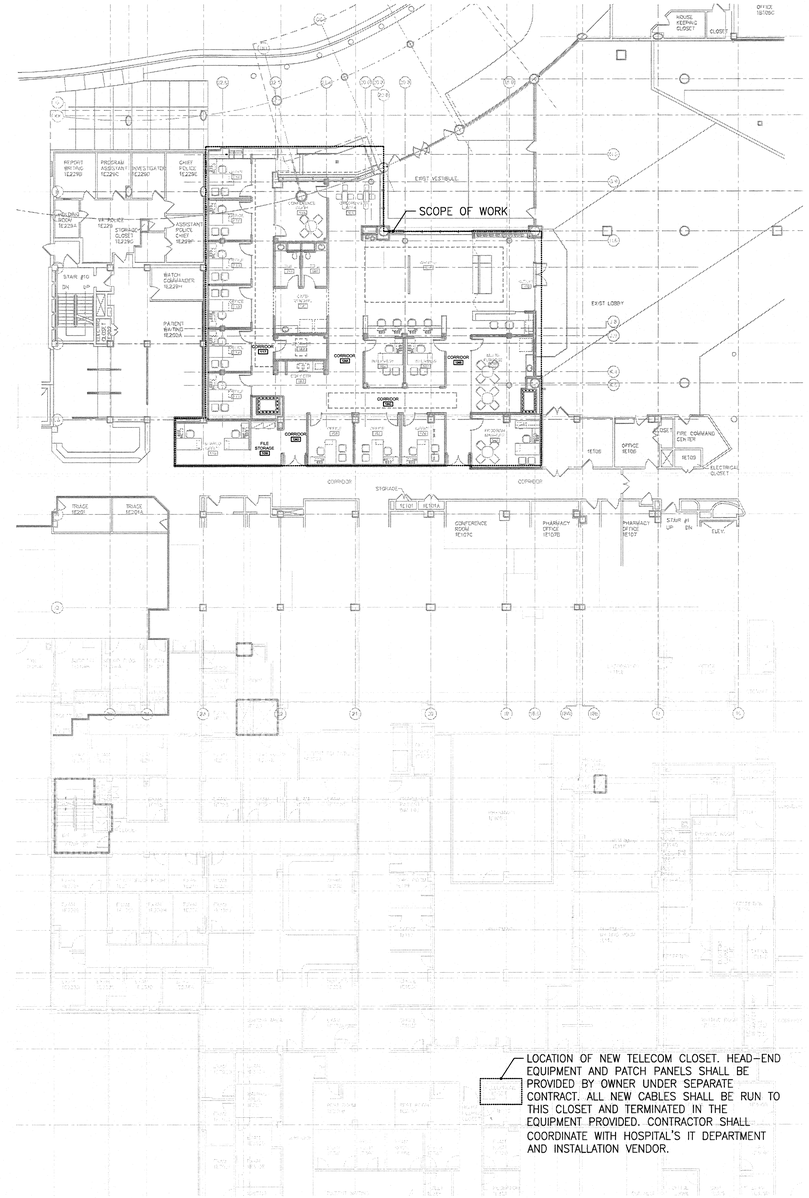

2 PARTIAL GROUND FLOOR PLAN
SCALE: 1/16" = 1'-0"

TELECOMM NOTES:

1. ALL TELECOMM AND TELEVISION DEVICES SHALL BE PROVIDED WITH A 4X4X2-1/8" DEEP BACKBOX, PLASTER RING, PULLSTRING, AND 1" CONDUIT WITH CONNECTOR/BUSHING. CONDUIT SHALL BE STUBBED UP ABOVE NEAREST ACCESSIBLE FINISHED CEILING.

2. TELECOMMUNICATIONS OUTLET/CONNECTORS SHALL INCLUDE JACKS: 100-OHM, BALANCED, TWISTED-PAIR CONNECTOR; FOUR-PAIR, EIGHT-POSITION MODULAR. COMPLY WITH TIA/EIA-568-B.1. MOUNTED IN MULTIGANG STAINLESS STEEL FACEPLATE. FOR USE WITH SNAP-IN JACKS ACCOMMODATING ANY COMBINATION OF UTP, OPTICAL FIBER, AND COAXIAL WORK AREA CORDS.

3. CONTRACTOR SHALL PROVIDE ALL CAT6 TELECOMM CABLES FROM EACH NEW DEVICE SHOWN AND TERMINATE, AS DIRECTED BY GOVERNMENT, IN NEW CLOSET AS SHOWN IN DETAIL 2/EST101. A DEDICATED CABLE/HOMERUN SHALL BE PROVIDED FOR EACH JACK.

4. HORIZONTAL CABLE SHALL BE PLENUM RATED, CAT6 100-OHM, 4-PAIR UTP, WITH COLORED(TO BE SELECTED BY GOVERNMENT) THERMOPLASTIC JACKET.
   A. COMPLY WITH ICEA S-90-661 FOR MECHANICAL PROPERTIES.
   B. COMPLY WITH TIA/EIA-568-B FOR TYPE AND PERFORMANCE SPECIFICATIONS.
   C. LISTED AND LABELED BY AN NRTL ACCEPTABLE TO AUTHORITIES HAVING JURISDICTION AS COMPLYING WITH UL 444, NFPA 70 AND NFPA 262 FOR COMMUNICATIONS.

5. TELEVISION OUTLET SHALL INCLUDE COAXIAL CABLE CONNECTORS: TYPE F, 75 OHMS MODULAR. COMPLY WITH TIA/EIA. MOUNTED IN MULTIGANG STAINLESS STEEL FACEPLATE. FOR USE WITH SNAP-IN JACKS ACCOMMODATING ANY COMBINATION OF UTP, OPTICAL FIBER, AND COAXIAL WORK AREA CORDS.

6. CONTRACTOR SHALL PROVIDE 5,000 LINEAR FEET OF RG6/U, PLENUM RATED, COAX CABLING AND CONNECT TO ALL REQUIRED TV EQUIPMENT AND DEVICES. DEMARCATION POINT WILL BE GIVEN BY THE GOVERNMENT DURING CONSTRUCTION. CONTRACTOR SHALL MAKE ALL FINAL TERMINATIONS AND CONNECTIONS. A DEDICATED CABLE/HOMERUN SHALL BE PROVIDED FOR EACH JACK.

7. ALL CABLIING, MATERIALS AND INSTALLATION METHODS SHALL COMPLY WITH TIA/EIA, BICSI ITSIM, AND NECA STANDARDS.

8. DEDICATED J-HOOKS SHALL BE PROVIDED TO SUPPORT ALL TELECOMM CABLES. CABLE-TRAY SHALL NOT BE USED. TELECOMM CABLES SHALL NOT UTILIZE OTHER DISCIPLINE OR OTHER ELECTRICAL SUPPORTS.

9. IDENTIFY SYSTEM COMPONENTS, WIRING, AND CABLING COMPLYING WITH TIA/EIA-606-A. COMPLY WITH ESTABLISHED FACILITY REQUIREMENTS FOR IDENTIFICATION.

10. PERFORM TESTS AND INSPECTIONS.
   A. VISUALLY INSPECT UTP CABLE JACKET MATERIALS FOR NRTL CERTIFICATION MARKINGS. INSPECT CABLING TERMINATIONS IN COMMUNICATIONS EQUIPMENT ROOMS FOR COMPLIANCE WITH COLOR-CODING FOR PIN ASSIGNMENTS, AND INSPECT CABLING CONNECTIONS FOR COMPLIANCE WITH TIA/EIA-568-B.1.
   B. VISUALLY CONFIRM MARKING OF OUTLETS, COVER PLATES, OUTLET/CONNECTORS, AND PATCH PANELS.
   C. VISUALLY INSPECT CABLE PLACEMENT, CABLE TERMINATION, GROUNDING AND BONDING, EQUIPMENT AND LABELING OF ALL COMPONENTS.
   D. TEST ALL CABLES AND DEVICES IN ACCORDANCE WITH TIA/EIA STANDARDS AND FACILITY REQUIREMENTS.

9. CONTRACTOR SHALL COMMISSION THE SERVICES OF THE HOSPITAL'S TELECOMMUNICATIONS VENDOR TO ASSIST WITH THE ALTERATIONS.

   CORPORATE COMMUNICATION
   7476 NEW RIDGE ROAD
   P.O. BOX 216
   HANOVER, MD 21076
   CONTACT: RON STEVENS
   PH: (410) 859-3222

SECURITY NOTES:

1. CONTRACTOR SHALL PROVIDE 7,000 LINEAR FEET OF CABLING AND CONNECT TO ALL REQUIRED DEVICES. EXACT QUANTITIES AND LOCATIONS OF SECURITY DEVICES SHALL BE GIVEN BY THE GOVERNMENT DURING CONSTRUCTION. DEMARCATION POINT WILL BE GIVEN BY THE GOVERNMENT DURING CONSTRUCTION. CONTRACTOR SHALL MAKE ALL FINAL TERMINATIONS AND CONNECTIONS.

GENERAL NOTES:

1. FOR COMMUNICATIONS AND SIGNAL ABBREVIATION, SYMBOLS, MOUNTING HEIGHTS, AND DRAWING LIST, REFER TO DRAWING ES001.

2. REFER TO DETAIL 2/ES501 FOR TYPICAL TELEDATA FACEPLATE AND DEVICES.

DRAWING NOTES:

1. COORDINATE INSTALLATION OF TELECOM OUTLETS IN MILLWORK WITH ARCHITECT.

2. COORDINATE LOCATION OF OUTLET WITH OWNER AND FINAL WAY-FINDER LOCATION.

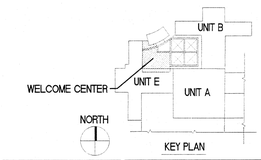

Revisions	Date
ISSUE 1 - ISSUE FOR CONSTRUCTION	04.30.2013
95 % SUBMISSION	02.17.2012
75 % SUBMISSION	03.16.2011
25 % SUBMISSION	10.29.2010

CONSULTANTS:

DISTRICT OF COLUMBIA REGISTERED PROFESSIONAL ENGINEER 10 [illegible] 510

ARCHITECT/ENGINEERS:

EWING COLE
1025 Connecticut Avenue, NW
Suite 900
Washington, DC 20036-5405
Tel: 202-467-1500 Fax: 202-296-8950

Drawing Title: PARTIAL GROUND FLOOR PLAN TELECOMM AND SIGNAL - NEW WORK

Approved Project Director

Project Title: OIF / OEF WELCOME CENTER DEPARTMENT OF VETERANS AFFAIRS VAMC

Location: Veterans Affairs Medical Center, 50 Irving Street NW Washington DC

Date: 4-30-2013 | Checked: - | Drawn: AK

Project Number: 688-334 OIF/OEF

Building Number

Drawing Number: EST101

Office of Construction and Facilities Management

Department of Veterans Affairs

VA FORM 08-6231

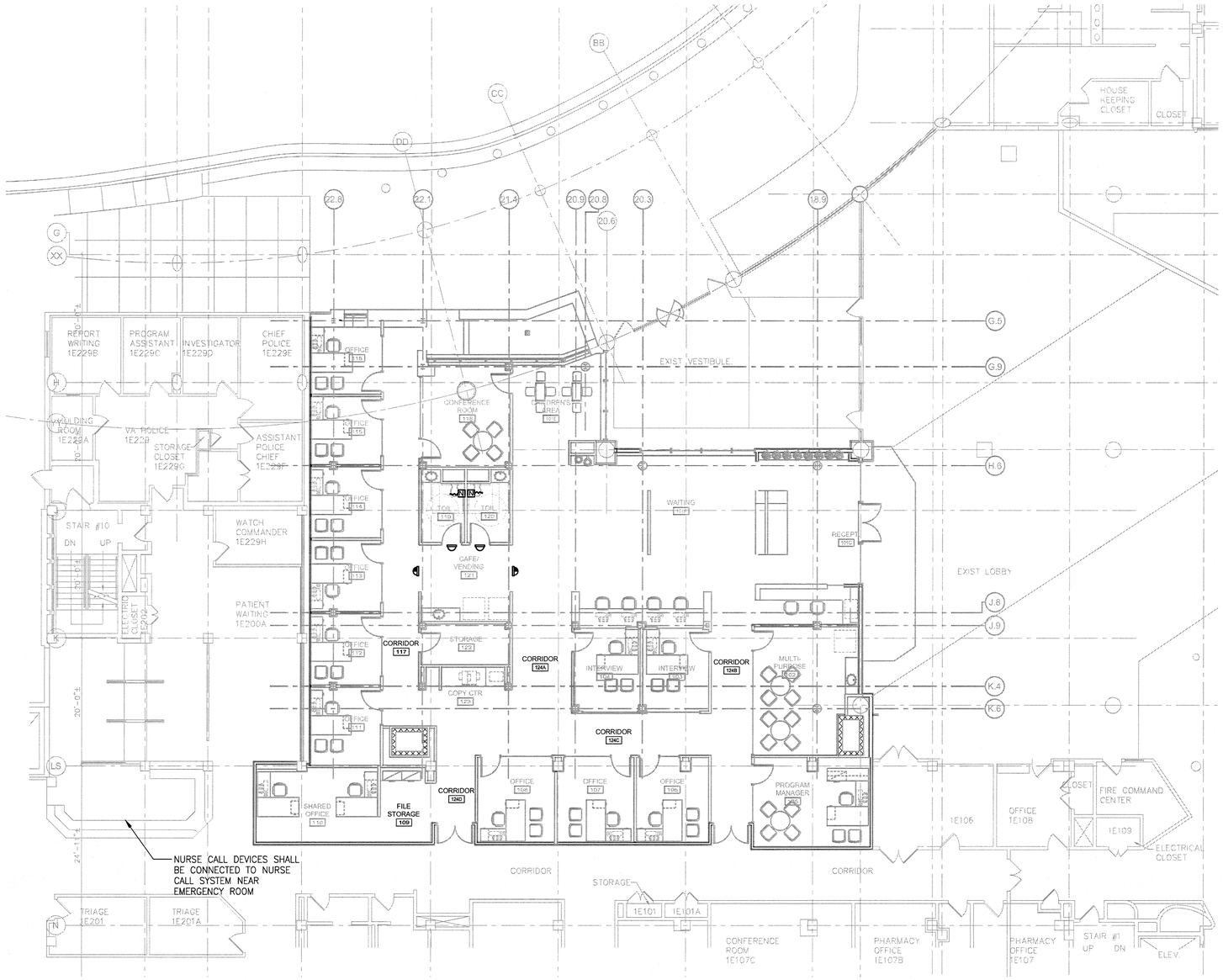

1 PARTIAL GROUND FLOOR PLAN - NURSE CALL - NEW WORK
SCALE: 1/8" = 1'-0"

NURSE CALL NOTES:

1. THE EXISTING NURSE CALL SYSTEM SHALL BE EXTENDED AS REQUIRED TO FACILITATE NEW CONSTRUCTION TO PROVIDE A COMPLETE OPERATIONAL SYSTEM IN COMPLIANCE WITH ALL APPLICABLE CODES.
2. NEW COMPONENTS SHALL BE FUNCTIONALLY AND ELECTRICALLY COMPATIBLE WITH EXISTING SYSTEM SO COMPONENTS AND WIRING OPERATE AS AN EXTENSION OF THE EXISTING SYSTEM AND ALL FUNCTIONAL PERFORMANCE OF THE EXISTING SYSTEM APPLIES TO THE FINAL SYSTEM. COLORS, TONES, TYPES, AND DURATIONS OF SIGNAL MANIFESTATION ARE COMMON BETWEEN NEW AND EXISTING SYSTEMS.
3. COORDINATE THE FEATURES OF MATERIALS AND EQUIPMENT TO FORM AN INTEGRATED SYSTEM. MATCH COMPONENTS AND INTERCONNECTIONS FOR OPTIMUM PERFORMANCE OF SPECIFIED FUNCTIONS.
4. OBTAIN NURSE CALL EQUIPMENT COMPONENTS THROUGH ONE SOURCE FROM THE EXISTING SYSTEM MANUFACTURER.
5. CONTRACTOR SHALL INSTALL WIRING IN RACEWAY EXCEPT WITHIN CONSOLES, DESKS, AND COUNTERS. CABLE WIRING METHODS MAY BE USED IN ACCESSIBLE CEILING SPACES AND IN GYPSUM BOARD PARTITIONS. UL-LISTED PLENUM CABLE SHALL BE USED IN ENVIRONMENTAL AIR SPACES, INCLUDING PLENUM CEILINGS. CONCEAL CABLE AND RACEWAY WIRING EXCEPT IN UNFINISHED SPACES.
6. AFTER INSTALLATION CONTRACTOR SHALL TEST ALL DEVICES AND ENSURE PROPER OPERATION. ENGAGE A FACTORY-AUTHORIZED SERVICE REPRESENTATIVE TO INSPECT, TEST, AND ADJUST FIELD-ASSEMBLED COMPONENTS AND EQUIPMENT INSTALLATION, INCLUDING CONNECTIONS, AND TO ASSIST IN FIELD TESTING. REPORT RESULTS IN WRITING.

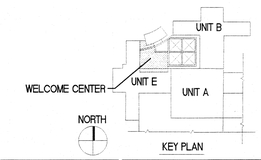

KEY PLAN

Revisions	Date
ISSUE 1 - ISSUE FOR CONSTRUCTION	04.30.2013
95 % SUBMISSION	02.17.2012
75 % SUBMISSION	03.16.2011
25 % SUBMISSION	10.29.2010

CONSULTANTS:

ARCHITECT/ENGINEERS:

EWING COLE
1025 Connecticut Avenue, NW
Suite 900
Washington, DC 20036-5405
Tel: 202-467-1500 Fax: 202-296-8950

Drawing Title: PARTIAL GROUND FLOOR PLAN NURSE CALL - NEW WORK

Approved Project Director

Project Title: OIF / OEF WELCOME CENTER DEPARTMENT OF VETERANS AFFAIRS VAMC

Location: Veterans Affairs Medical Center, 50 Irving Street NW Washington DC

Date: 4-30-2013 | Checked: - | Drawn: AK

Project Number: 688-334 OIF/OEF

Building Number

Drawing Number: ESY101

Office of Construction and Facilities Management

Department of Veterans Affairs

VA FORM 08-6231

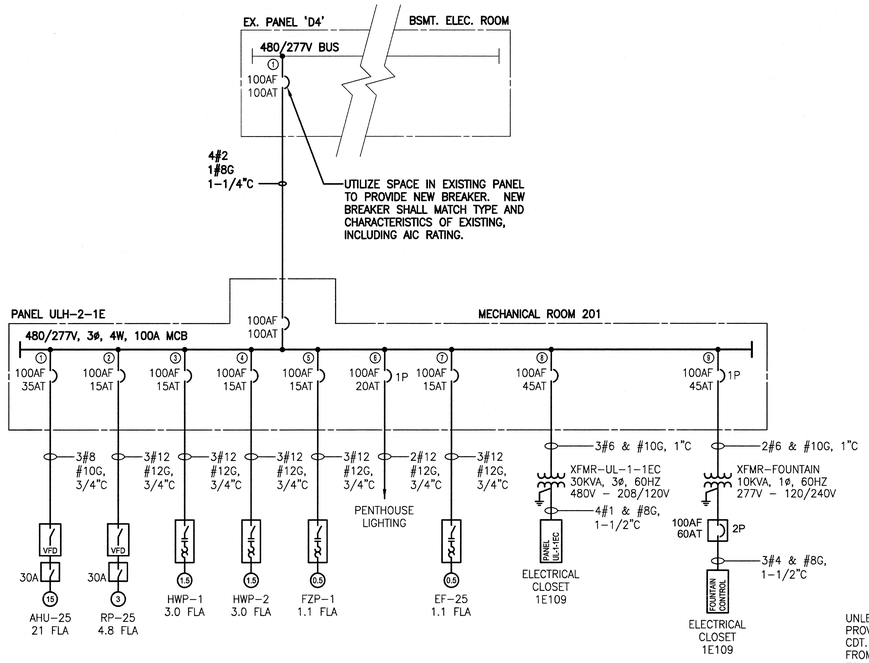

1 NORMAL DISTRIBUTION SINGLE LINE
SCALE: N.T.S.

NOTES:

1. VFD'S SHALL BE FURNISHED BY DIV. 23 CONTRACTOR AND INSTALLED BY DIV. 26 CONTRACTOR. TESTING AND ACCEPTANCE SHALL BE BY DIV. 23 CONTRACTOR.

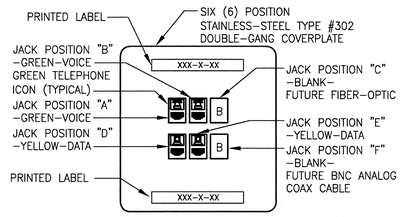

2 STANDARD VOICE/DATA OUTLET - TYPE A OUTLET
SCALE: N.T.S.

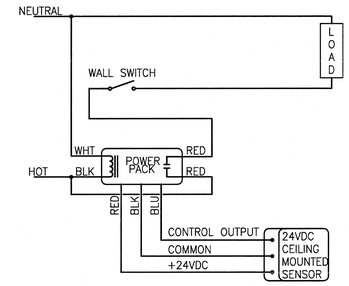

3 TYPICAL CEILING MOUNTED OCCUPANCY SENSOR WIRING DIAGRAM
SCALE: NONE

THIS DETAIL IS DIAGRAMMATIC ONLY. REFER TO MANUFACTURER INSTALLATION INSTRUCTIONS FOR EXACT WIRING AND CONNECTION REQUIREMENTS.

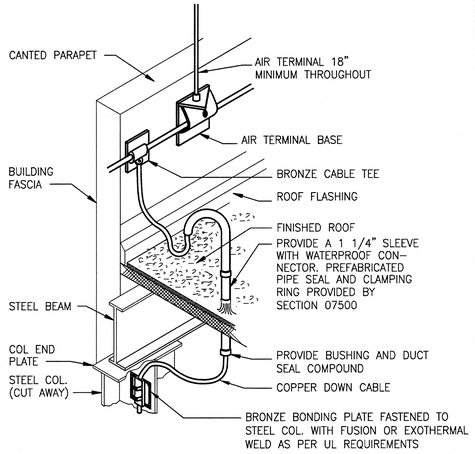

4 LIGHTNING PROTECTION CONNECTION AT ROOF
SCALE: N.T.S.

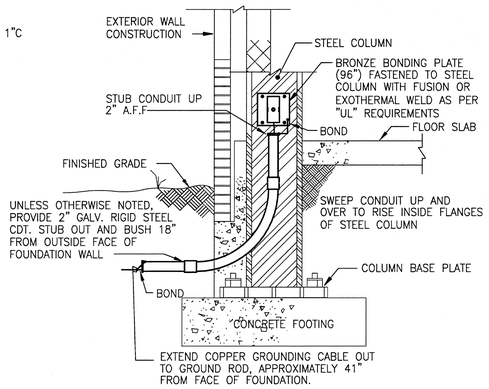

5 LIGHTNING PROTECTION CONNECTION AT GRADE
SCALE: N.T.S.

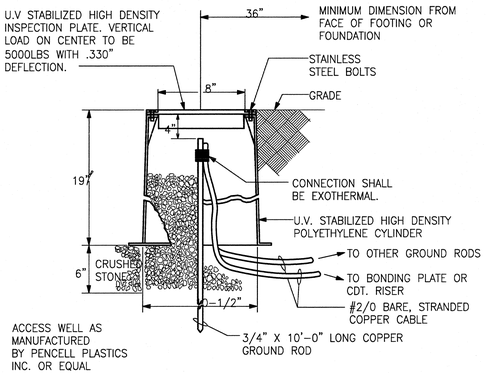

6 GROUND ROD ACCESS WELL
SCALE: N.T.S.

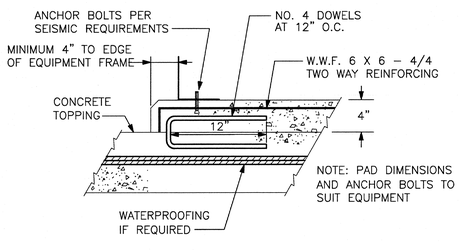

7 HOUSEKEEPING PAD (NEW SLAB)
SCALE: N.T.S.

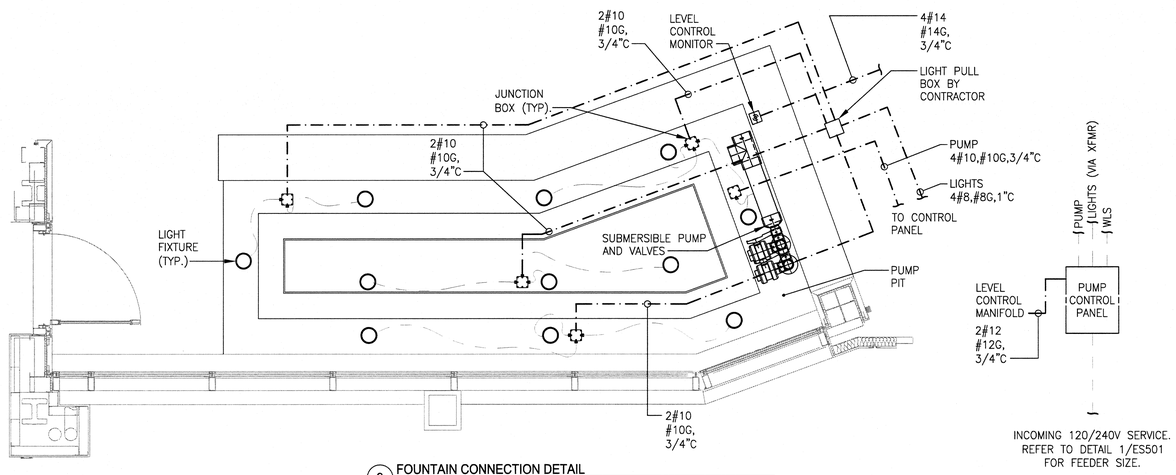

9 FOUNTAIN CONNECTION DETAIL
SCALE: 1/2" = 1'-0"

NOTES:

1. LIGHTS, MOTORS, CONTROL PANEL, AND ALL OTHER ITEMS SHOWN SHALL BE FURNISHED BY FOUNTAIN MANUFACTURER. DIVISION 26 CONTRACTOR SHALL PROVIDE ALL INTERCONNECTIONS NECESSARY FOR PROPER OPERATION. COORDINATE WITH INSTALLER FOR ALL REQUIREMENTS.

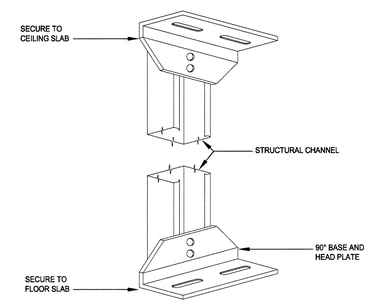

8 STRUCTURAL CHANNEL BASE & HEAD: PANELBOARD MOUNTING
SCALE: N.T.S.

GENERAL NOTE:

1. FOR ELECTRICAL SYMBOLS, ABBREVIATIONS AND MOUNTING HEIGHTS REFER TO DRAWING ES001.

Revisions:	Date
ISSUE 1 - ISSUE FOR CONSTRUCTION	04.30.2013
95 % SUBMISSION	02.17.2012
75 % SUBMISSION	03.16.2011
25 % SUBMISSION	10.29.2010

CONSULTANTS:

DISTRICT OF COLUMBIA, SAMIR ALCARAZ, NO. 900510, REGISTERED PROFESSIONAL ENGINEER

ARCHITECT/ENGINEERS:

EWING COLE
1025 Connecticut Avenue, NW
Suite 900
Washington, DC 20036-5405
Tel: 202-467-1500 Fax: 202-296-8950

Drawing Title: ELECTRICAL DETAILS

Approved Project Director

Project Title: OIF / OEF WELCOME CENTER DEPARTMENT OF VETERANS AFFAIRS VAMC

Location: Veterans Affairs Medical Center, 50 Irving Street NW Washington DC

Date: 4-30-2013 | Checked: - | Drawn: AK

Project Number: 688-334 OIF/OEF

Building Number

Drawing Number: ES501

Office of Construction and Facilities Management

Department of Veterans Affairs

VA FORM 08-6231

LUMINAIRE SCHEDULE

TYPE	DESCRIPTION	MANUFACTURER	CATALOG NUMBER	LAMP NO.	LAMP TYPE	LAMP WATTS	BALLAST NO.	BALLAST TYPE	VOLTAGE	MOUNTING	NOTES
A1	2'X2', 3-LAMP, VOLUMETRIC LUMINAIRE WITH ROUND PERFORATED SHIELDING IN FROSTED DIFFUSER.	CORE-LITE LITHONIA APPROVED EQUAL	R2-WP-3N5-1C-22-UNV-T1 APPROVED EQUAL APPROVED EQUAL	3	F14T5 4100K, 82 CRI	14	1	ELEC	UNV	RECESSED GRID	
A2	2'X4', 3-LAMP, VOLUMETRIC LUMINAIRE WITH ROUND PERFORATED SHIELDING IN FROSTED DIFFUSER AND STEP DIMMING BALLAST	CORE-LITE LITHONIA APPROVED EQUAL	R2-WP-2N5-1C-24-UNV-T1 APPROVED EQUAL APPROVED EQUAL	2	F28T5 4100K, 82 CRI	28	1	ELEC	UNV	RECESSED GRID	
A2A	SAME AS TYPE 'A2', BUT WITH PROGRAM RAPID START BALLAST	CORE-LITE LITHONIA APPROVED EQUAL	R2-WP-2N5-1C-24-UNV-T1 APPROVED EQUAL APPROVED EQUAL	2	F28T5 4100K, 82 CRI	28	1	ELEC	UNV	RECESSED GRID	
C1	6" RECESSED SQUARE LED DOWNLIGHT WITH, AND SOFT SPECULAR CLEAR ALZAK TRIM	INDY GOTHAM APPROVED EQUAL	SDSQ6-20-40-SAF-2 APPROVED EQUAL APPROVED EQUAL		LED	33	1	DRIVER	MVOLT	RECESSED	
D1	4', ONE-LAMP FLOURESCENT UNDERCABINET FIXTURE WITH ROCKER SWITCH.	KENALL ALKCO APPROVED EQUAL	AUCDL-X-MW-48-RS-120-SW APPROVED EQUAL APPROVED EQUAL	1	F28T5 4100K, 82 CRI	28	1	ELEC	120	UNDERCAB.	1
D2	4' VERTICAL RECESSED WALL MOUNT FLUORESCENT MIRROR LUMINAIRE, SATINE LENS, WHITE TRIM	SELUX GAMMALUX PINNACLE	M60-1T5-SD-SF*-004-WH-277-DL APPROVED EQUAL APPROVED EQUAL	1	F28T5 4100K, 82 CRI	28	1	ELEC	277	WALL MOUNTED VERTICAL RECESSED	2,6
D3	2-LAMP, WALL MOUNTED FLUORESCENT FIXTURE WITH ACRYLIC PRISMATIC LENS AND PROGRAM START ELECTRONIC BALLAST	METALUX LITHONIA APPROVED EQUAL	B1-232-UNV-ERT81 WP-232-MVOLT-GEB10PS APPROVED EQUAL	2	F32T8 4100K, 82 CRI	32	1	ELEC	MVOLT	WALL	6
D4	WALL MOUNTED COMPACT FLUORESCENT VAPORPROOF FIXTURE W/CLEAR GLASS GLOBE, GUARD, AND GREY FINISH	CANLET LUMARK APPROVED EQUAL	6802-42-0G-09 PL-VS-W-CG-42-UNV APPROVED EQUAL	1	42 TRT 4100K, 80 CRI	42	1	ELEC	120	WALL	
J1	4' LONG CONCEALED, 1-LAMP FLUORESCENT COVE UNIT WITH INTEGRAL BALLAST AND REFLECTOR	LITECONTROL APPROVED EQUAL	CC-A1-25-1-4-T5H0-CWM-LP/ELB-1CWQ-277 APPROVED EQUAL	1	F54T5HO 4100K, 82 CRI	54	1	ELEC	277	COVE	4,7
J2	SAME AS 'J1' FIXTURE, BUT WITH T5 FLUORESCENT LAMP	LITECONTROL APPROVED EQUAL	CC-A1-25-1-4-T5-CWM-LP/ELB-1CWQ-277 APPROVED EQUAL	1	F28T5 4100K, 82 CRI	28	1	ELEC	277	COVE	4,7
N1	2-LAMP, COMPACT FLUORESCENT WALL PACK FIXTURE W/DIE CAST ALUMINUM HOUSING, IMPACT RESISTANT LENS, FULL-CUTOFF SHIELD, AND PHOTOELECTRIC CONTROL	LUMARK LITHONIA APPROVED EQUAL	CF-WP-FC-64-277V-PE TWF1-2/32TRT-MVOLT-CW20-PE APPROVED EQUAL	2	32W TRT 4100K, 80 CRI	32	1	ELEC	277	EXTERIOR WALL	3
T1	CHAIN HUNG, 2-LAMP, FLUORESCENT INDUSTRIAL FIXTURE WITH SOLID REFLECTOR AND WIRE GUARD	METALUX LITHONIA APPROVED EQUAL	DCIM-232-120-ER8 AFST-232-120-GEB10RS APPROVED EQUAL	2	F32T8	32	1	ELEC	277	CHAIN HUNG	
X1	LED EDGE-LIT EXIT SIGN WITH BRUSHED ALUMINUM RECESSED HOUSING, RED LETTERING, SINGLE OR DOUBLE FACE AND CHEVRONS AS REQUIRED.	COOPER LITHONIA APPROVED EQUAL	EEX-7 SERIES APPROVED EQUAL APPROVED EQUAL		LED	3		DRIVER	UNV	UNIVERSAL	5

NOTES:
1. COORDINATE WITH DRAWINGS FOR INDIVIDUAL AND SERIES MOUNT QUANTITIES.
2. TRIM AND FINISH AS SPECIFIED BY ARCHITECT.
3. PROVIDE LOW TEMPERATURE, ELECTRONIC BALLAST.
4. LENGTHS AS SHOWN ON DRAWINGS.
5. WALL MOUNT EXIT SIGNS WHENEVER POSSIBLE. CEILING MOUNTED EXIT SIGNS MUST HAVE RECESSED HOUSINGS.
6. CONFIRM MOUNTING HEIGHT WITH ARCHITECT.
7. PROVIDE CORNER WIRING KITS AS REQUIRED.

PANEL: ELH-1-1E EMERGENCY
SECTION: 1 OF 1
LOCATION: ELECTRICAL CLOSET 1E202
VOLTAGE: 480/277V
PHASE & WIRE: 3 PH, 4W
MAIN (AMPS): 100A, M.L.O.
[ ] NEW
[X] EXISTING
KAIC RATING: 10
POLES: 42

wire size	CKT NO.	C.B. A	C.B. P	DESCRIPTION	LOAD (KVA)	A	B	C	LOAD (KVA)	DESCRIPTION	C.B. A	C.B. P	CKT NO.	wire size
	1					0.00							2	
	3	70	3	MAIN			0.00			(EX)15KVA XFMR TO EX PANEL EUL-1-1E	30	3	4	
	5							0.00					6	
	7	20	1	EXISTING LOAD		0.00				EXISTING LOAD	20	1	8	
	9	20	1	EXISTING LOAD			0.00			EXISTING LOAD	20	1	10	
	11	20	1	EXISTING LOAD				0.00		EXISTING LOAD	20	1	12	
	13	20	1	EXISTING LOAD		0.00				EXISTING LOAD	20	1	14	
	15	20	1	EXISTING LOAD			0.00			EXISTING LOAD	20	1	16	
	17	20	1	EXISTING LOAD				0.00		EXISTING LOAD	20	1	18	
1	19	20	1	(N) GENERAL LTG. - WELCOME CENTER	0.54	0.54				EXISTING LOAD	20	1	20	
1	21	20	1	(N) OFFICE LTG. - WELCOME CENTER	2.70		2.70			EXISTING LOAD	20	1	22	
1,2	23	20	1	(N) GENERAL LTG - WELCOME CENTER	2.80			2.80		EXISTING LOAD	20	1	24	
	25			SPACE		0.00				SPACE			26	
	27			SPACE			0.00			SPACE			28	
	29			SPACE				0.00		SPACE			30	
	31			SPACE		0.00				SPACE			32	
	33			SPACE			0.00			SPACE			34	
	35			SPACE				0.00		SPACE			36	
	37			SPACE		0.00				SPACE			38	
	39			SPACE			0.00			SPACE			40	
	41			SPACE				0.00		SPACE			42	
				LOAD SUMMARY PER PHASE (KVA)		0.54	2.70	2.80						
				TOTAL CONNECTED LOAD (KVA)		6.04								

OPTIONS AND ACCESSORIES - (X) INDICATES SELECTION
[ ] MULTIPLE SECTION PANEL
[ ] RECESSED
[X] SURFACE
[ ] 200% RATED NEUTRAL
[ ] ISOLATED GROUND BUS
CONTACTOR CONTROLLED [ ]
FEED THRU LUGS [ ]
SUB FEED MAIN LUGS (DOUBLE LUGS) [ ]
CONTROLLABLE CIRCUIT BREAKER PANEL [ ]
OTHER [ ]
ISSUE DATE: REVISION DATE:

PANEL: UL-1-1EC
SECTION: 1 OF 1
LOCATION: ELECTRICAL CLOSET 1E109
VOLTAGE: 208/120V
PHASE & WIRE: 3 PH, 4W
MAIN (AMPS): 100A, M.C.B.
[X] NEW
[ ] EXISTING
KAIC RATING: 10
POLES: 42

wire size	CKT NO.	C.B. A	C.B. P	DESCRIPTION	LOAD (KVA)	A	B	C	LOAD (KVA)	DESCRIPTION	C.B. A	C.B. P	CKT NO.	wire size
	1	20	1	RECEPT - RM 115, 116	1.08	0.00			1.08	RECEPT - RM 113, 114	20	1	2	
	3	20	1	RECEPT - RM 111, 112	1.08		0.00		1.08	RECEPT - RM 109, 110	20	1	4	
	5	20	1	RECEPT - RM 107, 108	1.08			1.80	0.72	RECEPT - RM 106	20	1	6	
	7	20	1	RECEPT - RM 118	0.90	2.00			1.10	RECEPT - VENDING RM 121	20	1	8	
	9	20	1	RECEPT - VENDING RM 121	1.10		1.46		0.36	RECEPT - WAITING RM 101A	20	1	10	
	11	20	1	RECEPT - WAITING RM 101A	0.36			1.44	1.08	RECEPT - RM 103, 104	20	1	12	
	13	20	1	RECEPT - CORRIDOR	0.90	1.98			1.08	RECEPT - RM 105	20	1	14	
	15	20	1	RECEPT - REFRIG RM 102	1.10		1.82		0.72	RECEPT - RM 102	20	1	16	
	17	20	1	RECEPT - CORRIDOR, RM 122	0.90			1.80	0.90	RECEPT - PRINTER RM 123	20	1	18	
	19	20	1	RECEPT - COPIER RM 123	1.20	2.10			0.90	RECEPT - CORRIDOR, RM 101E	20	1	20	
	21	20	1	RECEPT - ELEC WATER COOLER	0.80		1.52		0.72	RECEPT - RECEPTION 101C	20	1	22	
	23	20	1	RECEPT - RECEPTION	0.54			1.26	0.72	RECEPT - ROOFTOP	20	1	24	
	25	20	1	UNIT HEATERS - PENTHOUSE	0.05	0.55			0.50	DDC PANEL - PENTHOUSE	20	1	26	
	27	20	1	LIGHTING - AHU-25	0.20		0.74		0.54	REC - CONDENSATE PUMPS	20	1	28	
	29	20	1	VAV BOXES	1.00			2.00	1.00	VAV BOXES	20	1	30	
	31	20	1	SPARE		0.00				SPARE	20	1	32	
	33	20	1	SPARE			0.00			SPARE	20	1	34	
	35	20	1	SPARE				0.00		SPARE	20	1	36	
	37	20	1	SPARE		0.00				SPARE	20	1	38	
	39	20	1	SPARE			0.00			SPARE	20	1	40	
	41	20	1	SPARE				0.00		SPARE	20	1	42	
				LOAD SUMMARY PER PHASE (KVA)		6.63	5.54	8.30						
				TOTAL CONNECTED LOAD (KVA)		20.47								

OPTIONS AND ACCESSORIES - (X) INDICATES SELECTION
[ ] MULTIPLE SECTION PANEL
[ ] RECESSED
[X] SURFACE
[ ] 200% RATED NEUTRAL
[ ] ISOLATED GROUND BUS
CONTACTOR CONTROLLED [ ]
FEED THRU LUGS [ ]
SUB FEED MAIN LUGS (DOUBLE LUGS) [ ]
CONTROLLABLE CIRCUIT BREAKER PANEL [ ]
OTHER [ ]
ISSUE DATE: REVISION DATE:

PANEL: LSM-1
SECTION: 1 OF 1
LOCATION: FIRE COMMAND CENTER
VOLTAGE: 208/120V
PHASE & WIRE: 3 PH, 4W
MAIN (AMPS): 100A, M.L.O.
[ ] NEW
[X] EXISTING
KAIC RATING: 10
POLES: 20

wire size	CKT NO.	C.B. A	C.B. P	DESCRIPTION	LOAD (KVA)	A	B	C	LOAD (KVA)	DESCRIPTION	C.B. A	C.B. P	CKT NO.	wire size
	1	20	1	(EX)FIRE ALARM CONTROL PANEL		0.00				(EX)RECEPT - FIRE COMMAND CENTER	20	1	2	
	3	20	1	(EX)RECEPT - FIRE COMMAND CENTER			0.00			(EX)RECEPT	20	1	4	
	5	20	1	(N) STROBE POWER EXTENDER PANEL	0.50			0.50		SPARE	20	1	6	
	7	20	1	SPARE		0.00				SPARE	20	1	8	
	9	20	1	SPARE			0.00			SPARE	20	1	10	
	11	20	1	SPARE				0.00		SPARE	20	1	12	
	13			SPACE		0.00				SPACE			14	
	15			SPACE			0.00			SPACE			16	
	17			SPACE				0.00		SPACE			18	
	19			SPACE		0.00				SPACE			20	
				LOAD SUMMARY PER PHASE (KVA)		0.00	0.00	0.50						
				TOTAL CONNECTED LOAD (KVA)		0.50								

OPTIONS AND ACCESSORIES - (X) INDICATES SELECTION
[ ] MULTIPLE SECTION PANEL
[ ] RECESSED
[X] SURFACE
[ ] 200% RATED NEUTRAL
[ ] ISOLATED GROUND BUS
CONTACTOR CONTROLLED [ ]
FEED THRU LUGS [ ]
SUB FEED MAIN LUGS (DOUBLE LUGS) [ ]
CONTROLLABLE CIRCUIT BREAKER PANEL [ ]
OTHER [ ]
ISSUE DATE: REVISION DATE:

PANEL SCHEDULE NOTES:
1. PROVIDE NEW 20A/1P BRANCH CIRCUIT BREAKER IN EXISTING SPACE.
2. CONNECT TO AUTOMATIC TIMECLOCK. REFER TO SHEET EL101.

MECHANICAL EQUIPMENT COORDINATION SCHEDULE

SYMBOL (EQUIPMENT IDENTIFICATION)	DESCRIPTION	PHYSICAL LOCATION	MOTOR TYPE AND STARTER REQUIREMENTS (SEE NOTE 4) (ELECTRICAL EQUIPMENT CHARACTERISTICS)	HP	FLA	KW	VOLTS-Ø	UNFUSED SWITCH (LOCAL DISCONNECT DEVICE)	FUSED SWITCH	FHP MAN. MOTOR SWITCH w/o OL	FHP MAN. MOTOR SWITCH w/ OL	FHP MAN. MOTOR SWITCH HOA SW	FHP MAN. MOTOR SWITCH PILOT	PROVIDED BY DIV
AHU-25 (SF)	AIR HANDLING UNIT - SUPPLY FAN	MECH PENTHOUSE	E	15	21.0	17.5	480V-P3H	X						26
AHU-25 (RF)	AIR HANDLING UNIT - RETURN FAN	MECH PENTHOUSE	E	3	4.8	4.0	480V-3PH	X						26
EF-25	EXHAUST FAN	MECH PENTHOUSE	A	0.5	1.1	0.9	480V-3PH							
HWP-1	HOT WATER PUMP	MECH PENTHOUSE	A	1.5	3.0	2.5	480V-3PH							
HWP-2	HOT WATER PUMP	MECH PENTHOUSE	A	1.5	3.0	2.5	480V-3PH							
FZP-1	FREEZE PROTECTION PUMP	MECH PENTHOUSE	A	0.5	1.1	0.9	480V-3PH							
UH-1	UNIT HEATER	MECH PENTHOUSE	A			16W	120V-1PH				X			26
UH-2	UNIT HEATER	MECH PENTHOUSE	A			16W	120V-1PH				X			26

SYMBOL	STARTER TYPE MAN.	STARTER TYPE MAG.	STARTER TYPE VFD	COMBINATION MCP	COMBINATION SW UNF	COMBINATION SW FU	ACCESSORIES ON OFF SW	ACCESSORIES PB	ACCESSORIES HOA SW	ACCESSORIES PILOT	FURNISHED BY DIV/ INSTALL BY	PHYSICAL LOCATION	REMOTE CONTROL STATION (SEE NOTE 6) NEMA ENCL.	SURFACE OR FLUSH MOUNTING	TYPE	PROVIDED BY DIV	EMERGENCY POWER REQUIRED	CONTROL WIRING BY DIV.25 U.O.N.	REMARKS	REVISION NUMBER
AHU-25 (SF)			X								23/26	AT UNIT							Disconnect switches between the VFD output and driven motor shall include a dry contact auxiliary switch that will open upon moving disconnect switch to the "off" position. This contact shall be wired into the VFD safety circuit per manufacturer's specifications.	
AHU-25 (RF)			X								23/26	AT UNIT								
EF-25			X		X						23/26	AT UNIT								
HWP-1			X		X						26/26	AT UNIT								
HWP-2			X		X						26/26	AT UNIT								
FZP-1			X		X						26/26	AT UNIT								
UH-1																				
UH-2																				

Revisions	Date
ISSUE 1 - ISSUE FOR CONSTRUCTION	04.30.2013
95 % SUBMISSION	02.17.2012
75 % SUBMISSION	03.16.2011
25 % SUBMISSION	10.29.2010

CONSULTANTS:

DISTRICT OF COLUMBIA
MARY ALCARAZ
NO. 901510
REGISTERED PROFESSIONAL ENGINEER

ARCHITECT/ENGINEERS:

EWING COLE
1025 Connecticut Avenue, NW
Suite 900
Washington, DC 20036-5405
Tel: 202-467-1500 Fax: 202-296-8950

Drawing Title: ELECTRICAL SCHEDULES

Approved: Project Director

Project Title: OIF / OEF WELCOME CENTER DEPARTMENT OF VETERANS AFFAIRS VAMC

Location: Veterans Affairs Medical Center, 50 Irving Street NW Washington DC

Date	Checked	Drawn
4-30-2013	-	AK

Project Number: 688-334 OIF/OEF

Building Number:

Drawing Number: ES601

Office of Construction and Facilities Management

Department of Veterans Affairs

VA FORM 08-6231

\\ewingcole.com\projectshare\20100592\ELEC\Drawings\ES601.dwg, 4/27/2013 1:21:14 PM, Massott, Joe