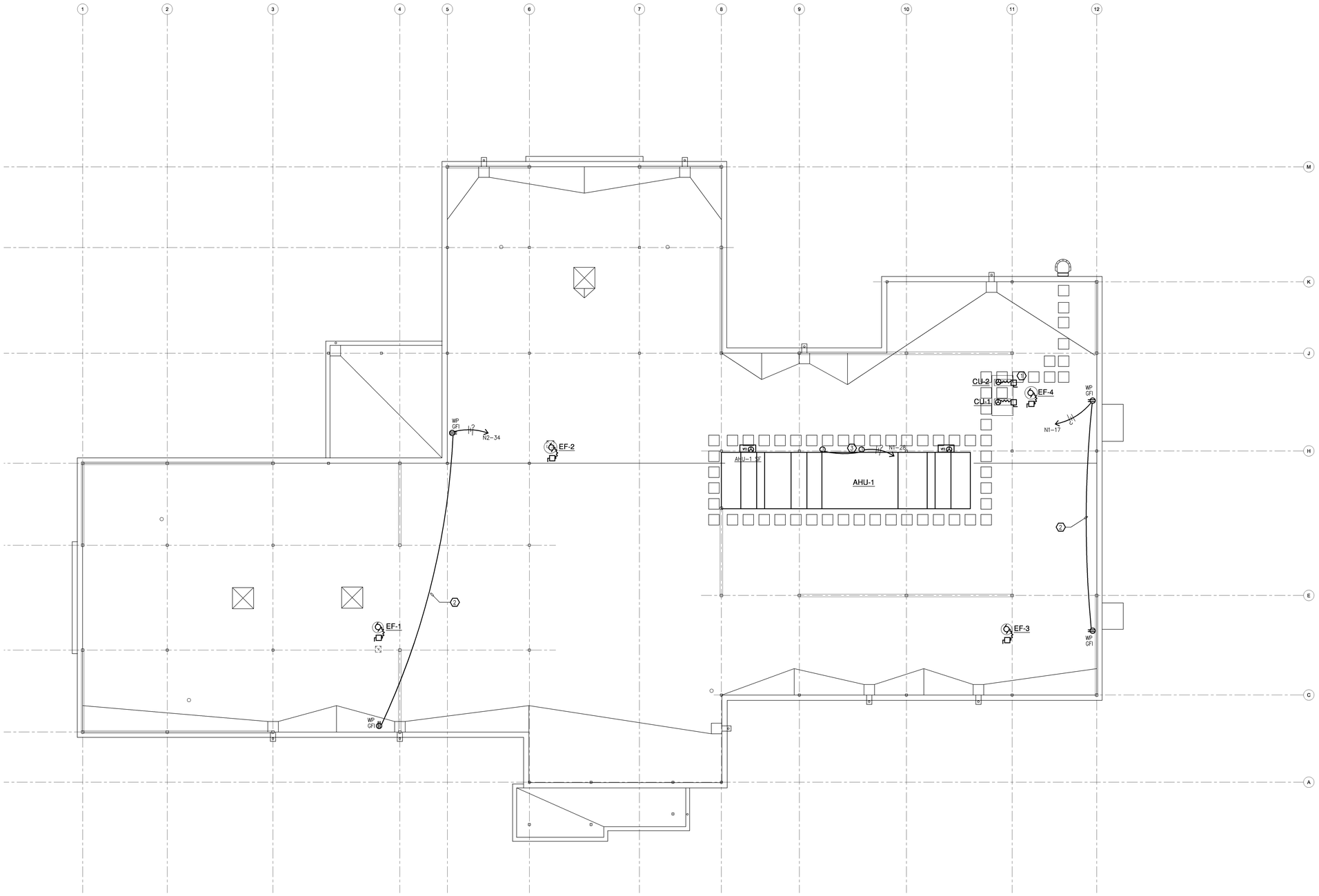

GENERAL NOTES:

1. REFER TO MECHANICAL EQUIPMENT CONNECTION SCHEDULE FOR CIRCUITING INFORMATION ON ALL MECHANICAL EQUIPMENT.

SHEET NOTES:

1. SEE DETAIL ON SHEET 2/ES-105 FOR CONNECTION DETAIL BETWEEN INSIDE AND OUTSIDE UNIT.
2. ROUTE CONDUIT IN CEILING SPACE BELOW.
3. POWER CONNECTION FOR LIGHTING AND OUTLETS OF AHU-1 SERVICE AREA. ELECTRICAL CONTRACTOR TO PROVIDE WIRING UP TO J-BOX.

1 ROOF PLAN - ELECTRICAL

SCALE: 1/8"=1'-0"

Revisions:	Date

CONSULTANT

BALZHISER & HUBBARD ENGINEERS
MECHANICAL • ELECTRICAL • CIVIL • SURVEYORS
100 WEST 13TH AVENUE EUGENE, OR 97401
P: 541-686-8678
F: 541-343-5921
2100-031-10es-103.dwg

STAMP

REGISTERED PROFESSIONAL ENGINEER 50476
DIGITAL SIGNATURE
OREGON
JULY 21, 1989
KEVIN M. WARE
EXPIRES 6/30/14

ARCHITECT

Tina Ely Architect
2915 Wingate Street / Eugene, OR 97408
541 . 521 . 2477 / TinaEly@comcast.net
www.TinaElyArch.com

Drawing Title: ROOF PLAN - ELECTRICAL

Approved: Project Director

Project Title: SEISMIC REPLACEMENT BLDG 2 PHASE 1 MINOR ACUTE PSYCHIATRIC WARD

Location: ROSEBURG, OREGON

Date: 31 MAY 2013 | Checked: KMW | Drawn: JSG

VA Project Number: 653-322

Building Number: 086

Sheet Number: ES-103

Office of Construction and Facilities Management

Department of Veterans Affairs

VA FORM 08-6231

LUMINAIRE SCHEDULE

TYPE	DESCRIPTION	MANUFACTURER	LAMP	BALLAST	MOUNTING	FINISH	REMARKS
A	NOMINAL 24" X 48" RECESSED 2 LAMP FLUORESCENT LUMINAIRE WITH PERFORATED LAMP SHIELD, 16 GAUGE HOUSING, ONE PIECE 16 GAUGE DOOR FRAME, AND 0.187" CLEAR POLYCARBONATE LENS	KENALL MMAC24 SERIES	F32T8/830	ELECTRONIC PROGRAM START 0.71 BF	RECESSED - FLANGE	WHITE	TORX CENTER PIN REJECT FASTENERS
B4	NOMINAL 12" X 3.5" X 48" PENDANT MOUNTED 3 LAMP FLUORESCENT WITH 60/40 DISTRIBUTION AND MICRO-IMPREGNATED ACRYLIC SUBSTRATE LENS MATERIAL	LEDALITE 7306 SERIES	F32T8/830	ELECTRONIC PROGRAM START 0.88 BF	PENDANT - FULLY ADJUSTABLE AIRCRAFT CABLE	WHITE	
BD	NOMINAL 12" X 3.5" x 96" PENDANT MOUNTED 2 LAMP FLUORESCENT WITH 60/40 DISTRIBUTION AND MICRO-IMPREGNATED ACRYLIC SUBSTRATE LENS MATERIAL AND 0-10VDC DIMMING BALLAST	LEDALITE 7306 SERIES	F32T8/830	ELECTRONIC PROGRAM START DIMMING 0.88 BF	PENDANT - FULLY ADJUSTABLE AIRCRAFT CABLE	WHITE	
C	NOMINAL 2.5" X 5.5" X 48" SURFACE MOUNTED FLUORESCENT COVE LUMINAIRE WITH ASYMMETRIC SPECULAR REFLECTOR AND INTEGRAL REFLECTOR	ELLIPTIPAR 305 SERIES	F54T5HO	ELECTRONIC 0-10VDC DIMMING	SURFACE - COVE	N/A	
D1	NOMINAL 6" RECESSED LED DOWNLIGHT WITH SELF FLANGING SEMI SPECULAR TRIM WITH TORX HEAD FASTENERS	GOTHAM VRALED SERIES	3000K 1000lm	INTEGRAL ELECTRONIC DRIVER	RECESSED	N/A	
D2	NOMINAL 6" RECESSED LED DOWNLIGHT WITH DIE CAST ALUMINUM TRIM WITH TEMPERED GLASS PRISMATIC LENS WITH TORX HEAD FASTENERS	GOTHAM VRALED SERIES	3000K 1000lm	INTEGRAL ELECTRONIC DIMMING DRIVER	RECESSED	N/A	
D3	NOMINAL 6" RECESSED LED DOWNLIGHT WITH SELF FLANGING SEMI SPECULAR TRIM	WILA 621 763 SERIES	3000K 2000lm REMOTE PHOSPHOR LIGHT ENGINE	INTEGRAL ELECTRONIC 0-10VDC DIMMING DRIVER	RECESSED	N/A	
D4	NOMINAL 4" RECESSED LED DOWNLIGHT WITH 60 DEG SEMI-SPECULAR OPTIC AND FROSTED FLOATING GLASS LENS	WILA 621 543 DFS SERIES	3000K 1000lm REMOTE PHOSPHOR LIGHT ENGINE	INTEGRAL ELECTRONIC DRIVER	RECESSED	N/A	
D5	NOMINAL 4" RECESSED LED DOWNLIGHT WITH 60 DEG SEMI-SPECULAR OPTIC AND FROSTED GLASS LENS	WILA 621 543 CFP SERIES	3000K 1000lm REMOTE PHOSPHOR LIGHT ENGINE	INTEGRAL ELECTRONIC DRIVER	RECESSED	N/A	
D6	NOMINAL 4" RECESSED LED 40 DEGREE DOWNLIGHT WITH LOW IRIDESCENT SEMI-SPECULAR SELF FLANGING ALZAK REFLECTOR	WILA 621 343 SERIES	3000K 400lm REMOTE PHOSPHOR LIGHT ENGINE	INTEGRAL ELECTRONIC DRIVER	RECESSED	N/A	
D7	NOMINAL 4" RECESSED LED 40 DEGREE DOWNLIGHT WITH LOW IRIDESCENT SEMI-SPECULAR SELF FLANGING ALZAK REFLECTOR	WILA 621 543 SERIES	3000K 1000lm REMOTE PHOSPHOR LIGHT ENGINE	INTEGRAL ELECTRONIC DRIVER	RECESSED	N/A	
D8	NOMINAL 8" SQUARE SURFACE MOUNTED DIE CAST ALUMINUM LED DOWNLIGHT WITH ETCHED TEMPERED GLASS LENS AND INTERGRAL DRIVER	BEGA 6920LED	28.8W LED/4000K	INTERGRAL ELECTRONIC DRIVER	SURFACE	TBD ARCHITECT	
EX1	SEMI-RECESSED LED EXIT SIGN WITH GREEN ON CLEAR LETTERS	LITHONIA LRP SERIES	GREEN LED	INTEGRAL	SEMI-RECESSED - AS NOTED ON LIGHTING PLANS	WHITE	CONSULT DRAWINGS FOR MOUNTING CONDITIONS PRIOR TO ORDERING
EX2	NOMINAL 12" X 16" RECESSED LED EXIT SIGN WITH DIE FORMED FRAME AND TAMPER RESISTANT FASTENERS	KENALL METSR SERIES	GREEN LED	INTEGRAL ELECTRONIC DRIVER	SEMI-RECESSED	WHITE	TORX CENTER PIN REJECT FASTENERS
F1	NOMINAL 24" X 48" RECESSED 2 LAMP FLUORESCENT LUMINAIRE WITH MICRO-IMPREGNATED ACRYLIC SUBSTRATE LENS MATERIAL	LEDALITE 9124 SERIES	F32T8/830	ELECTRONIC PROGRAM START 0.71 BF	RECESSED	WHITE	
F2	NOMINAL 24" X 48" RECESSED 3 LAMP FLUORESCENT LUMINAIRE WITH MICRO-IMPREGNATED ACRYLIC SUBSTRATE LENS MATERIAL AND ELECTRONIC BI-LEVEL BALLAST	LEDALITE 9122 SERIES	F17T8/830	ELECTRONIC PROGRAM START BI-LEVEL 0.87 - 0.34	RECESSED	WHITE	
F3	NOMINAL 24" X 48" RECESSED 2 LAMP FLUORESCENT WITH 0.156" ACRYLIC LENS	LITHONIA 2SP SERIES	F32T8/830	ELECTRONIC PROGRAM START 0.71 BF	RECESSED	WHITE	
F4	NOMINAL 9" X 48" DIE FORMED STEEL 1 LAMP FLUORESCENT WITH CONTINUOUS PIANO HINGE ON DOOR FRAME AND 0.156" A19 ACRYLIC LENS	NULITE 20 SERIES	F32T8/830	ELECTRONIC PROGRAM START 0.71 BF	RECESSED	WHITE	
F7	NOMINAL 6.5" X 13.5" X 48" PENDANT MOUNTED 2 LAMP FLUORESCENT INDUSTRIAL TURRET WITH 20% UPLIGHT	LITHONIA AF SERIES	F32T8/830	ELECTRONIC PROGRAM START 0.71 BF	PENDANT - CHAIN	WHITE	
F8	NOMINAL 24" X 24" RECESSED 3 LAMP FLUORESCENT WITH 0.156" ACRYLIC LENS	LITHONIA 2SP SERIES	F17T8/830	ELECTRONIC PROGRAM START 0.71 BF	RECESSED	WHITE	
F9	NOMINAL 48" SURFACE MOUNTED 2 LAMP FLUORESCENT WITH WRAP AROUND ACRYLIC LENS	LITHONIA LB SERIES	F32T8/830	ELECTRONIC PROGRAM START 0.71 BF	SURFACE	WHITE	
G	CEILING MOUNTED 50.000 LUX LED EXAM LIGHT WITH ARTICULATING ARM	STERIS HARMONY LED385 SERIES	5000K CRI > 90	INTEGRAL ELECTRONIC DRIVER	SURFACE - CEILING	STD	
H4	NOMINAL 3.5" RECESSED 1 LAMP IN CROSS SECTION FLUORESCENT WITH HIGH TRANSMISSION LAMP OBFUSCATING LENS	A LIGHT D5 ACCOLADE SERIES	F32T8/830	ELECTRONIC PROGRAM START 0.71 BF	RECESSED	STD	
H8	NOMINAL 3.5" RECESSED 1 LAMP IN CROSS SECTION FLUORESCENT WITH HIGH TRANSMISSION LAMP OBFUSCATING LENS	A LIGHT D5 ACCOLADE SERIES	F32T8/830	ELECTRONIC PROGRAM START 0.71 BF	RECESSED	STD	
H12	NOMINAL 3.5" RECESSED 1 LAMP IN CROSS SECTION FLUORESCENT WITH HIGH TRANSMISSION LAMP OBFUSCATING LENS	A LIGHT D5 ACCOLADE SERIES	F32T8/830	ELECTRONIC PROGRAM START 0.71 BF	RECESSED	STD	
HW16	NOMINAL 3.5" RECESSED 1 LAMP IN CROSS SECTION FLUORESCENT WITH HIGH TRANSMISSION LAMP OBFUSCATING LENS	A LIGHT D5 ACCOLADE SERIES	F32T8/830	ELECTRONIC PROGRAM START 0.71 BF	RECESSED - COMPATIBLE WITH WOOD CEILING	STD	
K	NOMINAL 9" X 24" RECESSED DIE FORMED STEEL 1 LAMP FLUORESCENT WITH CONTINUOUS PIANO HINGE ON DOOR FRAME AND 0.156" A19 ACRYLIC LENS	NULITE 20 SERIES	F17T8/830	ELECTRONIC PROGRAM START 0.71 BF	RECESSED	WHITE	TORX CENTER PIN REJECT FASTENERS
L	NOMINAL 7" 3/4 X 2" X 144" 2 LAMP IN CROSS SECTION LINEAR FLUORESCENT PENDANT WITH 0-10VDC ELECTRONIC DIMMING BALLAST	LEDALITE 4806 SERIES	F28T5/830	ELECTRONIC DIMMING BALLAST	PENDANT - FULLY ADJUSTABLE AIRCRAFT CABLE	STD	
M	NOMINAL 3" X 5" RECESSED AMBER LED STEP LIGHT WITH CLEAR POLYCARBONATE LENS AND INTERNAL LOUVER	KENALL MSLS SERIES	AMBER LED	ELECTRONIC DRIVER - ADJUSTABLE 100% - 40%	RECESSED	WHITE	TORX CENTER PIN REJECT FASTENERS
N	NOMINAL 31" X 34" 2 LAMP FLUORESCENT DECORATIVE PENDANT WITH WASHABLE DIFFUSER AND TOP AND BOTTOM ACRYLIC LENS	LUMETTA P53T3431 SERIES	F42TRT/830	ELECTRONIC BALLAST	PENDANT	TBD ARCHITECT	

TYPE	DESCRIPTION	MANUFACTURER	LAMP	BALLAST	MOUNTING	FINISH	REMARKS
	ALUMINUM LED STEPLIGHT WITH INTEGRAL DRIVER, 30 DEG. ANGLED LOUVER AND TEMPERED GLASS LENS	SSL-LED SERIES			CONCRETE POUR		REJECT FASTENERS
T	NOMINAL 6" X 39" EXTRUDED ALUMINUM LED BOLLARD WITH DIE CAST HEAD	BEGA 8554LED SERIES	18W LED/4000K	INTEGRAL ELECTRONIC DRIVER	GROUND MTD - CONCRETE BASE	TBD ARCHITECT	
U	EXTERIOR 2 LAMP COMPACT FLUORESCENT WALL BRACKET	LITHONIA TWF1	42TRT/4000K	ELECTRONIC	SURFACE	STD	
V1	NOMINAL 24" SURFACE MOUNTED 1 LAMP FLUORESCENT VANITY SCONCE WITH WHITE ACRYLIC DIFFUSER	VISA CB 6504 SERIES	F17T8/830	ELECTRONIC	SURFACE	WHITE	
W2	NOMINAL 6.5" X 4.75" SURFACE MOUNTED DIE CAST ALUMINUM LED WALL BRACKET WITH BOROSILICATE GLASS LENS	BEGA 3245LED SERIES	2OW LED 4000K	INTEGRAL ELECTRONIC DRIVER	SURFACE	TBD ARCHITECT	
W3	NOMINAL 12" X 4" X 3" SURFACEM MOUNTED DIE CAST ALUMINUM LED WALL BRACKET WITH ETCHED TEMPERED GLASS	BEGA 2380 LED SERIES	12W LED 4000K	INTEGRAL ELECTRONIC DRIVER	SURFACE	TBD ARCHITECT	
Y	NOMINAL4" X 4" X 52" SURFACE MOUNTED EXTRUDED ALUMINUM 1 LAMP FLUORESCENT WITH SATIN ACRYLIC LENS	AXIS WBS SERIES	F32T/840	ELECTRONIC	SURFACE	TBD ARCHITECT	WET LOCATION LISTED
Z	NOMINAL 17" X 12" X 6" POLE MOUNTED LED TYPE III AREA LIGHT	KIM SAR SERIES	4000K	ELECTRONIC DRIVER	4" X 20' ROUND ALUMINUM POLE	MATCH CAMPUS STANDARD	

OCCUPANCY SENSOR SCHEDULE

TYPE	MODEL	TECHNOLOGY	MOUNTING	POWER PACK
A	PW-100	180° PASSIVE INFRARED	WALL SWITCH	NONE
B	DT-200	180° PASSIVE INFRARED, ULTRASONIC	CEILING/WALL	REQUIRED
C	DT-300	360° PASSIVE INFRARED, ULTRASONIC	CEILING	REQUIRED
D	UT-355	360° ULTRASONIC	CEILING	NONE
E	W-2000	360° ULTRASONIC	CEILING	REQUIRED

GENERAL NOTES:
1 BASIS OF DESIGN: WATTSTOPPER
2 REFER TO LIGHTING PLANS FOR OCCUPANCY SENSOR LOCATIONS.

LIGHTING CONTROL PANEL SCHEDULE

ID: LCP
Voltage: 120
Location: Electrical Room E123
Supply Circuit: LS1 - 9
Normal Interruption Circuit: N1 - 24

Relay	Panelboard	Circuit	Control	Room / Number / Zone	Load (VA)	Notes	Relay	Panelboard	Circuit	Control	Room / Number / Zone	Load (VA)	Notes
EMERGENCY													
1	LS1	28	TC / OS	HALL & VESTIBULE	460	1,4,5	2	LS1	16	TC / S_{LV}	BUILDING EXTERIOR	200	6
3	LS1	28	TC / OS	HALL & VESTIBULE	460	1,4,5	4						7
5	LS1	14	TC	EXT/SECURE CT.	150	6	6						7
7						7	8						7
9						7	10						7
11						7	12						7
NORMAL													
13	N1	30	TC / S_{LV}	MECH. YARD	470	2,3	14						7
15	N1	30	TC	LANDSCAPE LIGHTING	90	6	16						7

KEY: TC = TIME CLOCK / OS = OCCUPANCY SENSOR / S_{LV} = LOW VOLTAGE SWITCH / PC = PHOTOCELL

GENERAL NOTES:
1. UPON LOSS OF NORMAL POWER, ALL LIGHTS IDENTIFIED AS EMERGENCY SHALL AUTOMATICALLY TURN ON.

NOTES:
1. LIGHTS ON AT 6:30AM, OFF AT 6:30PM, VERIFY SCHEDULE WITH OWNER.
2. RELAY OPERATED BY LOCAL CONTROL STATIONS AFTER OCCUPIED HOURS.
3. SWEEP LIGHTS OFF AT 2 HOUR INTERVALS AFTER ACTIVATING RELAY.
4. RELAY OPERATED BY OCCUPANCY SENSOR AFTER NORMALLY OCCUPIED HOURS.
5. RELAY OPERATED BY OCCUPANCY SENSOR DURING NORMALLY OCCUPIED HOURS.
6. LIGHTS ON AT DUSK, OFF AT DAWN, VERIFY SCHEDULE WITH OWNER.
7. SPARE RELAY
8.

Revisions:	Date

CONSULTANT

BALZHISER & HUBBARD ENGINEERS
MECHANICAL • ELECTRICAL • CIVIL • SURVEYORS
100 WEST 13TH AVENUE EUGENE, OR 97401 P: 541-686-8678 F: 541-345-3067
2100–031–10es–104.1.dwg

STAMP
REGISTERED PROFESSIONAL ENGINEER 50476 OREGON JULY 21, 1989 KEVIN M. WARE
DIGITAL SIGNATURE
EXPIRES 6/30/14

ARCHITECT
Tina Ely Architect
2915 Wingate Street / Eugene, OR 97408
541 . 521 . 2477 / TinaEly@comcast.net
www.TinaElyArch.com

Drawing Title: LUMINAIRE, OCCUPANCY SENSOR, AND LIGHTING CONTROL SCHEDULES

Approved: Project Director

Project Title: SEISMIC REPLACEMENT BLDG 2 PHASE 1 MINOR ACUTE PSYCHIATRIC WARD

Location: ROSEBURG, OREGON

Date: 31 MAY 2013 | Checked: KMW | Drawn: GCH

VA Project Number: 653-322
Building Number: 086
Sheet Number: ES-104.1

Office of Construction and Facilities Management
Department of Veterans Affairs

VA FORM 08-6231

PANEL SCHEDULE

PANEL: PANEL N1
VOLTS: 120/208
LOCATION: ELECTRICAL ROOM
MOUNTING: SURFACE
NOTES:

TYPE: NEMA1 AMPS: 100
PHASE: 3 WIRE: 4
MAIN: MLO

DATE: May 31, 2013
PROJECT:

LOAD CLASS	Conn. VA	Demand Factor	Demand Load VA
LIGHTING	1476	125%	1845
OUTLETS	1080	*	1080
MOTOR LOADS	17424	**	19602
RESISTANCE LOADS	120	100%	120
SUBFEED	0	100%	0
MISC. LOADS	4354	100%	4354
SUBFEED BREAKER	0		0

	Connected	Demand
TOTAL VOLT-AMPS	24,454	27,001
MAXIMUM PHASE AMPS	69.1	76.7

BREAKER A	P	DESCRIPTION	WATTS	CIR. NO.	PHASE	CIR. NO.	WATTS	DESCRIPTION	BREAKER P	A
40	3	CHWP-1	2904	1	A	2		SPARE	1	20
			2904	3	B	4				
			2904	5	C	6	1352	CU-2	2	30
40	3	CHWP-2	2904	7	A	8	1352			
			2904	9	B	10		SPACE		
			2904	11	C	12		SPACE		
20	1	RECEPT - EXTERIOR	360	13	A	14		SPACE		
20	1	EXTERIOR OUTLET	360	15	B	16		SPACE		
20	1	ROOF OUTLETS	360	17	C	18		SPACE		
20	1	ENVIRO SERVICES OUTLETS		19	A	20	160	LTG: RM. A106, B103, C106	1	20
20	1	MECH ROOM OUTLETS		21	B	22	235	LTG: RM. E121 & E124	1	20
20	1	IRRIGATION CONTROLLER - MECH YARD		23	C	24	50	LCP NORMAL INTERRUPT	1	20
20	1				A	26	235	LTG: RM. E125-E128	1	20
20	1	FMT-1	600	27	B	28	1000	AHU-1 LIGHTING CIRCUIT, OUTLET	1	20
20	1	UH-1	120	29	C	30	470	LTG: LCP, RELAY 13 & 15	1	20
20	1	SPARE		31	A	32	376	LTG: RM. E122 & E123	1	20
20	1	SPARE		33	B	34		SPARE	1	20
20	1	SPARE		35	C	36		SPARE	1	20
20	1	SPARE		37	A	38		SPARE	1	20
20	1	SPARE		39	B	40		SPARE	1	20
20	1	SPARE		41	C	42		SPARE	1	20

PHASE TOTALS	A	B	C
Connected VA	8291	8003	8160
Demand VA	9210	8788	9004
Connected Amps	69.1	66.7	68.0
Demand Amps	76.7	73.2	75.0

* 10kVA at 100%, remainder at 50%
** 100% plus 25% of the largest Motor

PANEL SCHEDULE

PANEL: PANEL N2
VOLTS: 120/208
LOCATION: HALLWAY
MOUNTING: FLUSH
NOTES:

TYPE: NEMA 1 AMPS: 150
PHASE: 3 WIRE: 4
MAIN: MLO

DATE: May 31, 2013
PROJECT:

LOAD CLASS	Conn. VA	Demand Factor	Demand Load VA
LIGHTING	0	125%	0
OUTLETS	9700	*	9700
MOTOR LOADS	0	**	0
RESISTANCE LOADS	5800	100%	5800
SUBFEED	0	100%	0
MISC. LOADS	12800	100%	12800
SUBFEED BREAKER	0		0

	Connected	Demand
TOTAL VOLT-AMPS	28,300	28,300
MAXIMUM PHASE AMPS	84.8	84.8

BREAKER A	P	DESCRIPTION	WATTS	CIR. NO.	PHASE	CIR. NO.	WATTS	DESCRIPTION	BREAKER P	A
20	1	NURSE WORKSTATION OUTLETS	720	1	A	2	600	WATER FEATURE	1	20
20	1	NURSE WORKSTATION OUTLETS	720	3	B	4	720	PATIENT CONSULTATION OUTLETS	1	20
20	1	NURSE WORKSTATION OUTLETS	720	5	C	6	540	PATIENT GROUP EDUCATION OUTLET	1	20
20	1	HALLWAY OUTLETS	720	7	A	8	900	HALL OUTLETS	1	20
20	1	SPARE		9	B	10		SPARE	1	20
20	1	OUTLETS	540	11	C	12		SPARE	1	20
50	2	DRYER	2500	13	A	14	800	DINING	1	20
			2500	15	B	16	800	DINING	1	20
20	1	WASHER	1000	17	C	18	1000	REF	1	20
20	1	OUTLETS	540	19	A	20	600	WATER FEATURE	1	20
20	1	SPARE		21	B	22		SPARE	1	20
20	1	SPARE	540	23	C	24		SPARE	1	20
20	1	SPARE	600	25	A	26	1000	MICROWAVE	1	20
20	1	SPARE	600	27	B	28	2900	OVEN	2	40
20	1	AV RACK	600	29	C	30	2900			
20	1	AV RACK	600	31	A	32	600	FLAT PANEL TV	1	20
20	1	FLAT PANEL TV	600	33	B	34	360	ROOF OUTLET	1	20
20	1	PT LIBRARY	720	35	C	36	360	OULTET FOOD CART	1	20
20	1	SPARE		37	A	38		ICE MAKER	1	20
20	1	SPARE		39	B	40		SPARE	1	20
20	1	SPARE		41	C	42		SPARE	1	20

PHASE TOTALS	A	B	C
Connected VA	10180	9200	8920
Demand VA	10180	9200	8920
Connected Amps	84.8	76.7	74.3
Demand Amps	84.8	76.7	74.3

* 10kVA at 100%, remainder at 50%
** 100% plus 25% of the largest Motor

PANEL SCHEDULE

PANEL: PANEL N3
VOLTS: 120/208
LOCATION: HALLWAY
MOUNTING: FLUSH
NOTES:

TYPE: NEMA 1 AMPS: 150
PHASE: 3 WIRE: 4
MAIN: MLO

DATE: May 31, 2013
PROJECT:

LOAD CLASS	Conn. VA	Demand Factor	Demand Load VA
LIGHTING	1814	125%	2268
OUTLETS	14860	*	12430
MOTOR LOADS	0	**	0
RESISTANCE LOADS	0	100%	0
SUBFEED	0	100%	0
MISC. LOADS	3100	100%	3100
SUBFEED BREAKER	0		0

	Connected	Demand
TOTAL VOLT-AMPS	19,774	17,798
MAXIMUM PHASE AMPS	56.9	51.5

BREAKER A	P	DESCRIPTION	WATTS	CIR. NO.	PHASE	CIR. NO.	WATTS	DESCRIPTION	BREAKER P	A
20	1	MANAGER OFFICE RECEPTACLES	720	1	A	2	720	STAFF OFFICE RECEPTACLES	1	20
20	1	STAFF OFFICE RECEPTACLES	720	3	B	4	720	STAFF OFFICE RECEPTACLES	1	20
20	1	STAFF OFFICE RECEPTACLES	720	5	C	6	720	STAFF OFFICE RECEPTACLES	1	20
20	1	HALL RECEPTACLES	720	7	A	8	720	SOILED LINEN UTILITY	1	20
20	1	STORAGE RECEPTACLES	900	9	B	10	540	MEDS ROOM RECEPTACLES	1	20
20	1	CLEAN UTILITY, LINEN	500	11	C	12	900	HALL RECEPTACLES	1	20
20	1	SPARE	800	13	A	14	720	STAFF CONFERENCE RECEPTACLES	1	20
20	1	SPARE	900	15	B	16	540	STAFF CONFERENCE RECEPTACLES	1	20
20	1	SPARE	360	17	C	18	900	SPARE	1	20
20	1	SPARE	180	19	A	20	600	SPARE	1	20
20	1	LOUNGE REF	600	21	B	22	1000	PLUG MOLD - STORAGE	1	20
20	1	LOUNGE REF	600	23	C	24	726	LTG: RM C103,C104,A104, STAFF OFFICES	1	20
20	1	LOUNGE RECETACLE	800	25	A	26	540	LTG: RM E119 & E120	1	20
20	1	NURSE HALL OUTLETS	360	27	B	28	548	LTG: RM E102,E103, E110-E114, E118	1	20
20	1	PT-MEDICAL TREATMENT OUTLET		29	C	30	1000	COLD/HOT WATER DISPENSER	1	20
20	1	SPARE		31	A	32		SPARE	1	20
20	1	SPARE		33	B	34		SPARE	1	20
20	1	SPARE		35	C	36		SPARE	1	20
20	1	SPARE		37	A	38		SPARE	1	20
20	1	SPARE		39	B	40		SPARE	1	20
20	1	SPARE		41	C	42		SPARE	1	20

PHASE TOTALS	A	B	C
Connected VA	6520	6828	6426
Demand VA	5677	6183	5937
Connected Amps	54.3	56.9	53.6
Demand Amps	47.3	51.5	49.5

* 10kVA at 100%, remainder at 50%
** 100% plus 25% of the largest Motor

PANEL SCHEDULE

PANEL: PANEL LS1
VOLTS: 120/208
LOCATION: ELECTRICAL ROOM
MOUNTING: SURFACE
NOTES:

TYPE: NEMA1 AMPS: 150
PHASE: 3 WIRE: 4
MAIN: 100

DATE: May 31, 2013
PROJECT:

LOAD CLASS	Conn. VA	Demand Factor	Demand Load VA
LIGHTING	8782	125%	10978
OUTLETS	180	*	180
MOTOR LOADS	0	**	0
RESISTANCE LOADS	0	100%	0
SUBFEED	0	100%	0
MISC. LOADS	3075	100%	3075
SUBFEED BREAKER	0		0

	Connected	Demand
TOTAL VOLT-AMPS	12,037	14,233
MAXIMUM PHASE AMPS	40.5	48.4

BREAKER A	P	DESCRIPTION	WATTS	CIR. NO.	PHASE	CIR. NO.	WATTS	DESCRIPTION	BREAKER P	A
20	1			1	A	2	450	LTG: RM. C105, C107 (DOWNLIGHTS)	1	20
20	1	SPARE		3	B	4	1806	LTG: RM. C107 (COVE LIGHTS)	1	20
20	1	LTG: RM. C123 & C137	370	5	C	6	1414	LTG: RM. C122, C125 (COVE LIGHTS)	1	20
20	1	SPARE		7	A	8	400	LTG: RM. C122, C125 (DOWNLIGHTS)	1	20
20	1	PWR SUPPLY: LCP	75	9	B	10	756	LTG: RM. C105 (COVE LIGHTS)	1	20
20	1	GENERATOR BATTERY CHARGER	1000	11	C	12	1386	LTG: RM. C101, C122, C134 (COVE LIGHTS)	1	20
20	1	GENRATOR BATTERY WARMER	1000	13	A	14	150	LCP, RELAY 5	1	20
20	1	GENERATOR HEATER CIRCUIT	1000	15	B	16	200	LCP, RELAY 2	1	20
20	1	SPARE		17	C	18		SPARE	1	20
20	1	GENERATOR SERVICE OUTLET	180	19	A	20		SPARE	1	20
20	1	FIRE ALARM PANEL		21	B	22	100	EXIT SIGNS	1	20
20	1	SPARE		23	C	24	100	EXIT SIGNS	1	20
20	1	SPARE		25	A	26	730	LTG: RM. A101, A102, A105	1	20
20	1	SPARE		27	B	28	920	LCP, RELAYS 1 & 3	1	20
20	1	SPARE		29	C	30		SPARE	1	20
20	1	SPARE		31	A	32		SPARE	1	20
20	1	SPARE		33	B	34		SPARE	1	20
20	1	SPARE		35	C	36		SPARE	1	20
20	1	SPARE		37	A	38		SPARE	1	20
20	1	SPARE		39	B	40		SPARE	1	20
20	1	SPARE		41	C	42		SPARE	1	20

PHASE TOTALS	A	B	C
Connected VA	2910	4857	4270
Demand VA	3343	5803	5088
Connected Amps	24.3	40.5	35.6
Demand Amps	27.9	48.4	42.4

* 10kVA at 100%, remainder at 50%
** 100% plus 25% of the largest Motor

PANEL SCHEDULE

PANEL: PANEL CR1
VOLTS: 120/208
LOCATION: ELECTRICAL ROOM
MOUNTING: SURFACE
NOTES:

TYPE: NEMA 1 AMPS: 400
PHASE: 3 WIRE: 4
MAIN: 325

DATE: May 31, 2013
PROJECT:

LOAD CLASS	Conn. VA	Demand Factor	Demand Load VA
LIGHTING	430	125%	538
OUTLETS	0	*	0
MOTOR LOADS	81064	**	94114
RESISTANCE LOADS	100	100%	100
SUBFEED	14639	100%	14639
MISC. LOADS	4700	100%	4700
SUBFEED BREAKER	0		0

	Connected	Demand
TOTAL VOLT-AMPS	100,933	114,091
MAXIMUM PHASE AMPS	287.8	324.0

BREAKER A	P	DESCRIPTION	WATTS	CIR. NO.	PHASE	CIR. NO.	WATTS	DESCRIPTION	BREAKER P	A
20	3	HWP-1	900	1	A	2	420	B-1, BCP-1	1	15
			900	3	B	4	2600	CU-1	2	40
			900	5	C	6	2600			
20	3	HWP-2	900	7	A	8	420	B2, BCP-2	3	15
			900	9	B	10	240	FCU-1,FCU-2	1	15
			900	11	C	12		SPARE	1	20
15	1	WH-2	100	13	A	14	17400	AHU-SUPPLY	3	200
15	1	SPARE		15	B	16	17400			
15	1	EF-1	696	17	C	18	17400			
15	1	EF-2	696	19	A	20	4800	AHU-RETURN	3	50
15	1	EF-3	696	21	B	22	4800			
15	1	EF-4	696	23	C	24	4800			
20	1	BAS CONTROL PANEL	1000	25	A	26	430	LTG: D103-D106	1	20
20	1	BAS CONTROL PANEL	1000	27	B	28	200	WH-1	1	20
20	1	FAUCET SENSORS	600	29	C	30	200	DP-1	1	20
20	1	FMT-1	400	31	A	32	100	WATER METERS	1	20
20	1	FUEL TANK ALARM	400	33	B	34	800	BOILER CONTROL PANEL	1	20
20	1	SPARE		35	C	36		SPARE	1	20
125	3	PANEL CR-2	5220	37	A	38		SPARE	1	20
			4599	39	B	40		SPARE	1	20
			4820	41	C	42		SPARE	1	20

PHASE TOTALS	A	B	C
Connected VA	32786	34535	33612
Demand VA	37244	38885	37962
Connected Amps	273.2	287.8	280.1
Demand Amps	310.4	324.0	316.4

* 10kVA at 100%, remainder at 50%
** 100% plus 25% of the largest Motor

PANEL SCHEDULE

PANEL: PANEL CR2
VOLTS: 120/208
LOCATION: PT CONSULTANT CLOSET
MOUNTING: FLUSH
NOTES:

TYPE: NEMA 1 AMPS: 125
PHASE: 3 WIRE: 4
MAIN: MLO

DATE: May 31, 2013
PROJECT:

LOAD CLASS	Conn. VA	Demand Factor	Demand Load VA
LIGHTING	5359	125%	6699
OUTLETS	6480	*	6480
MOTOR LOADS	0	**	0
RESISTANCE LOADS	0	100%	0
SUBFEED	0	100%	0
MISC. LOADS	2800	100%	2800
SUBFEED BREAKER	0		0

	Connected	Demand
TOTAL VOLT-AMPS	14,639	15,979
MAXIMUM PHASE AMPS	43.5	47.0

BREAKER A	P	DESCRIPTION	WATTS	CIR. NO.	PHASE	CIR. NO.	WATTS	DESCRIPTION	BREAKER P	A
20	1	NURSE WORKSTATION OUTLETS	720	1	A	2	400	LTG: RM. C108 & C109	1	20
20	1	NURSE WORKSTATION OUTLETS	720	3	B	4	400	LTG: RM. C110 & C111	1	20
20	1	NURSE WORKSTATION OUTLETS	720	5	C	6	500	LTG: RM. C112 & C113	1	20
20	1	WARD CLERK OUTLETS	720	7	A	8	500	LTG: RM. C114 & C115	1	20
20	1	NURSE WORKSTATION OUTLETS	360	9	B	10	400	LTG: RM. C116 & C117	1	20
20	1	SATELLITE NURSE STATION	360	11	C	12	400	LTG: RM. C118 & C119	1	20
20	1	PYXIS	1000	13	A	14	400	LTG: RM. C126 & C127	1	20
20	1	PYXIS	1000	15	B	16	500	LTG: RM. C128 & C129	1	20
20	1	MEDS ROOM REF	800	17	C	18	500	LTG: RM. C130 & C131	1	20
20	1	SATELLITE NURSE STATION	360	19	A	20	400	LTG: RM. C132 & C133	1	20
20	1	NURSE WORKSTATION OUTLETS	720	21	B	22	139	LTG: RM C135 & C136	1	20
20	1	NURSE WORKSTATION OUTLETS	720	23	C	24	820	LTG: RM B105-B109, C102	1	20
20	1	NURSE WORKSTATION OUTLETS	720	25	A	26	300	LTG: RM B104, C120, C121	1	20
20	1	CRASH CART OUTLET	360	27	B	28		SPARE	1	20
20	1	FAUCET SENSOR	300	29	C	30		SPARE	1	20
20	1	SPARE		31	A	32		SPARE	1	20
20	1	SPARE		33	B	34		SPARE	1	20
20	1	SPARE		35	C	36		SPARE	1	20
20	1	SPARE		37	A	38		SPARE	1	20
20	1	SPARE		39	B	40		SPARE	1	20
20	1	SPARE		41	C	42		SPARE	1	20

PHASE TOTALS	A	B	C
Connected VA	5220	4599	4820
Demand VA	5645	4959	5375
Connected Amps	43.5	38.3	40.2
Demand Amps	47.0	41.3	44.8

* 10kVA at 100%, remainder at 50%
** 100% plus 25% of the largest Motor

PANEL SCHEDULE

PANEL: MAIN EMERGENCY BOARD
VOLTS: 480/277
LOCATION: ELECTRICAL ROOM
MOUNTING: SURFACE
NOTES:

TYPE: AMPS: 150
PHASE: 3 WIRE: 4
MAIN: MLO

DATE: February 12, 2013
PROJECT:

LOAD CLASS	Conn. VA	Demand Factor	Demand Load VA
LIGHTING	0	125%	0
OUTLETS	0	*	0
MOTOR LOADS	0	**	0
RESISTANCE LOADS	0	100%	0
SUBFEED	83695	100%	83695
MISC. LOADS	0	100%	0
SUBFEED BREAKER	0		0

	Connected	Demand
TOTAL VOLT-AMPS	83,695	83,695
MAXIMUM PHASE AMPS	103.4	103.4

BREAKER A	P	DESCRIPTION	WATTS	CIR. NO.	PHASE	CIR. NO.	WATTS	DESCRIPTION	BREAKER P	A
135	3	PANEL CR-1	23954	1	A	2	4685	PANELS LS1	3	
			22903	3	B	4	4925			
			22424	5	C	6	4804			
				7	A	8				
				9	B	10				
				11	C	12				
				13	A	14				
				15	B	16				
				17	C	18				
				19	A	20				
				21	B	22				
				23	C	24				
				25	A	26				
				27	B	28				
				29	C	30				
				31	A	32				
				33	B	34				
				35	C	36				
				37	A	38				
				39	B	40				
				41	C	42				

PHASE TOTALS	A	B	C
Connected VA	28639	27828	27228
Demand VA	28639	27828	27228
Connected Amps	103.4	100.5	98.3
Demand Amps	103.4	100.5	98.3

* 10kVA at 100%, remainder at 50%
** 100% plus 25% of the largest Motor

PANEL SCHEDULE

PANEL: PANEL MDF
VOLTS: 120/208
LOCATION: MDF ROOM
MOUNTING: SURFACE
NOTES:

TYPE: NEMA 1 AMPS: 225
PHASE: 3 WIRE: 4
MAIN: MLO

DATE: May 31, 2013
PROJECT:

LOAD CLASS	Conn. VA	Demand Factor	Demand Load VA
LIGHTING	0	125%	0
OUTLETS	0	*	0
MOTOR LOADS	0	**	0
RESISTANCE LOADS	0	100%	0
SUBFEED	0	100%	0
MISC. LOADS	21120	100%	21120
SUBFEED BREAKER	0		0

	Connected	Demand
TOTAL VOLT-AMPS	21,120	21,120
MAXIMUM PHASE AMPS	63.0	63.0

BREAKER A	P	DESCRIPTION	WATTS	CIR. NO.	PHASE	CIR. NO.	WATTS	DESCRIPTION	BREAKER P	A
20	1	RACK MOUNTED OUTLET MDF	600	1	A	2	1500	MDF ROOM 30A OUTLET	2	30
20	1	RACK MOUNTED OUTLET MDF	600	3	B	4	1500			
20	1	RACK MOUNTED OUTLET MDF	600	5	C	6	1500	MDF ROOM 30A OUTLET	2	30
20	1	RACK MOUNTED OUTLET MDF	600	7	A	8	1500			
20	1	RACK MOUNTED OUTLET AV	600	9	B	10	1500	MDF ROOM 30A OUTLET	2	30
20	1	RACK MOUNTED OUTLET AV	600	11	C	12	1500			
20	1	SPARE	600	13	A	14	1500	MDF ROOM 30A OUTLET	2	30
20	1	MDF ROOM WALL OUTLETS	360	15	B	16	1500			
20	1	MDF ROOM WALL OUTLETS	360	17	C	18	600	AV OUTLET	2	30
20	1	SPARE		19	A	20	600	AV OUTLET		
20	1	SPARE		21	B	22	1500	IDF ROOM 30A OUTLET	2	30
20	1	SPARE		23	C	24	1500			
20	1	SPARE		25	A	26		SPACE		
20	1	SPARE		27	B	28		SPACE		
20	1	SPARE		29	C	30		SPACE		
20	1	SPARE		31	A	32		SPACE		
20	1	SPARE		33	B	34		SPACE		
20	1	SPARE		35	C	36		SPACE		
20	1	SPARE		37	A	38		SPACE		
20	1	SPARE		39	B	40		SPACE		
20	1	SPARE		41	C	42		SPACE		

PHASE TOTALS	A	B	C
Connected VA	6900	7560	6660
Demand VA	6900	7560	6660
Connected Amps	57.5	63.0	55.5
Demand Amps	57.5	63.0	55.5

* 10kVA at 100%, remainder at 50%
** 100% plus 25% of the largest Motor

MECHANICAL EQUIPMENT CONNECTION SCHEDULE

TAG	DESCRIPTION	VOLTAGE	PHASE	HP	KW	AMP	FEEDER DESCRIPTION	CIRCUIT BREAKER	STARTER	CIRCUIT	DISCONNECT	VFD	NOTES
CHWP-1	CHILLED WATER PUMP	208	3	7.5		24.2	4 #8 CU , 1 #10 GND. IN 1" C.	40/3	NA	N1-1,3,5	DIV 26	DIV 25	
CHWP-2	CHILLED WATER PUMP	208	3	7.5		24.2	4 #8 CU , 1 #10 GND. IN 1" C.	40/3	NA	N1-7,9,11	DIV 26	DIV 25	
HWP-1	HEATING WATER PUMP	208	3	3		10.6	4 #12 CU , 1 #12 GND. IN 3/4"C.	20/3	NA	CR1-1,3,5	DIV 26	DIV 25	
HWP-2	HEATING WATER PUMP	208	3	3		10.6	4 #12 CU , 1 #12 GND. IN 3/4"C.	20/3	NA	CR1-7,9,11	DIV 26	DIV 25	
BCP-1	CIRCULATING PUMP	208	3	0.75		3.5	4 #12 CU , 1 #12 GND. IN 3/4"C.	15/3	NA	CR1-2,4,6	DIV 26	NA	2
BCP-2	CIRCULATING PUMP	208	3	0.75		3.5	4 #12 CU , 1 #12 GND. IN 3/4"C.	15/3	NA	CR1-8,10,12	DIV 26	NA	2
B-1	BOILER CONNECTION	120	1		0.5	4.2	2 #12 CU , 1 #12 GND. IN 3/4" C.	15/1	NA	CR1-13	DIV 26	NA	4
B-2	BOILER CONNECTION	120	1		0.5	4.2	2 #12 CU , 1 #12 GND. IN 3/4" C.	15/1	NA	CR1-15	DIV 26	NA	4
CH-1	CHILLER	208	3		131	363.6	SEE ONE LINE DIAGRAM		NA	MDA	DIV 26	NA	
AHU -S	AIR HANDLER - SUPPLY	208	3		41	113.8	4 #1/O CU , 1 #6 GND. IN 2" C.	150/3	NA	CR1-14,16,18	DIV 26	DIV 25	6
AHU-R	AIR HANDLER - RETURN	208	3		11.1	30.8	4 #8 CU , 1 #10 GND. IN 1" C.	40/3	NA	CR1-20,22,24	DIV 26	DIV 25	6
EF-1	EXHAUST FAN	120	1	0.25		5.8	2 #12 CU , 1 #12 GND. IN 3/4" C.	15/1	DIV 23	CR1-17	DIV 25	NA	3
EF-2	EXHAUST FAN	120	1	0.25		5.8	2 #12 CU , 1 #12 GND. IN 3/4" C.	15/1	DIV 23	CR1,19	DIV 25	NA	3
EF-3	EXHAUST FAN	120	1	0.25		5.8	2 #12 CU , 1 #12 GND. IN 3/4" C.	15/1	DIV 23	CR1-21	DIV 25	NA	3
EF-4	EXHAUST FAN	120	1	0.25		5.8	2 #12 CU , 1 #12 GND. IN 3/4" C.	15/1	DIV 23	CR1-23	DIV 25	NA	3
ACU-1	AC UNIT INDOOR	208	1			0.4	NA	NA	NA	NA	DIV 26	NA	1
ACU-2	AC UNIT INDOOR	208	1			0.4	NA	NA	NA	NA	DIV 26	NA	1
ACU-3	AC UNIT INDOOR	208	1			0.4	NA	NA	NA	NA	DIV 26	NA	1
CU-1	AC UNIT OUTDOOR	208	1			18.0	2#10 CU, 1 #10 GND IN 3/4" C	30/2	NA	N1-2,4	DIV 26	NA	1,3
CU-2	AC UNIT OUTDOOR	208	1			18.0	2#10 CU, 1 #10 GND IN 3/4" C	30/2	NA	N1-6,8	DIV 26	NA	1,3
CU-3	AC UNIT OUTDOOR	208	1			18.0	2#10 CU, 1 #10 GND IN 3/4" C	30/2	NA	N1-10,12	DIV 26	NA	1,3
WH-1	WATER HEATER	120	1			1.0	2 #12 CU , 1 #12 GND. IN 1/2" C.	15/1	NA	N1-14	NA	N A	
WH2	WATER HEATER	120	1			1.0	2 #12 CU , 1 #12 GND. IN 1/2" C.	15/1	NA	N1-16	NA	N A	
DP-1	PUMP	120	1			0.8	2 #12 CU , 1 #12 GND. IN 1/2" C.	15/1	DIV 26	N1-18	DIV 26	N A	
FCU-1	FAN COIL UNIT	120	1			0.2	2 #12 CU , 1 #12 GND. IN 1/2" C.	20/1	NA	NA	DIV 25	N A	5
FCU-2	FAN COIL UNIT	120	1			0.1	2 #12 CU , 1 #12 GND. IN 1/2" C.	20/1	NA	NA	DIV 25	N A	5
FCU-3	FAN COIL UNIT	120	1			0.2	2 #12 CU , 1 #12 GND. IN 1/2" C.	20/1	NA	NA	DIV 25	N A	5
FMT-1	FUEL OIL MONITORING	120	1			1.0	2 #12 CU , 1 #12 GND. IN 1/2" C.	20/1	NA	CR1-27	NA	NA	

NOTES
1. SEE DETAIL 2/ES104 FOR WIRING DETAIL
2. FED FROM BOILER CONTROL PANEL
3. PROVIDE NEMA 3R DISCONNECT
4. PROVIDE EPO SWITCH. SEE DETAIL 5/ES-105.
5. CONNECT TO SAME BRANCH CIRCUIT AS LIGHT IN SAME ROOM(UNSWITCHED LEG).
6. SINGLE POINT CONNECTION. ELECTRICAL CONTRACTOR TO PROVIDE CONNECTION UP TO VFD. WIRING PROVIDED BY AHU VENDOR FROM VFD TO MOTORS.

Revisions:	Date

CONSULTANT

BALZHISER & HUBBARD ENGINEERS
MECHANICAL · ELECTRICAL · CIVIL · SURVEYORS
2100-031-10es-104.2.dwg

STAMP

REGISTERED PROFESSIONAL ENGINEER 50476
DIGITAL SIGNATURE
OREGON
KEVIN M. WARE
EXPIRES 6/30/14

ARCHITECT

Tina Ely Architect
2915 Wingate Street / Eugene, OR 97408
541 . 521 . 2477 / TinaEly@comcast.net
www.TinaElyArch.com

Drawing Title: ELECTRICAL SCHEDULES
Approved: Project Director

Project Title: SEISMIC REPLACEMENT BLDG 2 PHASE 1 MINOR ACUTE PSYCHIATRIC WARD
Location: ROSEBURG, OREGON
Date: 31 MAY 2013 | Checked: KMW | Drawn: JSG

VA Project Number: 653-322
Building Number: 086
Sheet Number: ES-104.2

Office of Construction and Facilities Management
Department of Veterans Affairs

VA FORM 08-6231

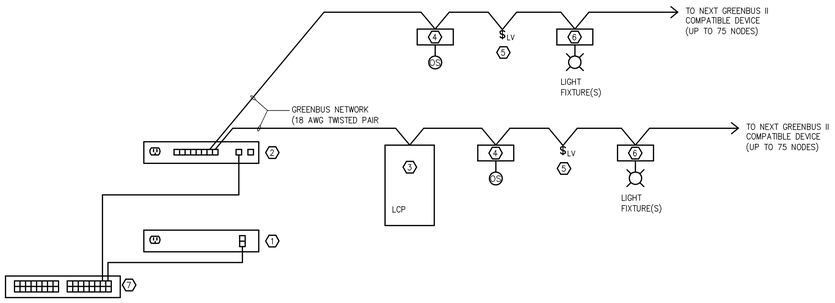

1 ENCELIUM GREENBUS II - RISER DIAGRAM

BASIS OF DESIGN: ENCELIUM

DETAIL 1 NOTES:

1. SYSTEM SUPPORT UNIT (SSU) WALL MOUNTED IN ELECTRICAL ROOM. REFERENCE DETAIL 2/ES-105.1.
2. ENERGY CONTROL UNIT (ECU) WALL MOUNTED IN ELECTRICAL ROOM. REFERENCE DETAIL 2/ES-105.1.
3. RELAY PANEL WITH 16 RELAYS. PANEL LOCATED IN ELECTRICAL ROOM.
4. SENSOR INTERFACE MODULE (SIM). PROVIDE ONE MODULE FOR EACH OCCUPANCY SENSOR AND PHOTOCELL WHERE INDICATED. TYPICAL.
5. LOW VOLTAGE WALL CONTROLLER WITH GREENBUS II COMMUNICATION CAPABILITIES. TYPICAL.
6. LUMINAIRE CONTROL MODULE (LCM). PROVIDE MODULES LOCATED AT FIXTURE(S) WHERE INDICATED. TYPICAL.
7. OWNER PROVIDED NETWORK SWITCH.

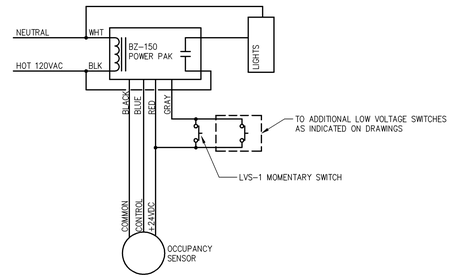

3 POWER PACK WIRING DIAGRAM

SCALE: NONE BASIS OF DESIGN: WATTSTOPPER

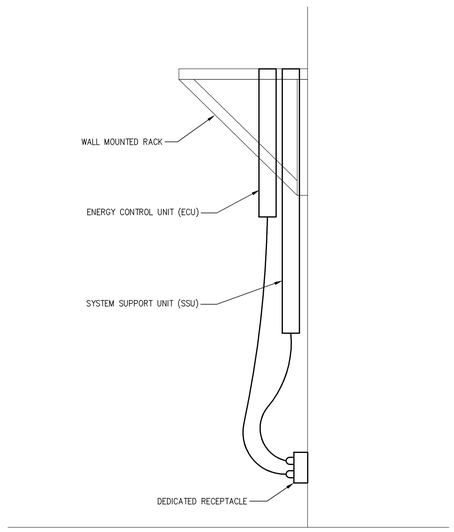

2 WALL MOUNTED LIGHTING CONTROL EQUIPMENT - DETAIL

SCALE: NONE

		Load Control Type					Control Device Type							System Control Capabilities / Integration								
Room Type	Room #	I/O Module per zone (group dimming)	I/O Module per zone (group switching)	I/O Module - 0-10V Non proprietary dimming ballast	Accessory Control Module with power pack (receptacle control)	Accessory Control Module (motorized ball valve serving faucet)	Panel based relay	Occupancy sensor	Lighting Control Software	Low voltage override wall controller	Low voltage override wall controller: multi zone				Time Clock Scheduling (on/off)	After hours override						
Public Vestibule	A101		X						X		X				X	X						
Public Lobby	A102		X						X		X				X	X						
Public Vending	A103		X						X		X				X	X						
Public Sallyport	A105		X						X		X				X	X						
PT Hall South	C101	X		X					X		X											
PT Commons West	C105	X		X					X		X											
PT Living Room West	C107	X		X					X		X											
PT Bariatric Single	C108		X		X				X													
PT Bariatric Shower	C109		X			X			X													
PT Single	C110		X		X				X													
PT Shower	C111		X			X			X													
PT Double	C112		X		X				X													
PT Shower	C113		X			X			X													
PT Double	C114		X		X				X													
PT Shower	C115		X			X			X													
PT Single	C116		X		X				X													
PT Shower	C117		X			X			X													
PT Hospital Bed	C118		X		X				X													
PT ADA Shower	C119		X			X			X													
PT Commons North	C122	X		X					X		X											
PT Secure Courtyard	C124						X		X						X							
PT Living Room North	C125	X		X					X		X											
PT Single	C126		X		X				X													
PT Shower	C127		X			X			X													
PT Double	C128		X		X				X													
PT Shower	C129		X			X			X													
PT Double	C130		X		X				X													
PT Shower	C131		X			X			X													
PT ADA Single	C132		X		X				X													
PT ADA Shower	C133		X			X			X													
PT Hall North	C134	X		X					X		X											
Seclusion Vestibule	D101						X	X														
Seclusion Hall	D102						X	X														
Staff Hall West	E101						X	X														
Staff Hall South	E104						X	X														
Mechanical Yard							X			X												

NOTES:

1. CONTRACTOR TO VERIFY ALL QUANTITIES OF CONTROL MODULES.

3 ENCELIUM - SEQUENCE OF OPERATIONS MATRIX

SCALE: NONE

Revisions:	Date

CONSULTANT

BALZHISER & HUBBARD ENGINEERS
MECHANICAL ELECTRICAL CIVIL SURVEYORS
100 WEST 13TH AVENUE EUGENE, OREGON 97401
T: 541-686-8076
F: 541-345-5503
2100-031-10es-105.1.dwg

STAMP

REGISTERED PROFESSIONAL ENGINEER 50476 DIGITAL SIGNATURE OREGON JULY 21, 1989 KEVIN M. WARE
EXPIRES 6/30/14

ARCHITECT

Tina Ely Architect
2915 Wingate Street / Eugene, OR 97408
541 . 521 . 2477 / Tina.Ely@comcast.net
www.TinaElyArch.com

Drawing Title: ELECTRICAL DETAILS

Approved: Project Director

Project Title: SEISMIC REPLACEMENT BLDG 2 PHASE 1 MINOR ACUTE PSYCHIATRIC WARD

Location: ROSEBURG, OREGON

Date: 31 MAY 2013 | Checked: KMW | Drawn: JSG

VA Project Number: 653-322

Building Number: 086

Sheet Number: ES-105.1

Office of Construction and Facilities Management

Department of Veterans Affairs

VA FORM 08-6231

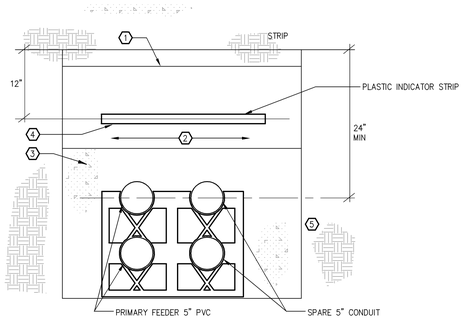

1 TRENCHING DETAIL - SECONDARY FEEDER PRIMARY FEEDERS - SIMILAR

NO SCALE

DETAIL 1 NOTES:

1. SEE SPECIFICATION FOR TRENCH AND BACKFILL REQUIREMENTS. RETURN SURFACE TO EXISTING CONDITION. WHERE RUN UNDER PAVING, REPAVE TO MATCH SURROUNDINGS.
2. BACKFILL WITH ORIGINAL NATIVE SOIL.
3. PROVIDE 3" CONCRETE TOP COVER AND 3" SIDE COVER FOR DUCTS, TYPICAL.
4. LAY IN PLASTIC INDICATOR STRIP, 12" BELOW GRADE. 3" RED, NON DETECTABLE, WORDING: "CAUTION BURIED ELECTRIC LINE" BLACK LETTERING. ACCEPTABLE MANUFACTURERS: BRADY, PANDUIT.
5. PROVIDE MINIMUM 12 INCHES SPACE BETWEEN POWER AND GAS LINE.

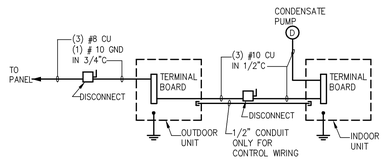

2 AC TYPICAL WIRING SCHEMATIC

NO SCALE

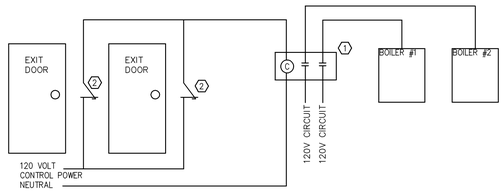

5 EMERGENCY BOILER SHUTDOWN CONTROL DIAGRAM

NO SCALE

EMERGENCY BOILER SHUTDOWN CONTROL DIAGRAM NOTES:

1. PROVIDE RELAY TO REMOVE POWER TO BOILERS. RELAY SHALL BE ELECTRICALLY HELD. NUMBER OF POLES IN RELAY SHALL MATCH OR EXCEED NUMBER OF PHASE CONDUCTORS PROVIDING POWER TO THE BOILER CONTROL PANELS. SQUARE D CONTACTOR L SERIES OR APPROVED.
2. PROVIDE PUSH PULL STATION AT EACH BOILER ROOM DOOR FOR SHUTDOWN OF BOILERS. PULL STATION SHALL BE LOCATED JUST OUTSIDE THE BOILER ROOM DOOR(S). IF THE BOILER ROOM DOOR IS ON THE BUILDING EXTERIOR, THE SWITCH SHALL BE LOCATED JUST INSIDE THE DOOR. PUSH PULL STATION SHALL CONTAIN AT LEAST ONE NORMALLY CLOSED SET OF CONTACTS. SQUARE D ZB5AX4 SERIES OR APPROVED.
3. CONNECT EPO CIRCUIT AS REQUIRED BY MANUFACTURER.

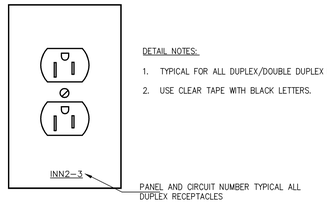

4 DEVICE PLATE DETAIL

SCALE: NONE

DETAIL NOTES:

1. TYPICAL FOR ALL DUPLEX/DOUBLE DUPLEX RECEPTACLES.
2. USE CLEAR TAPE WITH BLACK LETTERS.

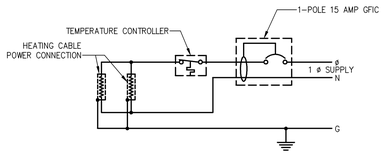

6 THERMOSTAT/HEAT TRACE WIRING SCHEMATIC

NO SCALE

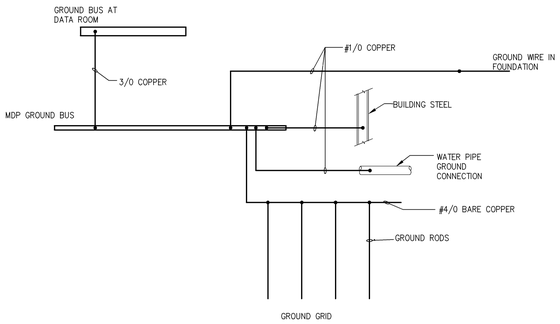

7 GROUNDING DETAIL

SCALE: NONE

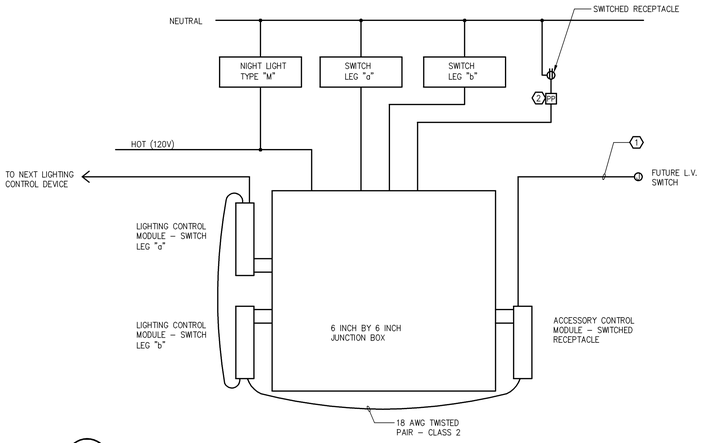

8 PATIENT ROOM RELAY PANEL - WIRING DIAGRAM

SCALE: NONE

DETAIL 2 NOTES:

1. PROVIDE 18 AWG TWSTED PAIR TO EMPTY JUNCTION FOR INSTALLATION OF FUTURE LOW VOLTAGE SWITCH.
2. PROVIDE POWER PACK IN CONJUNCTION WITH ACCESSORY CONTROL MODULE TO ALLOW SWITCHING OF 20 AMP CIRCUIT SERVING RECEPTACLE.

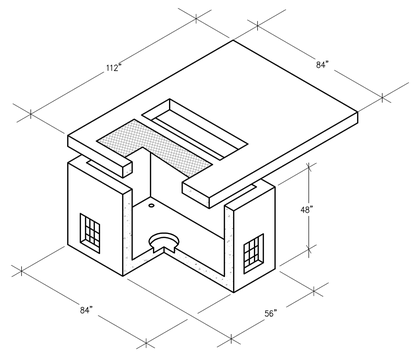

9 TRANSFORMER/SECTIONALIZING PAD VAULT WITH ACCESS

NO SCALE

GENERAL NOTES:

1. PROVIDE SEPARATE VAULTS FOR TRANSFORMER AND SECTIONALIZING CABINETS.

Revisions:	Date

CONSULTANT

BALZHISER & HUBBARD ENGINEERS
MECHANICAL ELECTRICAL CIVIL SURVEYORS
500 WEST 13TH AVENUE EUGENE, OR 97401
P: 541-686-8678
F: 541-343-5921
2100-031-10es-105.dwg

STAMP

REGISTERED PROFESSIONAL ENGINEER 50476 OREGON 21 JAN 1986 KEVIN M. WIRE
DIGITAL SIGNATURE
EXPIRES 6/30/14

ARCHITECT

Tina Ely Architect
2915 Wingate Street / Eugene, OR 97408
541 . 521 . 2477 / TinaEly@comcast.net
www.TinaElyArch.com

Drawing Title: ELECTRICAL DETAILS

Approved: Project Director

Project Title: SEISMIC REPLACEMENT BLDG 2 PHASE 1 MINOR ACUTE PSYCHIATRIC WARD

Location: ROSEBURG, OREGON

Date: 31 MAY 2013 | Checked: KMW | Drawn: JSG

VA Project Number: 653-322

Building Number: 086

Sheet Number: ES-105

Office of Construction and Facilities Management

Department of Veterans Affairs

VA FORM 08-6231

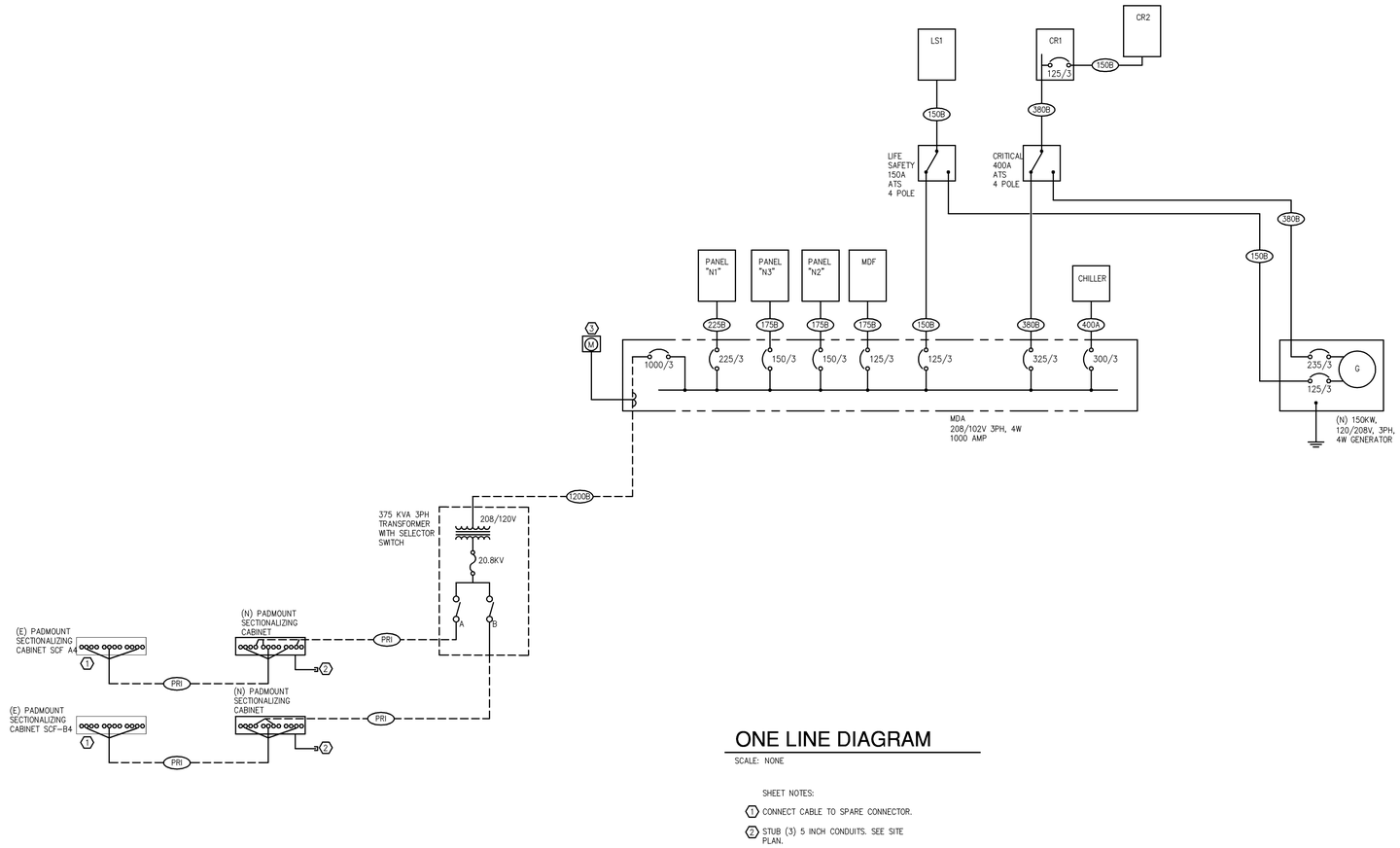

ONE LINE DIAGRAM

SCALE: NONE

SHEET NOTES:

1. CONNECT CABLE TO SPARE CONNECTOR.
2. STUB (3) 5 INCH CONDUITS. SEE SITE PLAN.
3. ELECTRICAL METERS TO BE PROVIDED BY ELECTRICAL CONTRACTOR. REFER TO SPECIFICATION SECTION 25 10 10 FOR METER REQUIREMENTS.

Load Summary - Building Total

Load Type	Total load (KW)
Mechanical	193
Lighting	22
Devices	30
Misc	91
Total (KW)	336
Total Amperes @ 208V	934

Load Summary - Emergency

Load Type	Total load (KW)
LIFE SAFETY BRANCH	14
CRITICAL BRANCH	114
Total (KW)	128
Total Amperes @ 208V	356

FEEDER SCHEDULE

DESIG.	DESCRIPTION	COMMENTS
50A	3 #8 CU , 1 #10 GND. IN 1" C.	Verify 75 degree rating of an older brkr.
80A	3 #4 CU , 1 #8 GND. IN 1 1/4" C.	Verify 75 degree rating of an older brkr.
125B	4 #1 CU, 1 #6 GND. IN 1 1/2" C.	
150A	3 #1/O CU , 1 #6 GND. IN 2" C.	
150B	4 #1/O CU , 1 #6 GND. IN 2" C.	
175B	4 #2/O CU , 1 #6 GND. IN 2" C.	
200A	3 #3/O CU , 1 #6 GND. IN 2" C.	
200B	4 #3/O CU , 1 #6 GND. IN 2 1/2" C.	
225B	4 #4/0 CU , 1 #4 GND. IN 2 1/2" C.	
350B	4 #500 CU , 1 #2 GND. IN 3 1/2" C.	
400A	2 SETS OF (3 #3/O CU , 1 #2 GND. IN 2 1/2" C.)	
400B	2 SETS OF (4 #3/O CU , 1 #2 GND. IN 2 1/2" C.)	
1200B	4 SETS OF (4 #350 CU , 1 #4/O GND. IN 3 1/2" C.)	
PRI	#4/0 3 WIRE MEDIUM VOLTAGE CABLES IN 4"C	

KEY:

X = EMPTY CONDUITS	T = 2 WIRE
S = 4 WIRE SERVICE (NO GND.)	A = 3 WIRE
N = 4 WIRE W/ 200% RATED NEUTRAL	B = 4 WIRE
G = 4 WIRE W/ 200% RATED NEUTRAL & ISO. GND.	I = 4 WIRE W/ ISO. GND.

Revisions:	Date

CONSULTANT

BALZHISER & HUBBARD ENGINEERS
MECHANICAL • ELECTRICAL • CIVIL • SURVEYORS
100 WEST 13TH AVENUE EUGENE, OR 97401
P: 541-686-8678
F: 541-343-5703
2100-031-10es-106.dwg

STAMP

REGISTERED PROFESSIONAL ENGINEER 50476 OREGON JULY 21, 1989 KEVIN M. WARE
DIGITAL SIGNATURE
EXPIRES 6/30/14

ARCHITECT

Tina Ely Architect
2915 Wingate Street / Eugene, OR 97408
541 . 521 . 2477 / TinaEly@comcast.net
www.TinaElyArch.com

Drawing Title: ONE LINE DIAGRAM

Approved: Project Director

Project Title: SEISMIC REPLACEMENT BLDG 2 PHASE 1 MINOR ACUTE PSYCHIATRIC WARD

Location: ROSEBURG, OREGON

Date: 31 MAY 2013 | Checked: KMW | Drawn: JSG

VA Project Number: 653-322

Building Number: 086

Sheet Number: ES-106

Office of Construction and Facilities Management

Department of Veterans Affairs

VA FORM 08-6231