GENERAL NOTES

A FIRE ALARM SYSTEM IS TO BE INSTALLED IN ACCORDANCE WITH APPLICABLE PROVISIONS OF NFPA, OFC, OSSC, ADA, AND ANSI STANDARDS.

B SOME SYMBOLS OR ABBREVIATIONS MAY APPEAR ON THIS SHEET AND NOT ON THE PROJECT DRAWINGS.

C WIRES TO BE ROUTED IN 3/4" MINIMUM CONDUIT.

D REFER TO ELECTRICAL DRAWINGS FOR ELECTRICALLY CLASSIFIED AREAS. REFER TO ARCHITECTURAL DRAWINGS AND SPECIFICATION FOR WALL RATINGS AND SEALING REQUIREMENTS.

E CONTRACOR SHALL PROVIDE APPROPRIATE AND COMPLETE SEALANT OF ALL PENETRATIONS THROUGH INTERIOR AND EXTERIOR WALL CONDITIONS, FLOORS, AND OTHER ASSEMBLIES. SEAL VOIDS BETWEEN SLEEVES, CONDUITS, OR OTHER INSTALLATIONS WITH APPROPRIATE JOINT SEALANTS. CONTRACTOR TO ASSURE PROPER SEALANT OF ALL VOIDS AT OPENINGS AND PENETRATIONS. REFER TO PROJECT SPECIFICATIONS AND ARCHITECTURAL FOR FIRE RATED PENETRATIONS.

F REFER TO SECTION 28 31 00 FOR ADDITIONAL REQUIREMENTS.

G. REFER TO MECHANICAL SHEET MH-503 FOR ADDITIONAL INFORMATION ON HVAC REQUIRED CONNECTIONS.

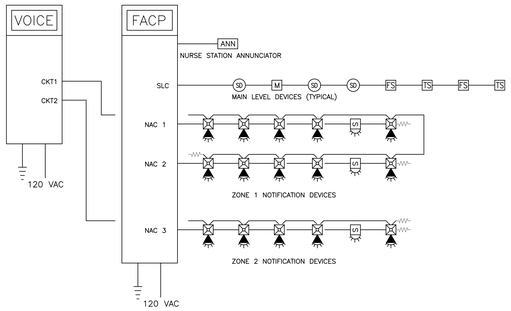

SCHEMATIC ONE LINE RISER (TYPICAL)
NOT ALL FIRE ALARM DEVICES ARE SHOWN

INPUT/OUTPUT MATRIX

		FIRE ALARM CONTROL PANEL																	NOTIFICATION						FIRE SAFETY CONTROL					
		A	B	C	D	E	F	G	H	I	J	K	L	M	N	O	P	Q	R	S	T	U	V	W
		ACTUATE ALARM SIGNAL LED ON FACP	ACTUATE AUDIBLE ALARM SIGNAL ON FACP	ACTUATE SUPERVISORY SIGNAL LED ON FACP	ACTUATE AUDIBLE SUPERVISORY SIGNAL ON FACP	ACTUATE TROUBLE SIGNAL LED ON PANEL	ACTUATE AUDIBLE TROUBLE SIGNAL ON FACP	ACTUATE MESSAGE ON FACP LCD DISPLAY	SIGNAL TO VOICE CONTROL PANEL	REMOTE ANNUNCIATOR AT NURSE STATION		ACTUATE EVACUATION MESSAGE	ACTUATE EXTERIOR WATERFLOW ALARM BELL	TRANSMIT FIRE ALARM SIGNAL TO SUPERVISING STATION	TRANSMIT SUPERVISORY SIGNAL TO SUPERVISING STATION	TRANSMIT TROUBLE SIGNAL TO SUPERVISING STATION								HAVC FAN SHUTDOWN					
	ALARM SIGNAL																													
1	SPRINKLER WATERFLOW SWITCH (2)	●	●					●	●	●		●	●	●																
2	MANUAL PULL STATION (2)	●	●					●	●	●		●		●																
3	SMOKE DETECTORS – EGRESS	●	●					●	●	●		●		●																
4	SMOKE DETECTORS – RESIDENT ROOMS			●	●			●		●					●															
	SUPERVISORY SIGNAL																													
4	SPRINKLER TAMPER SWITCH(S)			●	●			●		●					●															
5	DUCT SMOKE DETECTOR – AHU			●	●			●		●					●				●											
	TROUBLE SIGNAL																													
7	FIRE ALARM SYSTEM AC POWER FAIL					●	●									●														
8	FIRE ALARM SYSTEM LOW BATTERY					●	●									●														
9	POWER SUPPLY PANEL LOW BATTERY					●	●									●														
10	OPEN CIRCUIT					●	●									●														
11	GROUND FAULT					●	●									●														
12	NOTIFICATION APPLIANCE CIRCUIT SHORT					●	●									●														

NOTES:

1. IF SEQUENCE INDICATED HERE CONFLICTS WITH THE SPECIFICATION, THIS CONTROL SEQUENCE SUPERCEDES SPECIFICATION SEQUENCE.

2. FINALIZE OPERATIONS IN ACCORDANCE WITH NFPA 72, CONTRACT DOCUMENT AND VA FP DM.

3. THIS SEQUENCE OF OPERATIONS IS CONSIDERED TO BE MINIMUM. ADD INPUT/OUTPUT WITH APPROVED COORDINATION WITH THE AUTHORITY HAVING JURISDICTION.

4. PROVIDE CONTACTS (4) TO ASSURE HVAC SHUTDOWN IN AUTOMATIC OR MANUAL / BYPASSMODE. REFER TO MECHANICAL SHEET MH-503.

FIRE ALARM INPUT/OUTPUT MATRIX

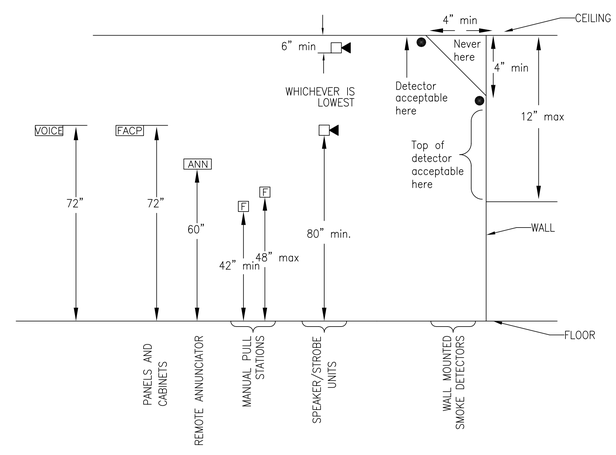

FIRE ALARM PLACEMENT SCHEMATIC

FIRE ALARM SYMBOLS:

SYMBOL	DESCRIPTION
FACP	FIRE ALARM CONTROL PANEL (FACP)
VOICE	VOICE CONTROL PANEL (VCP)
ANN	REMOTE ANNUNCIATOR (ANN)
F	MANUAL PULL STATION
SD	SMOKE DETECTOR
FSD	DUCT SMOKE DETECTOR
	SPEAKER
ST	STROBE ONLY
	COMBINATION SPEAKER STROBE
R	CONTROL RELAY
	END-OF-LINE RESISTOR
J	JUNCTION BOX
M	MAGNETIC DOOR HOLDER/RELEASE
TS	SUPERVISORY VALVE TAMPER SWITCH
FS	SPRINKLER FLOW SWITCH
S/D	SMOKE/FIRE DAMPER
	EXTERIOR BELL
WP	WEATHERPROOF

Revisions	Date

CONSULTANT

WOMER & ASSOCIATES
221 North Wall Street, Suite 600 – Spokane, WA 99201

CREIGHTON ENGINEERING
210 N. University Rd. Suite 100 (509) 921-9755
Spokane, WA 99206-5084 FAX(509) 921-9806

STAMP

ARCHITECT

Tina Ely Architect
2915 Wingate Street / Eugene, OR 97408
541.521.2477 / Tina.Ely@comcast.net
www.TinaElyArch.com

Drawing Title: FIRE ALARM COVER SHEET

Approved: Project Director

Project Title: SEISMIC REPLACEMENT BLDG 2 PHASE 1 MINOR ACUTE PSYCHIATRIC WARD

Location: ROSEBURG, OREGON

Date: 31 MAY 2013 | Checked: SRC | Drawn: MM

VA Project Number: 653-322

Building Number: 086

Sheet Number: FA1

OFFICE OF CONSTRUCTION AND FACILITIES MANAGEMENT

Department of Veterans Affairs

VA FORM 08-6231

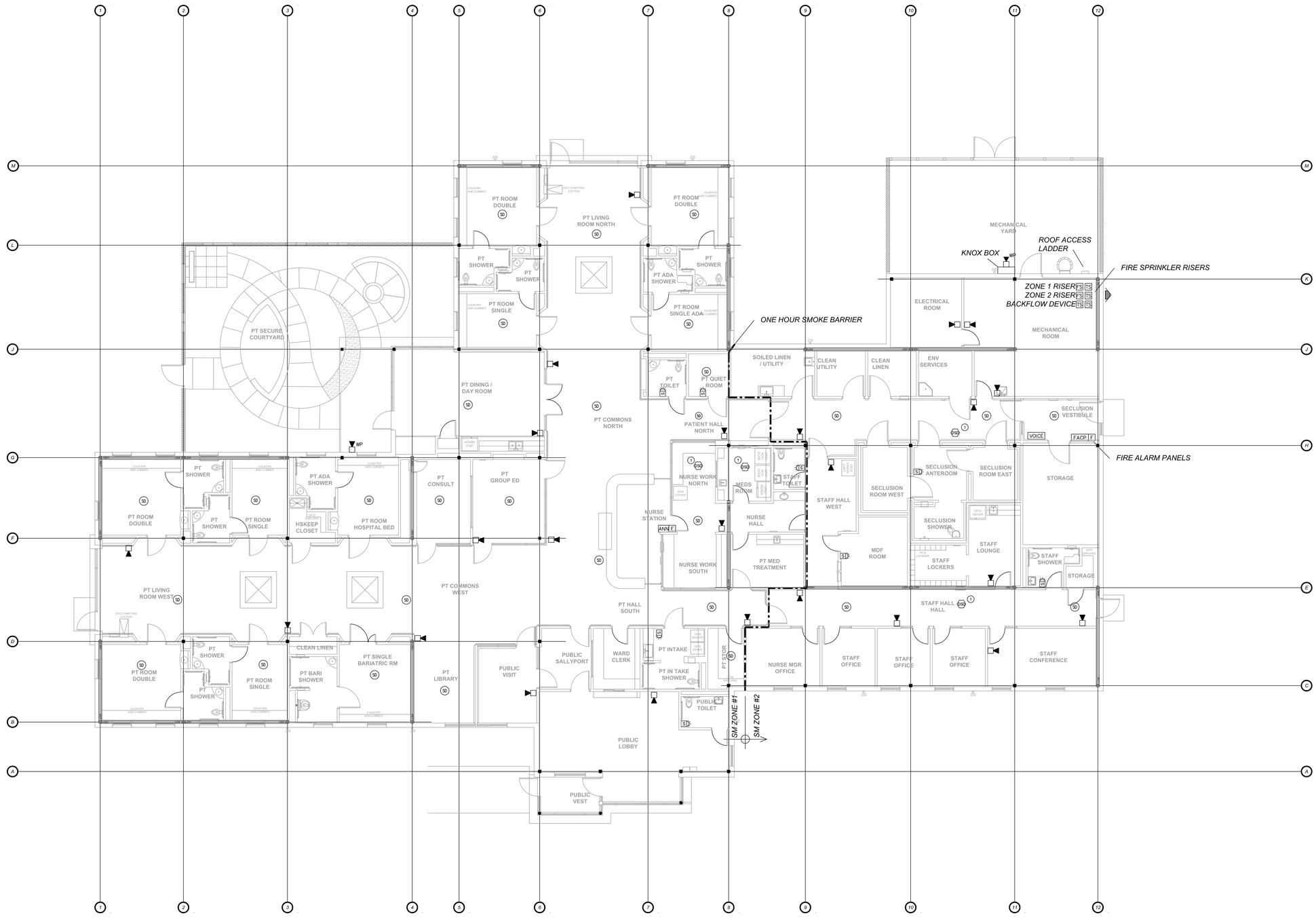

FIRE ALARM SYMBOLS:

SYMBOL	DESCRIPTION
FACP	FIRE ALARM CONTROL PANEL (FACP)
VOICE	VOICE CONTROL PANEL (VCP)
ANN	REMOTE ANNUNCIATOR (ANN)
F	MANUAL PULL STATION
SD	SMOKE DETECTOR
DNR	DUCT SMOKE DETECTOR
	SPEAKER
S	STROBE ONLY
	COMBINATION SPEAKER STROBE
R	CONTROL RELAY
	END-OF-LINE RESISTOR
J	JUNCTION BOX
M	MAGNETIC DOOR HOLDER/RELEASE
TS	SUPERVISORY VALVE TAMPER SWITCH
FS	SPRINKLER FLOW SWITCH
S/D	SMOKE/FIRE DAMPER
	EXTERIOR BELL
WP	WEATHERPROOF

SHEET NOTES

1. ROOF TOP UNITS. PENETRATION AT THIS LOCATION

FIRE ALARM LAYOUT PLAN

1/8" = 1'0"

0' 8' 16' 24' 32'
GRAPHIC SCALE 1/8" = 1'-0"

Revisions	Date

CONSULTANT

WOMER & ASSOCIATES
221 North Wall Street, Suite 600 - Spokane, WA 99201

CREIGHTON ENGINEERING
210 N. University Rd. Suite 100 (509) 921-9755
Spokane, WA 99206-5084 FAX(509) 921-9806

STAMP

ARCHITECT

Tina Ely Architect
2915 Wingate Street / Eugene, OR 97408
541.521.2477 / TinaEly@comcast.net
www.TinaElyArch.com

Drawing Title: FIRE ALARM SYSTEM LAYOUT

Approved: Project Director

Project Title: SEISMIC REPLACEMENT BLDG 2 PHASE 1 MINOR ACUTE PSYCHIATRIC WARD

Location: ROSEBURG, OREGON

Date: 31 MAY 2013 | Checked: SRC | Drawn: MM

VA Project Number: 653-322

Building Number: 086

Sheet Number: FA2

OFFICE OF CONSTRUCTION AND FACILITIES MANAGEMENT

Department of Veterans Affairs

VA FORM 08-6231