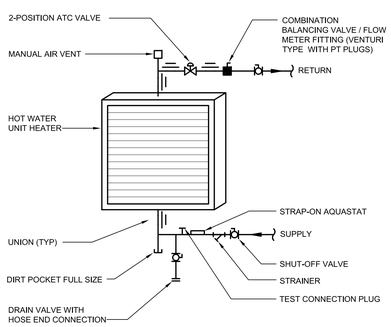

1 **UNIT HEATER PIPING DETAIL**
NO SCALE
MDD010

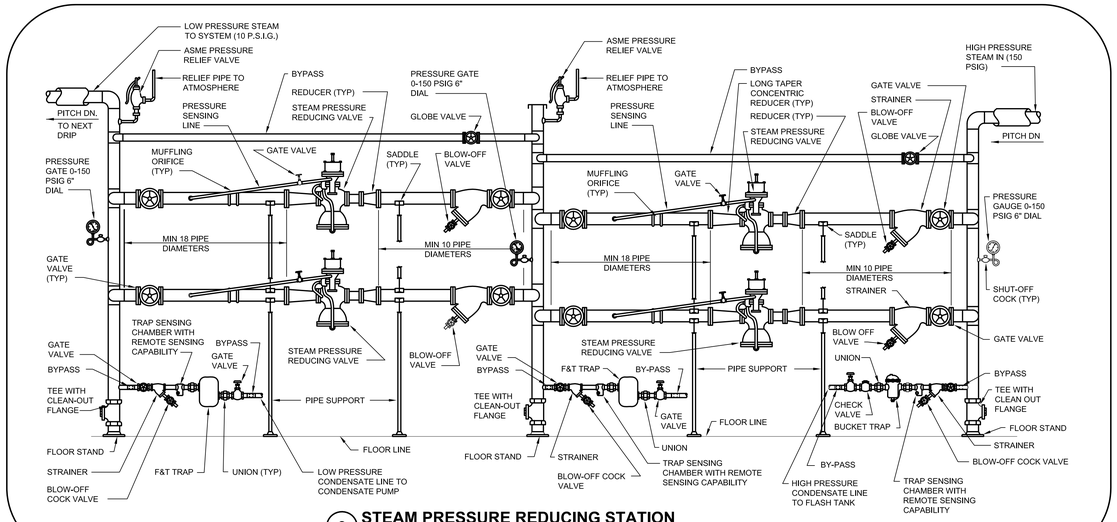

2 **STEAM PRESSURE REDUCING STATION**
NO SCALE
SDD003

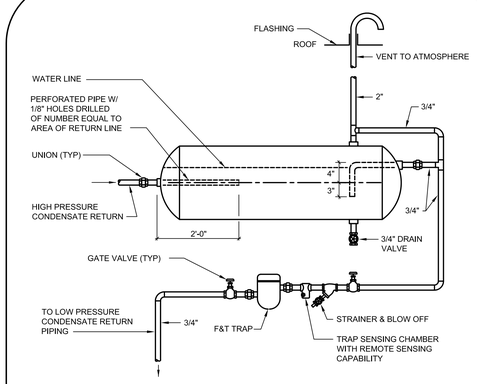

3 **FLASH TANK DETAIL**
NO SCALE
SDD005

NOTE: TANK SHALL BE AN ASME PRESSURE TANK FOR HIGH PRESSURE STEAM.

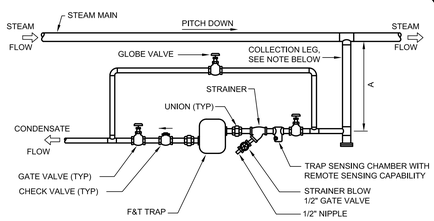

4 **LOW PRESSURE MAIN DRIP DETAIL**
NO SCALE
SDD007

NOTE: DIAMETER OF COLLECTION LEG AND LENGTH A SHALL BE AS FOLLOWS:

STEAM MAIN SIZE	DIAMETER	LENGTH "A"
1/2" - 4"	SAME AS STEAM MAIN	AUTOMATIC START UP: 28" OR MORE SUPERVISED START UP: 1.5 TIMES MAIN Ø, NEVER SHORTER THAN 8"
5" AND LARGER	2 TO 3 PIPE SIZES SMALLER THAN MAIN BUT NEVER SMALLER THAN 4"	AUTOMATIC START UP: 28" OR MORE SUPERVISED START UP: 1.5 TIMES MAIN Ø, NEVER SHORTER THAN 8"

SPACE MAIN DRIPS EVERY 300 FEET IF NOT OTHERWISE INDICATED.

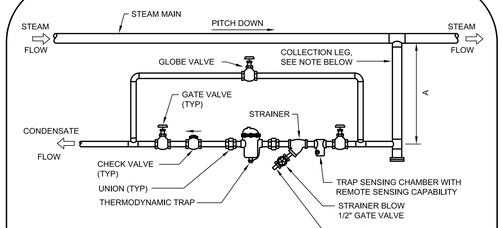

5 **HIGH PRESSURE MAIN DRIP DETAIL**
NO SCALE
SDD008

NOTE:
DIAMETER OF COLLECTION LEG AND LENGTH "A" SHALL BE AS FOLLOWS:

STEAM MAIN SIZE	DIAMETER	LENGTH "A"
1/2" - 4"	SAME AS STEAM MAIN	AUTOMATIC START UP: 28" OR MORE SUPERVISED START UP: 1.5 TIMES MAIN Ø, NEVER SHORTER THAN 8"
5" AND LARGER	2 TO 3 PIPE SIZES SMALLER THAN MAIN BUT NEVER SMALLER THAN 4"	AUTOMATIC START UP: 28" OR MORE SUPERVISED START UP: 1.5 TIMES MAIN Ø, NEVER SHORTER THAN 8"

SPACE MAIN DRIPS EVERY 300 FEET IF NOT OTHERWISE INDICATED.

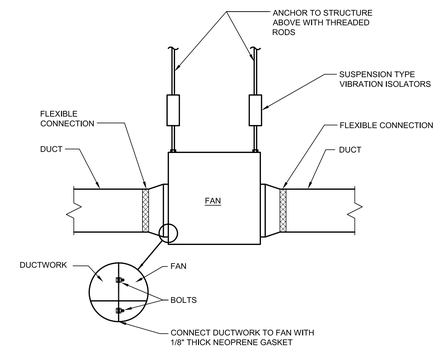

6 **CENTRIFUGAL IN-LINE FAN DETAIL**
NO SCALE
MDD070

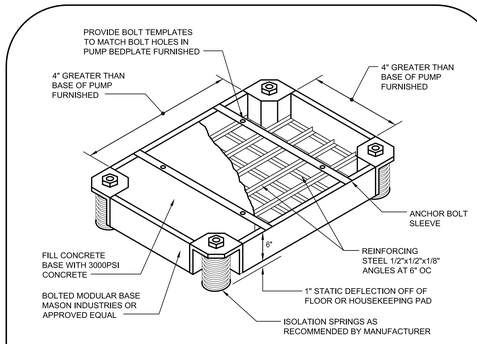

7 **PUMP ISOLATION BASE DETAIL**
NO SCALE
MDD104

NOTES:
1. SUPPORT ONLY PUMP WEIGHT ON BASE. SUPPORT PIPING WEIGHT ON STRUCTURE WITH SPRING HANGERS.
2. SET ANCHOR BOLT TEMPLATES AND ANCHOR BOLTS WITH TEMPLATE BEFORE FILLING BASE WITH CONCRETE.

Additions: | *Date:*

Revisions:

Consultants

BURDETTE KOEHLER MURPHY & ASSOCIATES, INC.
MECHANICAL / ELECTRICAL CONSULTING ENGINEERING
1423 CLARKVIEW ROAD, SUITE 500
BALTIMORE, MARYLAND 21209
410.323.0600 – FAX 410.377.2543

BUILDING COST CONSULTANTS
COST ESTIMATING
12917 – 30TH AVENUE
PLATTSMOUTH, NEBRASKA 68048
402.298.8260 – FAX 402.298.8290

Seal:

ARCHITECTURE PLANNING ENGINEERING
POLT DESIGN GROUP
1301 Enterprise Court, Suite 103-C 410.803.2141
Bel Air, Maryland 21014-1847 fax 410.838.1603
www.polt-design.com

Drawing Scale:
Drawing Start Date:
Drawing Finish Date:
Drawing Approved:

Drawing Title: MECHANICAL DETAILS
Approved: Associate Director for Operations:
Approved: Chief, Facilites Engineer:
Approved: Director, Medical Center:

Project Title: BUILDING 15 RENOVATION
Building No: 15
Checked: ABC
Drawn: CCH
Location: VAMHCS MEDICAL CENTER WILMINGTON, DELAWARE

Date: 12-19-2012
Project No: xxx-10-xxx
DRAWING NO: 15H-15
Dwg. – Of xx

DEPARTMENT OF VETERANS AFFAIRS

BKM# 070360.060