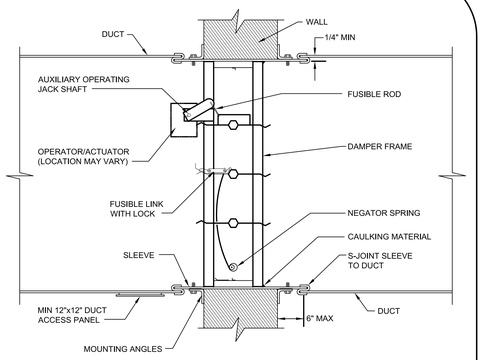

COMBINATION FIRE AND SMOKE DAMPER DETAIL

1 NO SCALE M0D074

NOTE: DUCT ACCESS DOORS SHALL BE PROVIDED TO ACCESS FIRE/SMOKE DAMPER AS WELL AS ASSOCIATED SMOKE DETECTOR .

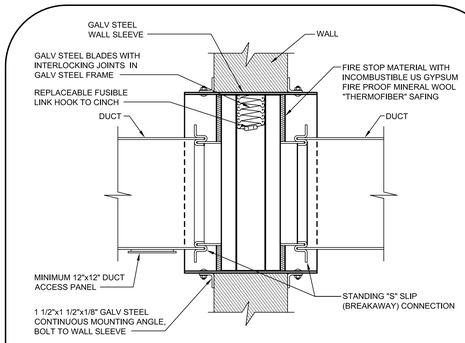

HORIZONTAL DUCT FIRE DAMPER

2 NO SCALE M0D073

NOTES:
1. FIRE DAMPERS TO HAVE BREAKAWAY JOINT BETWEEN COLLARS AND DUCT. (COLLARS SHALL BE INTEGRAL WITH FIRE DAMPERS FRAME.)
2. FIRE DAMPER SHALL BE U.L. LABELED.
3. GALVANIZED SLEEVE AND FRAME CONSTRUCTION SHALL BE MINIMUM 20 GA. SHOULD DUCT BE HEAVIER THAN 20 GAUGE, PROVIDE SLEEVE AND FRAME TO MATCH DUCT CONSTRUCTION.

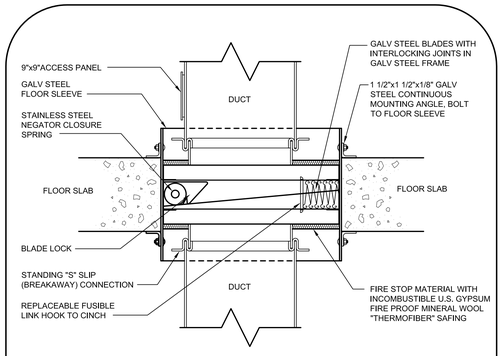

VERTICAL DUCT FIRE DAMPER

3 NO SCALE M0D072

NOTES:
1. FIRE DAMPERS TO HAVE BREAKAWAY JOINT BETWEEN COLLARS AND DUCT. (COLLARS SHALL BE INTEGRAL WITH FIRE DAMPERS FRAME.)
2. FIRE DAMPER SHALL BE U.L. LABELED.
3. GALVANIZED SLEEVE AND FRAME CONSTRUCTION SHALL BE MINIMUM 20 GA SHOULD DUCT BE HEAVIER THAN 20 GAUGE, PROVIDE SLEEVE AND FRAME TO MATCH DUCT CONSTRUCTION.

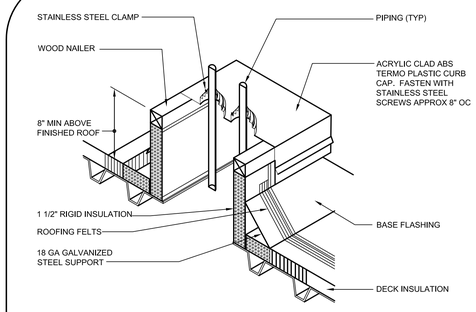

PIPING THRU ROOF DECK

4 NO SCALE M0D095

NOTES:
1. CURB SHALL BE MANUFACTURED BY PATE, THYCURB, OR EQUIVALENT.
2. REFER TO ARCHITECTURAL CONSTRUCTION DOCUMENTS FOR ROOF CONSTRUCTION AND DETAILS OF ALL REQUIRED ROOF WORK INCLUDING BUT NOT LIMITED TO FLASHING AND COUNTER FLASHING OF CURBS, PENETRATIONS, ETC.

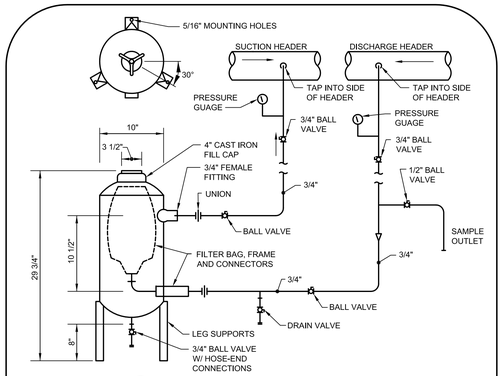

CLOSED-LOOP FEEDER DETAIL

5 NO SCALE M0D128

NOTE: FEEDER, FILTER BAG AND INLET CONNECTIONS SHALL BE PROVIDED BY WATER TREATMENT MANUFACTURER . REMAINDER OF PIPE, VALVES AND FITTINGS SHALL BE PRINTED BY CONTRACTOR .

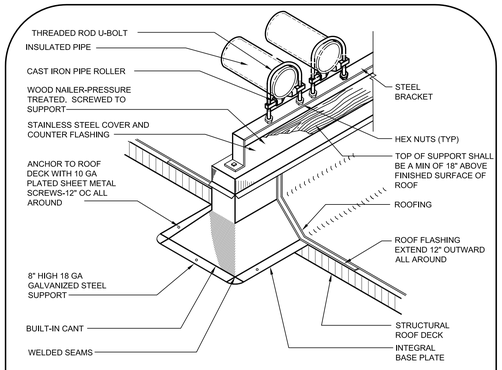

ROOF PIPING SUPPORT DETAIL

6 NO SCALE M0D102

NOTES:
1. SUPPORTS SHALL REST ON STRUCTURAL ROOF DECK. PROVIDE RAISED CANT AND CUT EXISTING ROOF INSULATION AS REQUIRED.
2. REFER TO ARCHITECTURAL CONSTRUCTION DOCUMENTS FOR ROOF CONSTRUCTION AND DETAILS OF ALL REQUIRED ROOF WORK INCLUDING BUT NOT LIMITED TO FLASHING AND COUNTER FLASHING OF CURBS, PENETRATIONS, ETC.

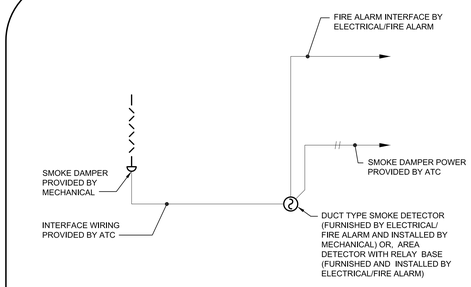

SMOKE DAMPER WIRING DETAIL

7 NO SCALE M0D123

NOTES:
1. SMOKE DAMPER SHALL CLOSE WHEN PRODUCTS OF COMBUSTION ARE SENSED BY SMOKE DETECTOR .
2. SMOKE DETECTOR SHALL BE INSTALLED WITHIN FIVE (5) FEET OF THE SMOKE DAMPER .
3. CONNECTIONS SHALL BE SIMILAR FOR COMBINATION FIRE/ SMOKE DAMPERS.
4. COORDINATE DAMPER VOLTAGE WITH SMOKE DETECTOR RELAY VOLTAGE.

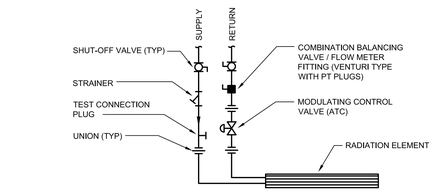

RADIANT HEAT PANEL PIPING DETAIL

8 NO SCALE

NOTE: ALL VALVES AND CONTROLS SHALL BE IN AN ACCESSIBLE LOCATION.

Additions:	Date:
Revisions:	

Consultants

BURDETTE KOEHLER MURPHY & ASSOCIATES, INC.
MECHANICAL / ELECTRICAL CONSULTING ENGINEERING
1423 CLARKVIEW ROAD, SUITE 500
BALTIMORE, MARYLAND 21209
410.323.0600 – FAX 410.377.2543

BUILDING COST CONSULTANTS
COST ESTIMATING
12917 – 30TH AVENUE
PLATTSMOUTH, NEBRASKA 68048
402.298.8260 – FAX 402.298.8290

Seal:

ARCHITECTURE PLANNING ENGINEERING
POLT DESIGN GROUP
1301 Enterprise Court, Suite 103-C 410.803.2141
Bel Air, Maryland 21014-1847 fax 410.838.1603
www.polt-design.com

Drawing Scale:
Drawing Start Date:
Drawing Finish Date
Drawing Approved:

Drawing Title: MECHANICAL DETAILS
Approved: Associate Director for Operations:
Approved: Chief, Facilites Engineer:
Approved: Director, Medical Center:

Project Title: BUILDING 15 RENOVATION
Building No: 15
Checked: JDS
Drawn: REF
Location: VAMHCS MEDICAL CENTER WILMINGTON, DELAWARE

Date: 12-19-2012
Project No: xxx-10-xxx
DRAWING NO: 15H-16
Dwg. – Of xx

DEPARTMENT OF VETERANS AFFAIRS

BKM# 070360.060