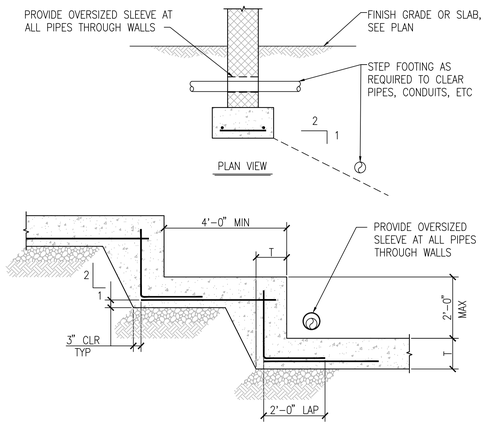

A TYPICAL STEPPED WALL FOOTING
SCALE: 1/2" = 1'-0"

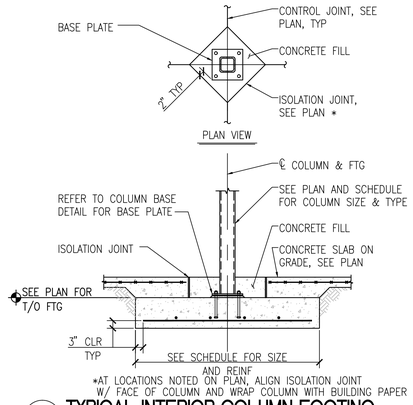

*AT LOCATIONS NOTED ON PLAN, ALIGN ISOLATION JOINT W/ FACE OF COLUMN AND WRAP COLUMN WITH BUILDING PAPER

B TYPICAL INTERIOR COLUMN FOOTING
SCALE: 1/2" = 1'-0"

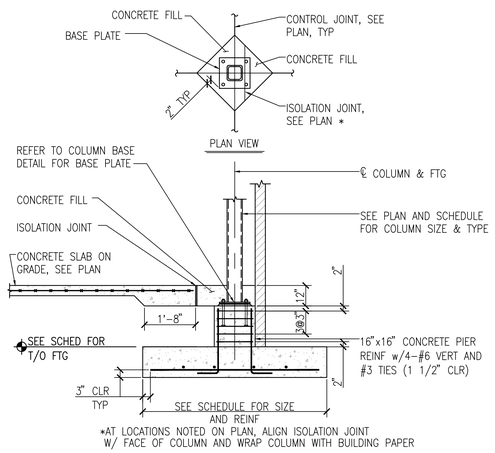

*AT LOCATIONS NOTED ON PLAN, ALIGN ISOLATION JOINT W/ FACE OF COLUMN AND WRAP COLUMN WITH BUILDING PAPER

C TYPICAL EXTERIOR COLUMN FOOTING
SCALE: 1/2" = 1'-0"

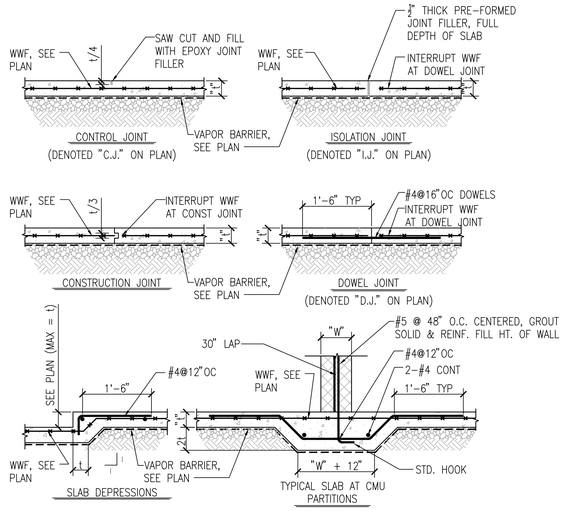

D TYPICAL SLAB ON GRADE DETAILS
SCALE: 3/4" = 1'-0"

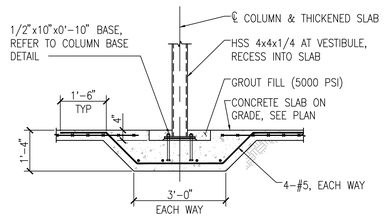

E RECESSED VESTIBULE COLUMN
SCALE: 1/2" = 1'-0"

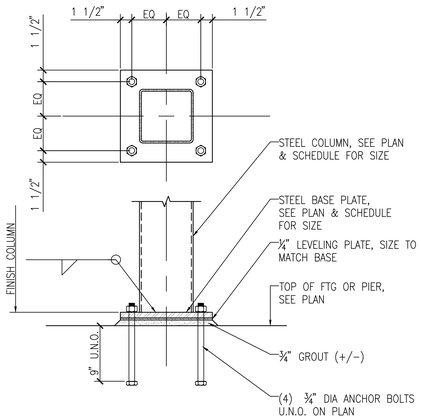

F TYPICAL HSS COLUMN BASE
SCALE: 1 1/2" = 1'-0"

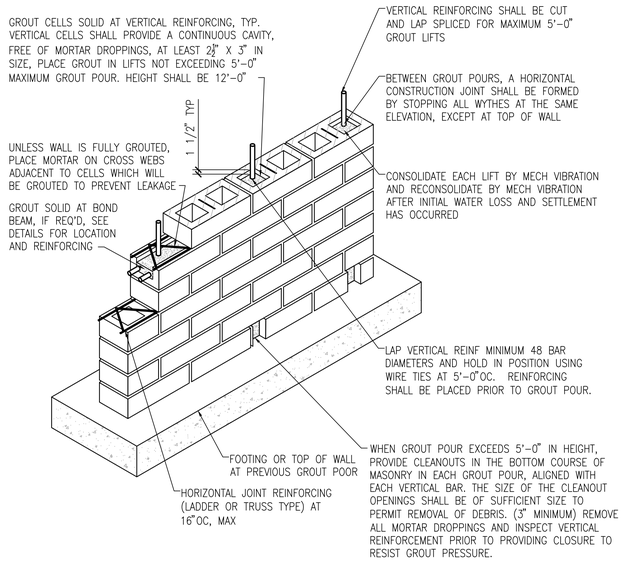

G TYPICAL CMU CONSTRUCTION
SCALE: 1/2" = 1'-0"

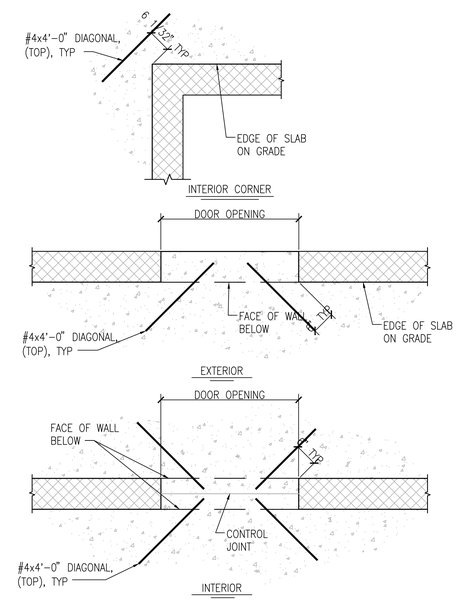

H ADDITIONAL SLAB REINFORCING AT CMU
SCALE: 3/4" = 1'-0"

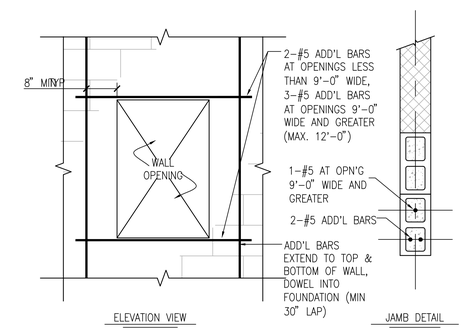

J ADDITIONAL REINF AT CMU WALL OPENING
SCALE: 3/4" = 1'-0"

FINAL SUBMISSION / FULLY SPRINKLERED

Revisions:	Date

CONSULTANTS:

CIVIL:
KENNETH HORNE & ASSOCIATES
7201 NORTH 9TH AVENUE, STE. 6
PENSACOLA, FLORIDA 32504
PH: (850) 471-9005
FX: (850) 471-0093

LANDSCAPE ARCHITECT:
CSA GROUP, INC.
6300 PICCADILLY SQUARE DRIVE
MOBILE, ALABAMA 36609
PH: (251) 344-4023
FX: (251) 344-4052

COMM/IDS:
SCHMIDT CONSULTING GROUP, INC.
40 S. PALAFOX PLACE, STE. 300
PENSACOLA, FLORIDA 32502
PH: (850) 438-0050
FX: (850) 432-8631

SURVEYORS:
KCI TECHNOLOGIES, INC.
10401 HIGHLAND MANOR DRIVE, SUITE 120
TAMPA, FLORIDA 33610
PH: (813) 740-2300

R.W. BOLTON CERTIFICATE NO. 56537 STATE OF FLORIDA PROFESSIONAL ENGINEER

ARCHITECT/ENGINEERS:

BES DESIGN/BUILD

BES DESIGN/BUILD, LLC
766 Middle St, Fairhope, AL 36532
Phone: 251.990.5778 Fax: 251.990.3716

Drawing Title	TYPICAL DETAILS
Approved Project Director	
Project Title	CONSTRUCT VA OUTPATIENT CLINIC, PANAMA CITY
Project Number	520-326
Building Number	-
Location	PANAMA CITY, FLORIDA
Date	APRIL 2013
Checked	NB
Drawn	NB/KM
Drawing Number	SF201
	Dwg. 7 of 17

Office of Construction and Facilities Management

Department of Veterans Affairs

VA FORM 08-6231